55-2840-229-23 P

TM 55-2840-229-23P
NAVAIR 02B-15AC-4
T.O. 2J-T53-14

TECHNICAL MANUAL

AVIATION UNIT AND INTERMEDIATE MAINTENANCE REPAIR PARTS AND SPECIAL TOOLS LIST (INCLUDING DEPOT MAINTENANCE REPAIR PARTS AND SPECIAL TOOLS)

ENGINE, GAS TURBINE

NSN 2840-00-102-3967 (T53-L-11C)
2840-00-102-3968 (T53-L-11D)
2840-00-134-4803 (T53-L-13B)

This copy is a reprint which includes current pages from Change 1.

This manual supersedes TM 55-2840-229-23P/NAVAIR 02B-15AC-4/T.O. 2J-T53-14, 14 February 1979, including all changes.

HEADQUARTERS, DEPARTMENT OF THE ARMY

9 DECEMBER 1981

D 101.11:
READEX
best copy available

CHANGE No. 1

HEADQUARTERS
DEPARTMENT OF THE ARMY
WASHINGTON, D.C., 18 July 1983

Aviation Unit and Intermediate Maintenance Repair Parts and Special Tools List (Including Depot Maintenance Repair Parts and Special Tools)

Engine, Gas Turbine

NSN 2840-00-102-3967 (T53-L-11C)
2840-00-102-3968 (T53-L-11D)
2840-00-134-4803 (T53-L-13B)

TM 55-2840-229-23P/NAVAIR 02B-15AC-4/T.O. 2J-T53-14, 9 December 1981, is changed as follows:

1. Remove and insert pages as indicated below:

Remove pages	Insert pages
54	54
55 and 56	55 and 56
59 and 60	59 and 60
213 thru 216	213 thru 216
249 and 250	249 and 250
---	306.1
309 and 310	309 and 310
329 and 330	329 and 330
353	353

2. New or changed text material is indicated by a vertical bar in the margin. An illustration change is indicated by a miniature pointing hand.

3. Retain this sheet in front of manual for reference purposes.

By Order of the Secretary of the Army:

JOHN A. WICKHAM, JR.
General, United States Army
Chief of Staff

Official:

ROBERT M. JOYCE
Major General, United States Army
The Adjutant General

DISTRIBUTION:
To be distributed in accordance with DA Form 12-31, Organizational Maintenance requirements for UH-1B, UH-1C/M, UH-1D/H, AH-1G, AH-1S (MOD) and (AH-1S) (PROD) aircraft.

TM 55-2840-229-23P
NAVAIR 02B-15AC-4
T.O. 2J-T53-14

HEADQUARTERS
DEPARTMENT OF THE ARMY
WASHINGTON, D.C., 9 December 1981

Aviation Unit and Intermediate Maintenance Repair Parts and Special Tools List (Including Depot Maintenance Repair Parts and Special Tools)
for
ENGINE, GAS TURBINE
T53-L-11C, T53-L-11D, T53-L-13B

NSN 2840-00-102-3967 (T53-L-11C)
2840-00-102-2968 (T53-L-11D)
2840-00-134-4803 (T53-L-13B)

National Stock Numbers Current as of 19 March 1981

REPORTING OF ERRORS

For Navy Only. Recommended manual changes by Naval Activities concerning changes to T53-L-11C; 11D; 13B manuals should be submitted to Commanding Officer, Naval Air Technical Services Facility (TMEP), 700 Robbins Avenue, Philadelphia, PA 19111. For Air Force Only. AFTO Forms 22 will be directed to SAAMA/MMST, Kelly AFB, TX 78241.

REPORTING OF ERRORS

You can improve this manual. If you find any mistake of if you know of a way to improve the procedure, please let us know. Mail your letter, DA Form 2028 (Recommended Changes to Publications and Blank Forms), or DA Form 2028-2 located in the back of this manual directly to Commander, US Army Troop Support and Aviation Materiel Readiness Command, ATTN:DRSTS-MPSD, 4300 Goodfellow Boulevard, St. Louis, MO 63120. A reply will be furnished to you.

TABLE OF CONTENTS

		Listing Page	Illus Figure
Section I.	INTRODUCTION	1	
	Exploded view of engine (T53-L-11C, T53-L-11D)	7	1
	Exploded view of engine (T53-L-13B)	8	1
II.	REPAIR PARTS LIST		
0401	ENGINE GENERAL		
	Engine, Gas turbine	11	2

		Listing Page	Illus Figure
0402	COMPRESSOR SECTION		
	Impeller housing assembly and interstage bleed compressor housing assembly	13	3
	Compressor housing and rotor assembly and related parts	17	4
	Compressor rotor assembly (T53-L-11C, T53-L-11D)	19	5
	Compressor rotor assembly (T53-L-13B)	23	6
	Inlet housing assembly	27	7
	Overspeed governor and tachometer drive assembly	31	8
	Overspeed governor and tachometer drive assembly	33	9
	Interstage air bleed and compressor and impeller housing assembly	37	10
	Interstage air bleed lines and related parts (T53-L-11C, T53-L-11D)	39	11
	Interstage air bleed lines (T53-L-13B)	41	12
	Interstage bleed actuator assembly	43	13
	Air inlet guide vane actuator hose assembly and related parts (T53-L-13B)	46	14
	Actuator assembly, inlet guide vane (T53-L-13B)	49	15
0403	COMBUSTION SECTION		
	Diffuser housing, rear bearing cover, combustion turbine assembly and related parts (T53-L-11C, T53-L-11D)	51	16
	Diffuser housing assembly and rear bearing housing (T53-L-13B)	55	17
	Combustion turbine assembly (T53-L-11C, T53-L-11D)	59	18
	Turbine assembly, combustion (T53-L-13B)	61	19
	Combustion chamber assembly (T53-L-11C, T53-L-11D)	65	20
	Combustion chamber assembly (T53-L-13B)	67	21
0404	POWER TURBINE		
	Turbine nozzle and cylinder assembly (T53-L-11C, T53-L-11D)	69	22
	Rotor assemblies, gas producer nozzle and cylinder (T53-L-13B)	72	23
	Second stage turbine assembly (T53-L-11C, T53-L-11D)	75	24
	Turbine rotor and bearing housing assembly (T53-L-13B)	79	25
0405	ACCESSORY GEAR BOX		
	Accessory gearbox assembly	83	26
	Gearbox assembly, accessory	85	27
	Cover, accessory gearbox	89	28
	Output reduction carrier and gear assembly, inlet housing and related parts	91	29
	Carrier and gear assembly	95	30
	Variable inlet guide vane assembly and related parts (T53-L-13B)	99	31
	Accessory drive carrier assembly	102	32
0406	FUEL SYSTEM		
	Fuel control and related parts (T53-L-11C, T53-L-11D)	105	33
	Fuel control and related parts (T53-L-13B)	107	34

		Listing Page	Illus Figure
	Fuel control, main turbine (T53-L-11C, T53-L-11D)	109	35
	Fuel control, main turbine (T53-L-13B)	112	36
	Fuel housing assembly (T53-L-11C, T53-L-11D)	119	37
	Fuel housing assembly (T53-L-13B)	130	38
	Governor assembly, overspeed	137	39
	Changeover valve assembly (T53-L-13B)	143	40
	Computer assembly	148	41
	RPM Computer shaft assembly	155	42
	Multiplier assembly, PI (T53-L-11C, T53-L-11D)	157	43
	Multiplier assembly, PI (T53-L-13B)	161	44
	Rockshaft assembly (T53-L-11C, T53-L-11D)	165	45
	Rockshaft assembly (T53-L-13B)	167	46
	Cover assembly (T53-L-11C, T53-L-11D)	170	47
	Cover assembly, fuel control (T53-L-13B)	174	48
	Pump assembly	177	49
	Main fuel system and combustion chamber drain valve assembly (T53-L-11C, T53-L-11D)	179	50
	Manifold assembly (T53-L-11C, T53-L-11D)	181	51
	Fuel system and combustion chamber drain valve assembly (T53-L-13B)	184	52
	Starting fuel system (T53-L-11C, T53-L-11D)	188	53
	Nozzle assembly, starting (T53-L-11C, T53-L-11D)	191	54
0407	ELECTRICAL SYSTEM		
	Ignition system (T53-L-11C, T53-L-11D)	193	55
	Ignition system (T53-L-13B)	195	56
	Electrical cable assembly and exhaust thermocouple (T53-L-11C, T53-L-11D)	197	57
	Electrical cable assembly and exhaust thermocouple (T53-L-13B)	199	58
	Valve solenoid, anti-icing	201	59
	Valve assembly, hot air	203	60
	Valve solenoid, anti-icing	205	61
0408	OIL SYSTEM		
	Pump, rotary	207	62
	External oil lines (T53-L-11C, T53-L-11D)	210	63
	External oil lines (T53-L-13B)	213	64
	Filter, fluid pressure	215	65
	Valve assembly, flow divider (T53-L-13B)	217	66
	Pump, rotary	219	67
	Complete engine repair kits for Navy Use Only (not illustrated)	219	68
50	REPAIR KITS	221	
60	BULK MATERIALS	222	
Section III.	SPECIAL TOOLS LIST	225	
Section IV.	NATIONAL STOCK NUMBER AND PART NUMBER INDEX	307	
	National Stock Number and Part Number Supplementary Index	353	

Section I. INTRODUCTION

1. Scope.

a. This manual lists repair parts; special tools; test, measurement, and diagnostic equipment (TMDE); and other support equipment required for operation and performance of Aviation Unit Maintenance (AVUM), Aviation Intermediate Maintenance (AVIM), and depot maintenance of the ENGINE, GAS, TURBINE, T53-L-11C, T53-L-11D, T53-L-13B.

b. For Navy Only. This manual together with NAVAIR 02B-15AC-6-1, NAVAIR 02B-15AC-6-4, NAVAIR 02B-15AC-6-5, and NAVAIR 02B-15AB-2 comprise maintenance and illustrated parts breakdown information for Navy T53 Engines.

c. For Air Force Only. This manual comprises Maintenance and illustrated Parts Breakdown information for Air Force T53 series engines.

NOTE

For detailed information concerning AVUM/AVIM Maintenance Concept, refer to Appendix B, TM 55-2840-229-23.

2. General.

This Repair Parts and Special Tools List is divided into the following sections:

a. Section II. Repair Parts List. A list of repair parts authorized for use in the performance of maintenance. The list also includes parts which must be removed for replacement of the authorized parts. This section is arranged by functional group, with the parts in each group listed in figure and item number sequence. Items are indented when required to indicate the relationship to the next higher assembly. The illustrations in this section will appear immediately preceding each figure of text. Items which are not assigned SMR codes appear for informational purposes only and are not to be requisitioned.

b. Section III. Special Tools List. A list of special tools, TMDE, and support equipment authorized for the performance of maintenance. This section, which is arranged in figure and item number sequence, contains Engine Tools (figure numbers are prefixed E). The illustrations will appear immediately following the text portion.

c. Section IV. National Stock Number and Part Number Index. A list, in ascending National Item Identification Number (NIIN) sequence, of all National stock numbers appearing in the listings, followed by a list, in alphameric sequence, of all part numbers appearing in the listings. National stock numbers and part numbers are cross-referenced to each illustration figure and item number appearance.

3. Explanation of Columns.

The following provides an explanation of columns found in the tabular listings:

a. Illustration. This column is divided as follows:

(1) Figure Number. Indicates the figure number of the illustration in which the item is shown. An alpha designator in this column indicates a specific functional group as follows:

KITS - Functional Group 50.

BULK - Functional Group 60.

(2) Item Number. The number used to identify each item called out in the illustration.

b. Source, Maintenance, and Recoverability Codes (SMR).

(1) Source Code. Source codes are assigned to support items to indicate the manner of acquiring support items for maintenance, repair, or overhaul of end items. Source codes are entered in the first and second positions of the Uniform SMR Code format as follows:

Code	*Definition*
PA	Item procured and stocked for anticipated or known usage.
PB	Item procured and stocked for insurance purpose because essentiality dictates that a minimum quantity be available in the supply systems.
PC	Item procured and stocked and which otherwise would be coded PA except that it is deteriorative in nature.
PD	Support item, excluding support equipment, procured for initial issue or outfitting and stocked only for subsequent or additional initial issues or outfittings. Not subject to automatic replenishment.

Code	Definition
PE	Support equipment procured and stocked for initial issue or outfitting to specified maintenance repair activities.
PF	Support equipment which will not be stocked but which will be centrally procured on demand.
PG	Item procured and stocked to provide for sustained support for the life of the equipment. It is applied to an item, peculiar to the equipment which, because of probable discontinuance or shutdown of production facilities, would prove uneconomical to reproduce at a later time.
KD	An item of a depot overhaul/repair kit and not purchased separately. Depot kit defined as a kit that provides items required at the time of overhaul or repair.
KF	An item of a maintenance kit and not purchased separately. Maintenance kit defined as a kit that provides an item that can be replaced at Aviation Unit Maintenance (AVUM) or Aviation Intermediate Maintenance (AVIM) levels.
KB	Item included in both a depot overhaul/repair kit and a maintenance kit.
MO	Item to be manufactured or fabricated at Aviation Unit Maintenance (AVUM) level.
MF	Item to be manufactured or fabricated at Aviation Intermediate Maintenance (AVIM) level.
MD	Item to be manufactured or fabricated at the depot maintenance level.
AO	Item to be assembled at Aviation Unit Maintenance (AVUM) level.
AF	Item to be assembled at Aviation Intermediate Maintenance (AVIM) level.
AD	Item to be assembled at depot maintenance level.
XA	Item is not procured or stocked because the requirements for the item will result in the replacement of the next higher assembly.
XB	Item is not procured or stocked. If not available through salvage, requisition.
XC	Installation drawing, diagram, instruction sheet, field service drawing that is identified by manufacturer's part number.
XD	A support item that is not stocked. When required, item will be procured through normal supply channels.

NOTE

Cannibalization or salvage may be used as a source of supply for any items source coded above except those coded XA, and aircraft support items as restricted by AR 700-42.

(2) Maintenance Code Maintenance codes are assigned to indicate the levels of maintenance authorized to USE and REPAIR support item. The maintenance codes are entered in the third and fourth positions of the Uniform SMR Code format as follows:

(a) The maintenance code entered in the third position will indicate the lowest maintenance level authorized to remove, replace, and use the support item. The maintenance code entered in the third position will indicate one of the following levels of maintenance:

Code	Application/Explanation
O	Support item is removed, replaced, used at the Aviation Unit Maintenance (AVUM) level.
F	Support item is removed, replaced, used at the Aviation Intermediate Maintenance (AVIM) level.
D	Support items that are removed, replaced, used at depot, mobile depot, specialized repair activity only.

(b) The maintenance code entered in the fourth position indicates whether the item is to be repaired and identifies the lowest maintenance

level with the capability to perform complete repair (i.e., all authorized maintenance functions). This position will contain one of the following maintenance codes:

Code	Application/Explanation
O	The lowest maintenance level capable of complete repair of the support item is the Aviation Unit Maintenance (AVUM) level.
F	The lowest maintenance level capable of complete repair of the support item is the Aviation Intermediate Maintenance (AVIM) level.
D	The lowest maintenance level capable of complete repair of the support item is the depot level, performed by depot, mobile depot or specialized repair activity.
L	Repair restricted to designated specialized repair activity.
Z	Nonreparable. No repair is authorized.
B	No repair is authorized. The item may be reconditioned by adjusting, lubricating, etc., at the user level. No parts or special tools are procured for the maintenance of this item.

(3) Recoverability Code. Recoverability codes are assigned to support items to indicate the disposition action on unserviceable items. The recoverability code is entered in the fifth position of the Uniform SMR Code format as follows:

Code	Definition
Z	Nonreparable item. When unserviceable, condemn and dispose at the level indicated in position 3.
O	Reparable item. When uneconomically reparable, condemn and dispose at Aviation Unit Maintenance (AVUM) level.
F	Reparable item. When uneconomically reparable, condemn and dispose at Aviation Intermediate Maintenance (AVIM) level.
D	Reparable item. When beyond lower level repair capability, return to depot. Condemnation and disposal not authorized below depot level.
L	Reparable item. Repair, condemnation, and disposal not authorized below depot/specialized repair activity level.
A	Item requires special handling or condemnation procedures because of specific reasons (i.e., precious metal content, high dollar value, critical material or hazardous material). Refer to appropriate manuals/directives for specific instructions.

c. National Stock Number. Indicates the National stock number assigned to the item and will be used for requisitioning purposes.

d. Part Number. Indicates the primary number used by the manufacturer (individual, company, firm, corporation, or Government activity), which controls the design and characteristics of the item by means of its engineering drawings, specifications, standards, and inspection requirements, to identify an item or range of items.

NOTE

When a stock numbered item is requisitioned, the repair part received may have a different part number than the part being replaced.

e. Federal Supply Code for Manufacturer (FSCM). The FSCM is a 5-digit numeric code listed in SB 708-42 which is used to identify the manufacturer, distributor, or Government agency, etc.

f. Description. Indicates the Federal item name and any additional description required to identify the item. This column will also contain the Basis of Issue (BOI) for Special Tools.

g. Unit of Measure (U/M). Indicates the standard of the basic quantity of the listed item as used in performing the actual maintenance function. This measure is expressed by a two-character alphabetical abbreviation (e.g., ea, in, pr, etc.). When the unit of measure differs from the unit of issue, the lowest unit of issue that will satisfy the required units of measure will be requisitioned.

h. ***Quantity Incorporated in Unit.*** Indicates the quantity of the item required for one assembly only, including instances when similar assemblies are broken down together. A "V" appearing in this column in lieu of a quantity indicates that no specific quantity is applicable (e.g., shims, spacers, etc.). When parts are shown as attaching two or more items, the quantity of these parts are those necessary to attach only one of the items.

4. **Special Information.**

a. Usable on codes are shown in the description column. Uncoded items are applicable to all models. Identification of the usable on codes used in this publication are:

Code	*Used On*
EZ6	T52-L-11C
EZ7	T53-L-11D
EZL	T53-L-13B

b. Detailed manufacturing instructions for items source coded to be manufactured or fabricated (MO, MF, MD) are found in the applicable maintenance manuals. Bulk materials required to manufacture items are listed in the Bulk Material Group of this manual.

c. In the parts list, some items are indented to show that they are a component or components of the item under which they are indented.

d. The following publications pertain to the ENGINE MODELS T53-L-11C, T53-L-11D, T53-L 13B and its components:

Publication and Short Title

TB 55-1500-307-25	Aircraft Components Requiring Management and Historical Data
TM 55-2840-229-23-1, 23-2/T.O. 2J-53-16	Maintenance Organizational, DS and GS Engine, Shaft Turbine
TM 55-1500-204-25/1	General Aircraft Maintenance Manual
TM 55-405-10	Army Aviation Maintenance Engineering Manual

e. For Navy Only. Navy Intermediate Maintenance. The symbols for Code O and Code F will support the requirements for Navy Intermediate Maintenance activities. Code D items will support those activities that are equipped to perform COMPLETE ENGINE REPAIR in accordance with instructions contained in Intermediate Maintenance Manuals NAVAIR 002B-15AB-2 and NAVAIR 02B-15AC-6-1.

f. For Air Force Only. For organizational and base level maintenance activities: Army Code O will support AF Codes B and F; Army Code F will support AF Code D; Army Code D will support AF Code L. The following information may be used for determining compatability between Army expendability recoverability, and USAF EPRC codes.

USA ERC	USAF ERRC
H	XFB (P) XF 2 (X)
D	XD2 (T)
A	Requires Individual Determination

g. Oversize and undersize parts, such as studs, bushings, etc., are listed immediately after the standard size part and in the same indent. The degree of oversize or undersize is stated in the description. These parts will not have a required quantity shown.

h. When an item has been replaced, issue will continue to be made until existing stocks become exhausted except in the case when replacement is limited to one-way use. To insure complete exhaustion of stock on hand and if it is acceptable to use a replaced item, the replaced item should be requisitioned. To denote one- or two-way replacement, mnemonic codes will be used in the description as follows: The replaced item(s) will always contain the mnemonic code RPL-BY. The replacing item, if it is a two-way replacement, will contain the mnemonic code RPLS. If it is a one-way replacement, no code will be used. Additional mnemonic codes (para 6), are used to reflect the status and relationship of items similar or related items used in the end article (e.g., OBS-BY, ASSYFR, OBS-AFT-COMPL-W).

i. When details of an assembly are shown on another text page, the description of that assembly is followed by a notation stating where these details can be located. "Example: 28040, Valve, Solenoid Anti Icing. See figure 61 for Breakdown." The parts that make up the Valve, Solenoid Anti Icing will be found on the text listing for figure 61.

j. When a Source Control Number is requisitioned, several vendor items can be under this number; allowing the most economical item on hand to be shipped.

k. When an item has limited effectivity within a model, the limitation will be indicated by an entry following the item description.

l. Directional references left and right are determined by standing at the rear of the aircraft or engine and looking forward.

5. How to Locate Repair Parts.

a. When National Stock Number or Part Number is Unknown:

(1) First. Using the table of contents, determine the assembly group within which the repair part belongs. This is necessary since illustrations are prepared for assembly groups, and listings are divided into the same groups.

(2) Second. Find the illustration covering the assembly group to which the repair part beongs.

(3) Third. Identify the repair part on the illustration and note the illustration figur and item number of the repair part.

(4) Fourth. Using the Repair Parts Listing, find the figure and item number noted on the illustration.

b. When National Stock Number or Part Number is Known:

(1) First. Using the Index of National Stock Numbers and Part Numbers, find the pertinent National Stock Number or part number. This index is in ascending National Item Identification Number (NIIN) sequence followed by a list of part numbers in ascending alphameric sequence, cross-referenced to the illustration figure number and item number.

(2) Second. After finding the figure and item number, locate the figure and item number in the repair parts list.

6. Abbreviations (Mnemonic Codes).

Abbreviations	***Explanation***
AN	Air Force-Navy
ANPT	Aeronautical national taper pipe thread
APLTO	Applicable to
ASSYFR	Assemble from
AV	Twenty-five
AWG	American wire gage
AX	Twenty
BE	Bale
BKDN	Breakdown
BRKDWN	Breakdown into
BT	Bottle
BTU	British thermal unit(s)
BX	Box
CC	Cubic centimeter(s)
CFM	Cubic feet per minute
CFS	Cubic feet per second
CI	Cubic inch
CK	Cake
CN	Can
CNSWTH	Consolidated with
C/O	Consists of (component of)
CP	Candle power
CRES	Corrosion resistant steel
CW	Continuous wave(s)
DEG	Degree(s)
DR	Drum
EA	Each
FIG	Figure
FT	Foot
GL	Gallon
GPH	Gallons per hour
GR	Gross
HD	Hundred
IN	Inch
INTRCH	Interchangeable with
KC	Kolocycle(s)
KT	Kit
KW	Kilowatt(s)
LB	Pound
LH	Left-hand
MASTER	Master item
MIN	Minimum
MWO	Modification work order
MX	Thousand
NAS	National aircraft standard
NC	American national coarse thread
NEF	American national fine thread
NF	American national fine thread
NHA	Next higher assembly
NS	American national special thread
O/A	Over-all
OBS-AFT CMPT-W	Obsolete after compliance with
OBS-BY	Obsoleted by
OBSLTS	Obsoletes
PC	Piece
PG	Package
PK	Pack
PORM	Plus or minus
PSI	Pounds per square inch
PT	Pint
REWKTO	Rework to

Abbreviations	*Explanation*
RH	Right-hand
RMKS	Remarks
RO.................	Roll
RPL-BY...........	Replaced by
RPLS	Replaces
SE.................	Set
SF	Square foot
SH.................	Sheet
SI	Square inch
SL.................	Spool
SPEC.............	Specification(s)
SX.................	Stick
TRNSTO..........	Transfer to
TU.................	Tube
U/O	Used on
USBL EFF	Usable effectivity
USE-AFT-COMPL-W	Use after compliance with
USE-UNTIL CMPL-W..........	Use until compliance with
U/W	Used with
W..................	Watt(s)
W/.................	With
WHEN EXHTD RQTN NHA.......	When exhausted requisition next higher assembly
W/O	Without

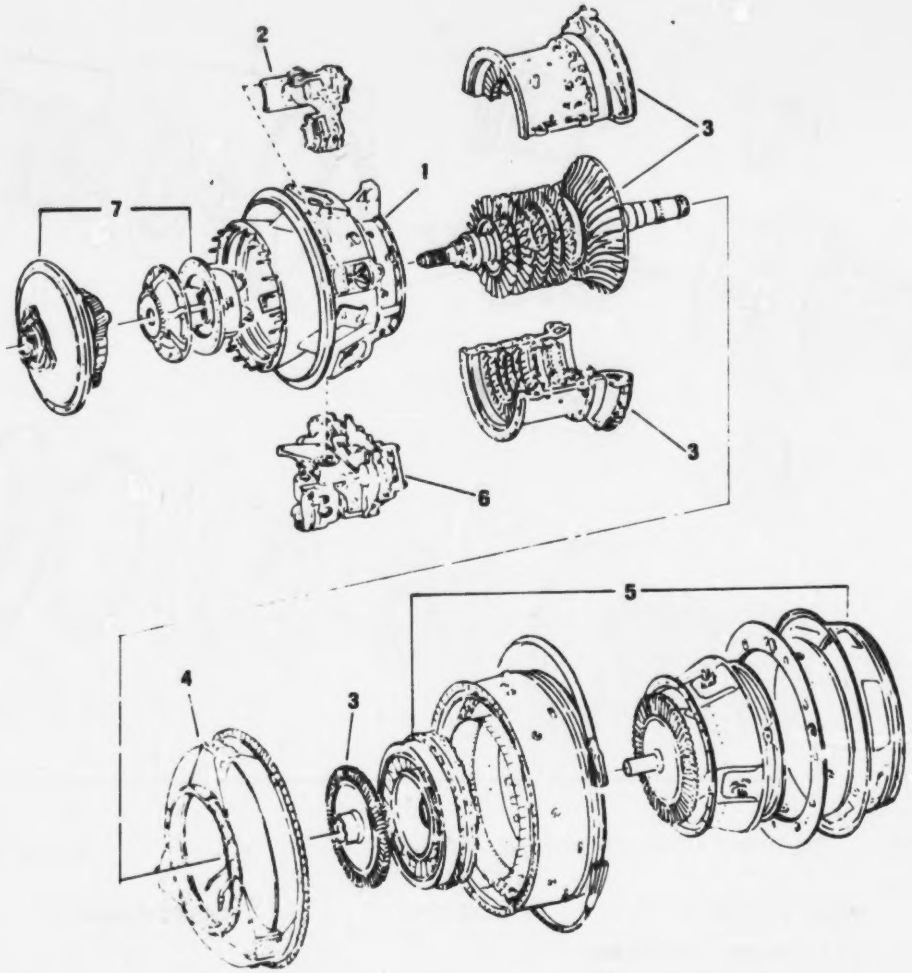

Figure 1. Exploded View of Engine (T53-L11C and 11D) (Sheet 1 of 2)

INDEX NUMBER	FIGURE TITLE	FIGURE NUMBER
1	INLET HOUSING ASSEMBLY	7
2	OVERSPEED GOVERNOR AND TACHOMETER DRIVE ASSEMBLY	9
3	INTERSTAGE AIR BLEED AND COMPRESSOR AND IMPELLER HOUSING ASSEMBLY	10
4	DIFFUSER HOUSING, REAR BEARING COVER, COMBUSTION TURBINE ASSEMBLY AND RELATED PARTS	16
5	COMBUSTION TURBINE ASSEMBLY	18
6	ACCESSORY GEARBOX ASSEMBLY	26
7	OUTPUT REDUCTION CARRIER AND GEAR ASSEMBLY	29

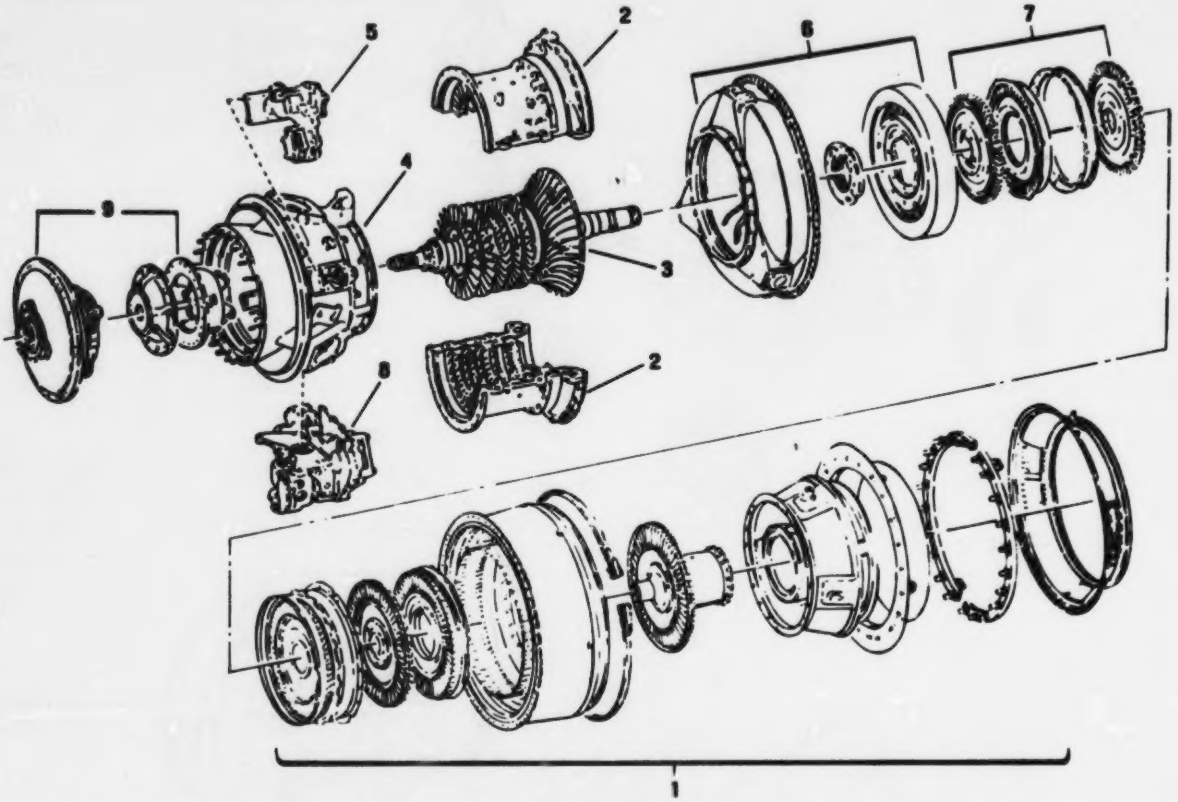

Figure 1. Exploded View of Engine (T53-L-13B) (Sheet 2 of 2)

INDEX NUMBER	FIGURE TITLE	FIGURE NUMBER
1	ENGINE, GAS TURBINE	2
2	IMPELLER HOUSING ASSEMBLY AND INTERSTAGE BLEED COMPRESSOR HOUSING ASSEMBLY	3
3	COMPRESSOR ROTOR ASSEMBLY	6
4	INLET HOUSING ASSEMBLY	7
5	OVERSPEED GOVERNOR AND TACHOMETER DRIVE ASSEMBLY	9
6	DIFFUSER HOUSING ASSEMBLY AND REAR BEARING HOUSING	17
7	ROTOR ASSEMBLIES, GAS PRODUCER NOZZLE AND CYLINDER	23
8	GEARBOX ASSEMBLY, ACCESSORY	27
9	CARRIER AND GEAR ASSEMBLY	30

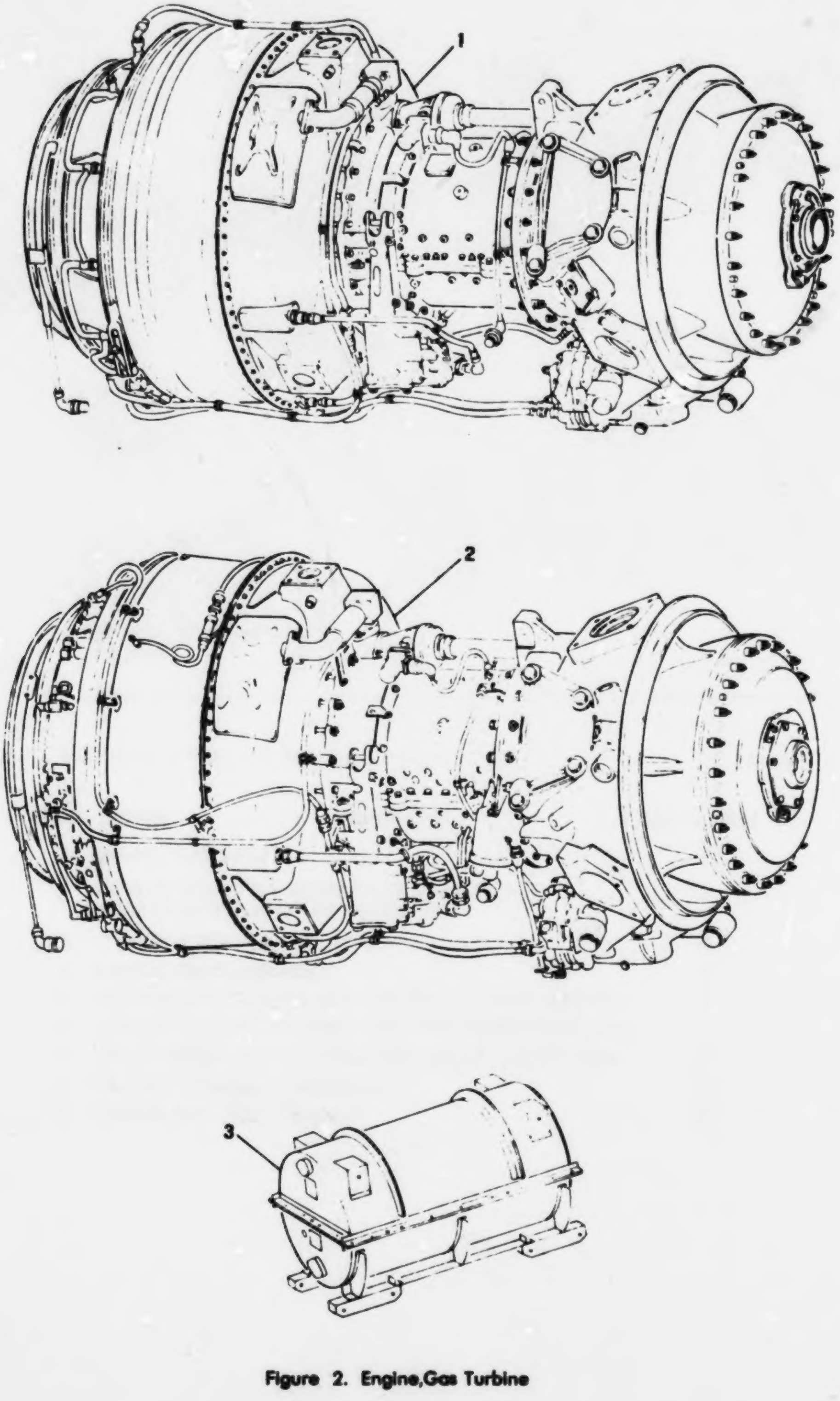

Figure 2. Engine,Gas Turbine

(1) ILLUSTRATION (a) FIG NO	(b) ITEM NO	(2) SMR CODE	(3) NATIONAL STOCK NUMBER	(4) FSCM	(5) PART NUMBER	(6) DESCRIPTION USABLE ON CODE	(7) U/M	(8) QTY INC IN UNIT
						GROUP 0401 ENGINE GENERAL		
						ENGINE,GAS TURBINE		
2	1			51547	1-000-0S0-12	ENGINE,GAS TURBINE T53-L-11C E76	EA	1
2	1			51547	1-000-0S0-13	ENGINE,GAS TURBINE T53-L-11C E77	EA	1
2	2	PAODD	2840-00-134-4803	51547	1-000-060-10	ENGINE,GAS TURBINE T53-L-13B E7L	EA	1
2	3	PDFDD	8145-00-772-7870	81996	8115CCN024-3	SHIPPING AND STORAGE CONTAINER	EA	1

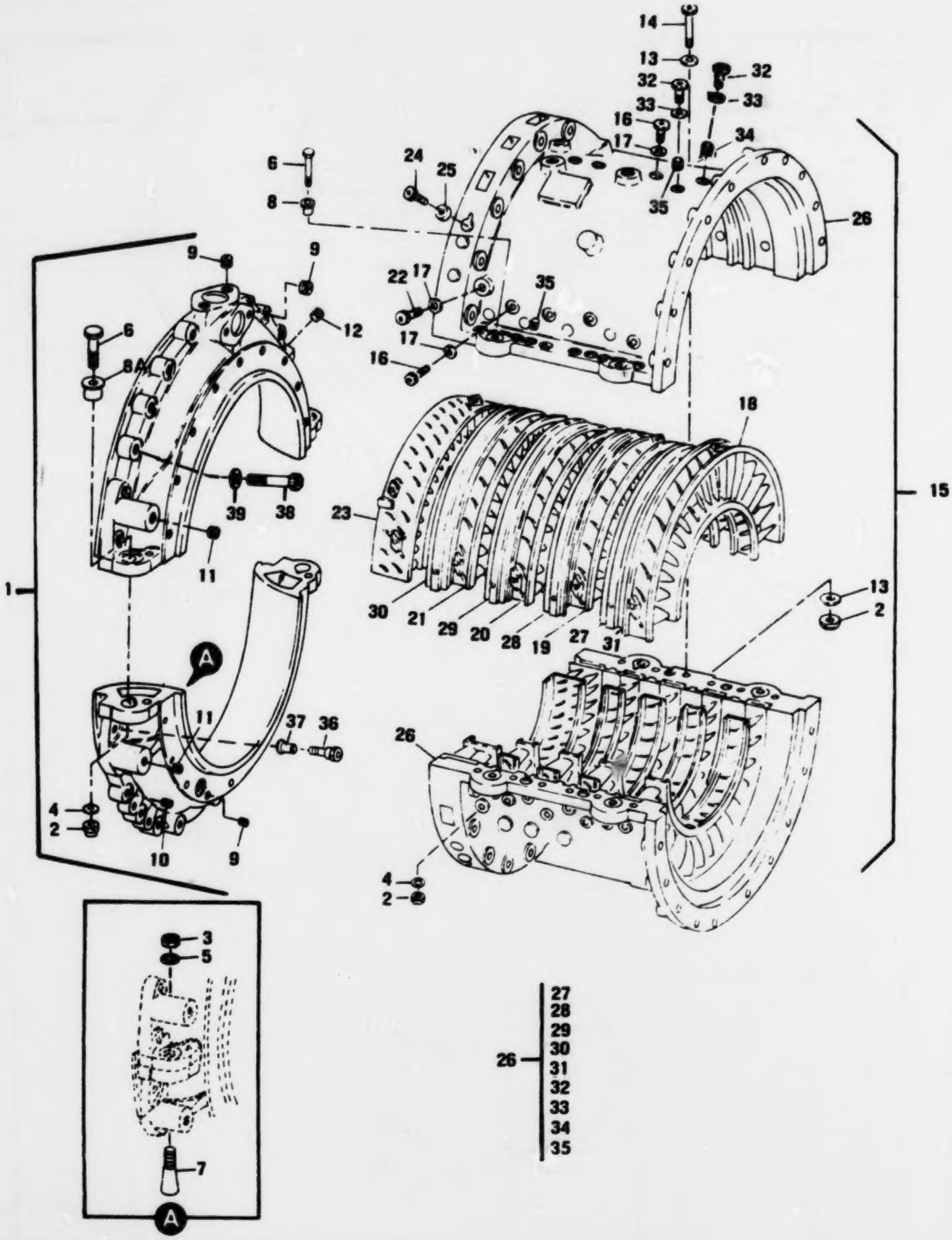

Figure 3. Impeller Housing Assembly And Interstage Bleed Compressor Housing Assembly

(1) ILLUSTRATION (a) FIG NO.	(b) ITEM NO.	(2) SMR CODE	(3) NATIONAL STOCK NUMBER	(4) FSCM	(5) PART NUMBER	(6) DESCRIPTION USABLE ON CODE	(7) U/M	(8) QTY INC IN UNIT
						GROUP 0402 COMPRESSOR SECTION		
						IMPELLER HOUSING ASSEMBLY AND INTERSTAGE		
						BLEED COMPRESSOR HOUSING ASSEMBLY		
3	1	PAOOD	2840-01-008-5730	51547	1-101-370-03	CASE,CENTRIFUGAL CO IMPELLER U/W ADAPTER PN 1-170-710-02...	EA	1
3	2	PAOZZ	5310-00-807-1468	96906	MS21042-4	.NUT,SELF-LOCKING,EX	EA	24
3	2	PAOZZ	5310-00-115-6212	51547	STD3064-4	.NUT,SELF-LOCKING,EX U/C PN 1-101-370-03 F71	EA	6
3	3	PAOZZ	5310-00-807-1467	96906	MS21042-3	.NUT,SELF-LOCKING,EX F76,F77	EA	6
3	4	PAOZZ	5310-00-582-5677	96906	MS15795-810	.WASHER,FLAT	EA	1
3	5	PAOZZ	5310-00-167-0885	88044	AN975-3	.WASHER,RECESSED F76	EA	6
3	6	PAOZZ	5306-00-638-5747	88044	AN101117	.BOLT,MACHINE F76,F77	EA	6
3	6	PAOZZ	5306-00-235-7358	96906	MS9515-17	.BOLT,MACHINE F71	EA	6
3	6	PAOZZ	5306-01-013-2562	96906	MS9915-11	.BOLT,MACHINE U/C PN 1-101-370-03 F71	EA	6
3	7	PAOZZ	5315-00-258-1032	88044	AN386-2-6A	.PIN,TAPERED,THRE F76,F77	EA	6
3	8	PAOZZ	5340-00-067-8304	51547	1-100-186-01	.INSERT,SCREW THREAD	EA	6
3	8A	PAOZZ	5340-01-010-1514	51547	1-100-538-01	.INSERT,SCREW THREAD U/C PN 1-101-370-03 F71	EA	2
3	9	PAFZZ	5340-00-250-4502	96906	MS124776	.INSERT,SCREW THREAD	EA	22
3	10	PAFZZ	5340-00-251-3464	96906	MS21208F4-15	.INSERT,SCREW THREAD	EA	1
3	11	PAFZZ	5340-00-251-3452	96906	MS21208F6-15	.INSERT,SCREW THREAD	EA	[illegible]
3	12	PAFZZ	5340-00-557-3302	96906	MS21208F1-15	.INSERT,SCREW THREAD	EA	1
3	13	PAOZZ	5310-00-167-0835	88044	AN960-416L	.WASHER,FLAT	EA	42
3	14	PAOZZ	5306-00-638-5834	88044	AN101115	.BOLT,MACHINE F76,F77	EA	14
3	14	PAOZZ	5306-00-760-7255	96906	MS9515-15	.BOLT,MACHINE F71	EA	14
3	15	ADDCD		51547	1-100-080-06	CASE AXIAL COMPRESS SEE FIG.10 FOR NHA F76,F77	EA	1
3	15	ADDCD		51547	1-100-140-09	CASE ASSEMBLY SEE FIG. 10 FOR NHA F71	EA	1
3	16	PAFZZ	5306-00-282-3333	88044	AN103706	.BOLT,MACHINE	EA	24
3	17	PAOZZ	5310-00-167-0812	88044	AN960C10L	.WASHER,FLAT	EA	24
3	18	PAFZZ	2840-00-538-3851	51547	1-101-000-01	.VANE ASSEMBLY,STATO F76,F77	EA	1
3	18	PAFZZ	2840-00-546-2416	51547	1-101-110-07	.VANE ASSEMBLY,STATO F71	EA	1
3	19	PAFZZ	2840-00-538-3850	51547	1-101-010-01	.VANE ASSEMBLY,STATO F76,F77	EA	1
3	19	PAFZZ	2840-00-525-5834	51547	1-101-120-03	.VANE ASSEMBLY,STATO F71	EA	1
3	20	PAFZZ	2840-00-525-5621	51547	1-101-020-01	.VANE ASSEMBLY,STATO	EA	1
3	21	PAFZZ	2840-00-525-5644	51547	1-101-030-01	.VANE ASSEMBLY,STATO	EA	1
3	22	PAFZZ	5306-00-258-2808	88044	AN103710	.BOLT,MACHINE	EA	[illegible]
3	23	PAFZZ	2840-00-525-5620	51547	1-101-040-01	.VANE ASSEMBLY,STATO	EA	1
3	24	PAFZZ	2840-00-527-2033	51547	1-100-214-03	.BOLT,SPECIAL,SOCKET	EA	4
3	25	PAFZZ	2840-00-331-8516	51547	1-080-028-03	.RETAINER,BOLT,COMPR	EA	4
3	26	PAOOD	2840-01-008-5725	51547	1-101-210-04	.CASE,ASSEMBLY F71	EA	1
3	27	MDDZZ		51547	1-100-454-06	..INSERT,COMPRESSOR H	EA	1
3	28	MDDZZ		51547	1-100-454-07	..INSERT,COMPRESSOR H	EA	1

(1) ILLUSTRATION		(2)	(3)	(4)	(5)	(6) DESCRIPTION	(7)	(8)
(a) FIG NO	(b) ITEM NO	SMR CODE	NATIONAL STOCK NUMBER	FSCM	PART NUMBER	USABLE ON CODE	U/M	QTY INC IN UNIT
3	29	MDDZZ		51547	1-100-454-08	..INSERT,COMPRESSOR H.....................................	EA	1
3	30	MDDZZ		51547	1-100-454-09	..INSERT,COMPRESSOR H.....................................	EA	1
3	31	MDDZZ		51547	1-100-454-10	..INSERT,HOUSING COMP.....................................	EA	1
3	32	PADZZ	5305-00-966-2431	51547	1-100-462-01	..SCREW,CAP,SOCKET HE U/W PN 1-100-454-06,-07,-08 & -09.....	EA	40
3	32	PADZZ	5305-00-105-0530	51547	1-100-462-02	..SCREW,CAP,SOCKET HE U/W PN 1-100-454-10..................	EA	10
3	33	PADZZ	5310-00-906-3630	51547	1-100-463-01	..WASHER,FLAT U/W PN 1-100-454-06,-07,-08, -09 & -10........	EA	50
3	34	PADZZ	5365-00-044-2854	51547	1-100-374-01	..SPACER,SLEEVE...	EA	10
3	35	PAFZZ	5340-00-288-6600	96906	MS124656	..INSERT,SCREW THREAD.....................................	EA	4
3	36	PADZZ	5306-00-240-6525	51547	1-100-527-01	.BOLT...EZL	EA	12
3	37	PADZZ	3120-00-456-5742	51547	1-100-526-01	.BUSHING,SLEEVE...................................EZL	EA	12
3	38	PADZZ	5306-00-177-5558	96906	MS9530-07	.BOLT,MACHINE...	EA	12
3	39	PADZZ	5310-00-141-1755	88044	AN960-416	.WASHER,FLAT..	EA	12

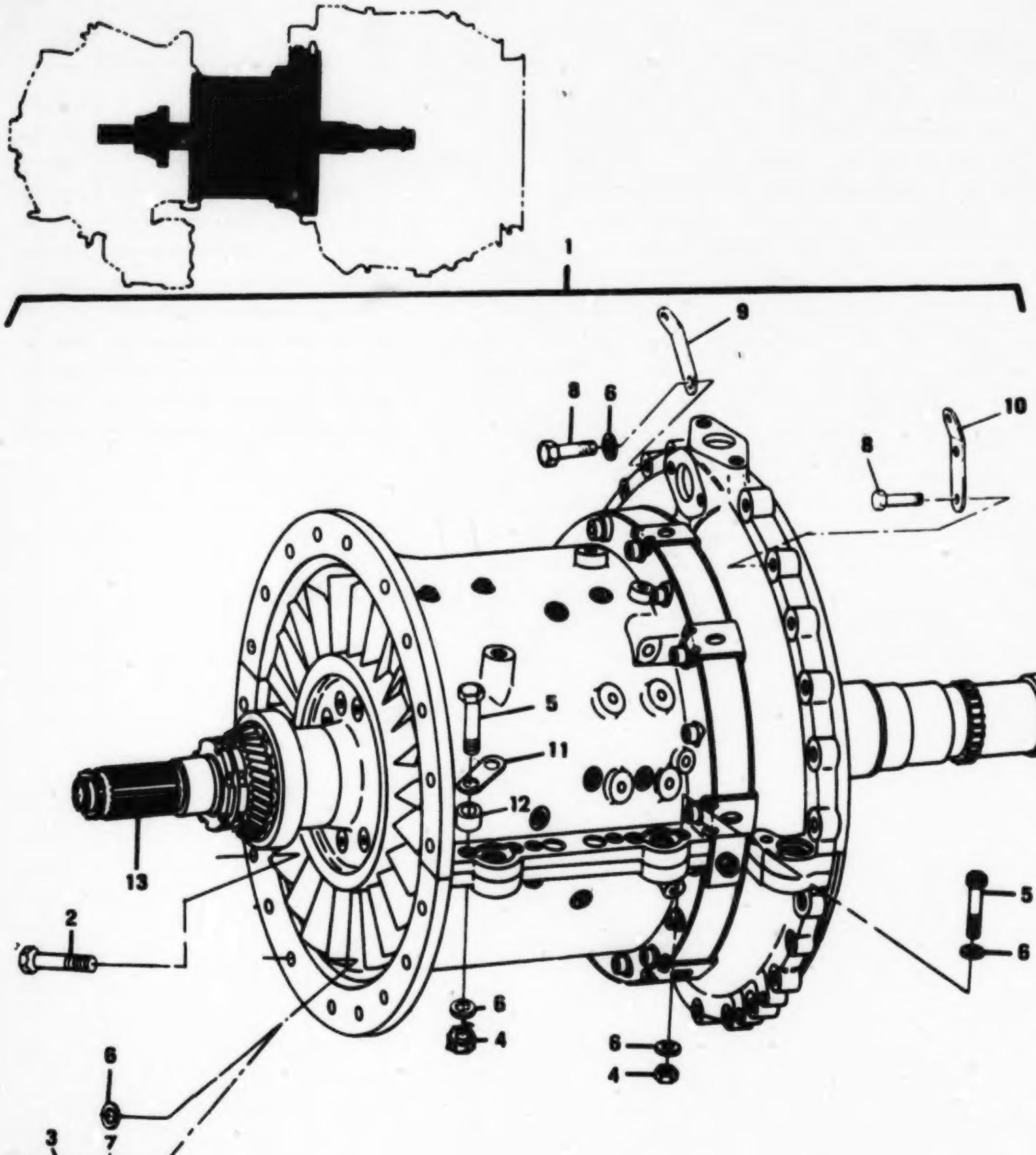

Figure 4. Compressor Housing and Rotor Assembly and Related Parts

(1) ILLUSTRATION (a) FIG NO	(1) ILLUSTRATION (b) ITEM NO	(2) SMR CODE	(3) NATIONAL STOCK NUMBER	(4) FSCM	(5) PART NUMBER	(6) DESCRIPTION USABLE ON CODE	(7) U/M	(8) QTY INC IN UNIT
						GROUP 0402 COMPRESSOR HOUSING AND ROTOR		
						ASSEMBLY AND RELATED PARTS		
4	1	AOFDD		51547	1-100-630-08	CASE AND VANE ASSEM SEE FIG.10 FOR BREAKDOWN..........F26,F27	EA	1
4	1	AOFDD		51547	1-100-640-06	HOUSING SUBASSEMBLY SEE FIG.10 FOR BREAKDOWN..........F21	EA	1
4	2	PAOZZ	5306-00-265-8863	88044	AN101122	BOLT,MACHINE..F26,F27	EA	17
4	2	PAOZZ	5306-00-235-7759	96906	MS9515-22	BOLT,MACHINE..F21	EA	17
4	3	PAOZZ	5306-00-964-2641	51547	1-080-195-01	BOLT,MACHINE..F26,F27	EA	3
4	4	PAOZZ	5310-00-807-1466	96906	MS21042-4	NUT,SELF-LOCKING,EX..	EA	2
4	5	PAOZZ	5306-00-282-0908	88044	AN101120	BOLT,MACHINE..	EA	2
4	6	PAOZZ	5310-00-167-0835	88044	AN960-416L	WASHER,FLAT..F26	EA	37
4	7	PAOZZ	5310-00-555-6519	51547	1-080-186-01	WASHER,FLAT..F26,F27	EA	3
4	8	PAOZZ	5306-00-061-7315	96906	MS9089-25	BOLT,MACHINE..	EA	18
4	9	PAOZZ	5340-00-911-9255	51547	1-160-623-01	BRACKET,ANGLE..F21	EA	2
4	10	PAFZZ	5340-00-913-2871	51547	1-160-624-01	BRACKET,ANGLE..F21	EA	1
4	11	PAOZZ	2840-00-979-3341	51547	1-160-309-01	PLATE,MOUNTING STRA..	EA	1
4	12	PAOZZ	5365-00-064-9424	51547	1-160-607-01	SPACER,SLEEVE..	EA	2
4	13	AODDD		51547	1-100-560-05	ROTOR ASSEMBLY,COMP SEE FIG.5 FOR BREAKDOWN..........F26,F27	EA	1
4	13	XDODD	2840-01-065-4855	51547	1-100-720-40	COMPRESSOR ROTOR,AX SEE FIG.6 FOR BREAKDOWN..........F21	EA	1
4	13	AODFD		51547	1-100-720-45	ROTOR ASSEMBLY COMP SEE FIG.6 FOR BREAKDOWN USE AFT CMPL WITH MWO55-2840-229-50/2..........F21	EA	1

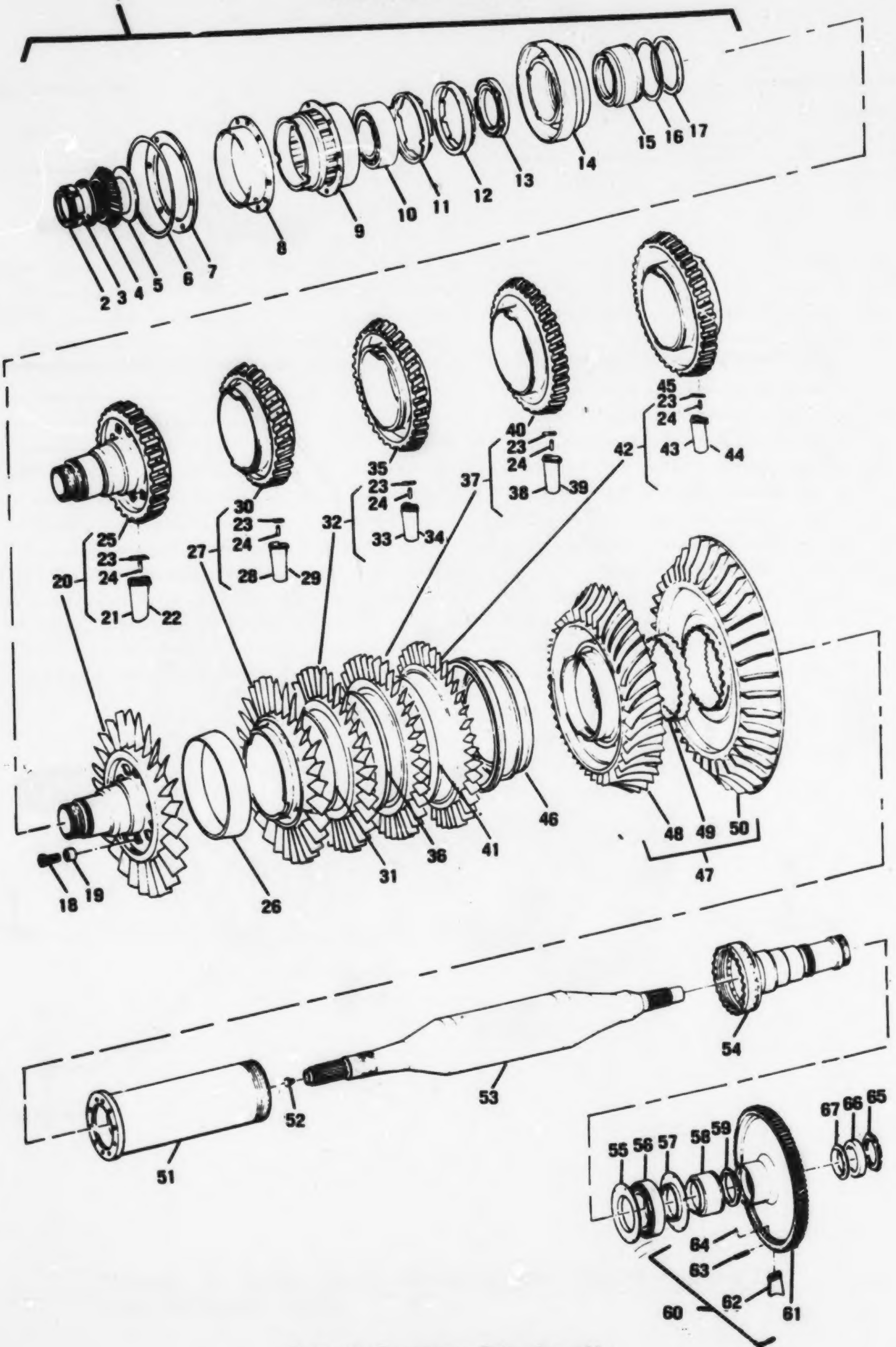

Figure 5. Compressor Rotor Assembly

(1) ILLUSTRATION (a) FIG NO	(b) ITEM NO	(2) SMR CODE	(3) NATIONAL STOCK NUMBER	(4) FSCM	(5) PART NUMBER	(6) DESCRIPTION USABLE ON CODE	(7) U/M	(8) QTY INC IN UNIT
						GROUP 0402 COMPRESSOR ROTOR ASSEMBLY		
						(T53-L-11C,T53-L-11D)		
5	1	AODDD		51547	1-100-560-05	ROTOR ASSEMBLY,COMP SEE FIG.4 FOR NHA................F76,F77	EA	1
5	2	PADZZ	2840-00-855-5475	51547	1-100-580-01	.NUT AND SEAL ASSEMB....................................F76,F77	EA	1
5	3	PADZZ	2840-00-856-6276	51547	1-100-276-01	.RING,LOCK,COMPRESSO....................................F76,F77	EA	1
5	4	PADZZ	3020-00-671-0164	51547	1-100-212-01	.GEAR,BEVEL...F76,F77	EA	1
5	5	PADZZ	5365-00-834-6403	51547	1-100-213-02	.SPACER,RING 0.023 TO 0.0255 IN.THK.....................F76,F77	EA	1
5	5	PADZZ	5365-00-833-1224	51547	1-100-213-03	.SPACER,RING 0.026 TO 0.0285 IN.THK.....................F76,F77	EA	1
5	5	PADZZ	5365-00-834-6402	51547	1-100-213-04	.SPACER,RING 0.029 TO 0.0315 IN.THK.....................F76,F77	EA	1
5	5	PADZZ	5365-00-833-1225	51547	1-100-213-05	.SPACER,RING 0.032 TO 0.0345 IN.THK.....................F76,F77	EA	1
5	5	PADZZ	5365-00-833-1222	51547	1-100-213-06	.SPACER,RING 0.035 TO 0.0375 IN.THK.....................F76,F77	EA	1
5	5	PADZZ	5365-00-833-1221	51547	1-100-213-07	.SPACER,RING 0.038 TO 0.0405 IN.THK.....................F76,F77	EA	1
5	5	PADZZ	5365-00-833-1220	51547	1-100-213-08	.SPACER,RING 0.041 TO 0.0435 IN.THK.....................F76,F77	EA	1
5	5	PADZZ	5365-00-834-6404	51547	1-100-213-09	.SPACER,RING 0.044 TO 0.0465 IN.THK.....................F76,F77	EA	1
5	5	PADZZ	5365-00-833-3527	51547	1-100-213-10	.SPACER,RING 0.047 TO 0.0495 IN.THK.....................F76,F77	EA	1
5	5	PADZZ	5365-00-833-1226	51547	1-100-213-11	.SPACER,RING 0.050 TO 0.0525 IN.THK.....................F76,F77	EA	1
5	5	PADZZ	5365-00-833-1230	51547	1-100-213-12	.SPACER,RING 0.053 TO 0.0555 IN.THK.....................F76,F77	EA	1
5	5	PADZZ	5365-00-435-0067	51547	1-100-213-13	.SPACER,RING 0.056 TO 0.0585 IN.THK.....................F76,F77	EA	1
5	5	PADZZ	5365-00-833-1227	51547	1-100-213-14	.SPACER,RING 0.059 TO 0.615 IN.THK......................F76,F77	EA	1
5	5	PADZZ	5365-00-833-1229	51547	1-100-213-15	.SPACER,RING 0.062 TO 0.0645 IN.THK.....................F76,F77	EA	1
5	5	PADZZ	5365-00-856-1115	51547	1-100-213-16	.SPACER,RING 0.020 TO 0.0225 IN.THK.....................F76,F77	EA	1
5	5	PADZZ	5365-00-965-2827	51547	1-100-213-17	.SPACER,RING 0.017 TO 0.0195 IN.THK.....................F76,F77	EA	1
5	5	PADZZ	5365-00-965-2828	51547	1-100-213-18	.SPACER,RING 0.014 TO 0.0165 IN.THK.....................F76,F77	EA	1
5	5	PADZZ	5365-00-965-2829	51547	1-100-213-19	.SHIM 0.011 TO 0.0135 IN.THK............................F76,F77	EA	1
5	5	PADZZ	5365-00-987-5525	51547	1-100-213-20	.SPACER,RING 0.065 TO 0.0675 IN.THK.....................F76,F77	EA	1
5	5	PADZZ	5365-00-987-5526	51547	1-100-213-21	.SPACER,RING-0 068 T 0.068 TO 0.0705 IN.THK.............F76,F77	EA	1
5	6	PADZZ	5330-00-165-1936	81349	M83248-1-159	.PACKING,PREFORMED..F77	EA	1
5	7	PADZZ	5365-00-016-2854	51547	1-060-124-01	.SPACER,PLATE 0.020 TO 0.022 IN.THK.....................F76,F77	EA	1
5	7	PADZZ	5365-00-016-2915	51547	1-060-124-02	.SPACER,COMPRESSOR,F 0.028 TO 0.030 IN.THK..............F76,F77	EA	1
5	7	PADZZ	5365-00-016-2916	51547	1-060-124-03	.SPACER,COMPRESSOR,F 0.036 TO 0.038 IN.THK..............F76,F77	EA	1
5	7	PADZZ	5365-00-016-2917	51547	1-060-124-04	.SPACER,COMPRESSOR,F 0.044 TO 0.046 IN.THK..............F76,F77	EA	1
5	7	PADZZ	5365-00-016-2918	51547	1-060-124-05	.SPACER,PLATE 0.052 TO 0.054 IN.THK.....................F76,F77	EA	1
5	7	PADZZ	5365-00-016-2919	51547	1-060-124-06	.SPACER,PLATE 0.060 TO 0.062 IN.THK.....................F76,F77	EA	1
5	7	PADZZ	5365-00-016-2921	51547	1-060-124-07	.SPACER,COMPRESSOR,F 0.068 TO 0.070 IN.THK..............F76,F77	EA	1
5	7	PADZZ	5365-00-016-2923	51547	1-060-124-08	.SPACER,COMPRESSOR,F 0.076 TO 0.078 IN.THK..............F76,F77	EA	1
5	7	PADZZ	5365-00-016-2933	51547	1-060-124-09	.SPACER,PLATE 0.084 TO 0.086 IN.THK.....................F76,F77	EA	1
5	7	PADZZ	5365-00-016-2934	51547	1-060-124-10	.SPACER,COMPRESSOR,F 0.092 TO 0.094 IN.THK..............F76,F77	EA	1
5	8	PADZZ	2840-00-015-6536	51547	1-060-122-01	.SLEEVE,COMPRESSOR R....................................F76,F77	EA	1
5	9	PADZZ	2840-00-961-1354	51547	1-060-190-01	.HOUSING,ANTIFRICTIO....................................F76,F77	EA	1
5	10	PADDD	3110-00-727-3032	51547	1-300-015	.BEARING,BALL,ANNULA....................................F76,F77	EA	1

(1) ILLUSTRATION		(2)	(3)	(4)	(5)	(6) DESCRIPTION	(7)	(8)
(a) FIG NO	(b) ITEM NO	SMR CODE	NATIONAL STOCK NUMBER	FSCM	PART NUMBER	USABLE ON CODE	U/M	QTY INC IN UNIT
5	11	PADZZ	2840-00-015-6535	51547	1-060-125-01	.CUP,LOCKING,COMPRES....E76,E77	EA	1
5	12	PADZZ	5365-00-017-2615	51547	1-060-126-01	.RING,EXTERNALLY THR....E76,E77	EA	1
5	13	PADZZ	2840-00-961-1388	51547	1-100-413-08	.IMPELLER,FRONT,COMP....E76,E77	EA	1
5	14	PADZZ	2840-00-015-6534	51547	1-060-127-03	.HOUSING,BEARING SEA....E76,E77	EA	1
5	15	PADZZ	5330-00-963-1139	51547	1-300-214	.SEAL,PLAIN ENCASED....E76,E77	EA	1
5	16	PADZZ	5330-00-958-2430	51547	STD3019E54	.PACKING,PREFORMED....E76,E77	EA	1
5	17	PADZZ	5365-00-445-3509	51547	1-300-047-01	.RING,RETAINING....E76,E77	EA	1
5	18	PADZZ	5305-00-862-5326	51547	1-100-214-06	.SCREW,CAP,SOCKET HE....E76,E77	EA	19
5	19	PADZZ	2840-00-765-5501	51547	1-080-028-02	.RETAINER,BOLT....E76,E77	EA	19
5	20	AODDD		51547	1-100-120-03	.DISK ASSEMBLY,FIRST....E76,E77	EA	1
5	21	PADZZ	2840-00-808-6431	51547	1-100-381-01	..BLADE,COMPRESSOR RO....E76,E77	EA	26
5	22	PADZZ	2840-00-082-0468	51547	1-100-381-02	..BLADE SET,COMPRESSO....E76,E77	SE	1
5	23	PADZZ	2840-00-652-6565	51547	1-100-237-01	..PLATE,LOCKING,COMPR 0.0176 TO 0.0185 IN.THK....E76,E77	EA	1
5	23	PADZZ	2840-00-652-6583	51547	1-100-237-02	..PLATE,LOCKING,COMPR 0.0186 TO 0.0195 IN.THK....E76,E77	EA	1
5	23	PADZZ	2840-00-654-1530	51547	1-100-237-03	..PLATE,LOCKING,COMPR 0.0196 TO 0.0205 IN.THK....E76,E77	EA	1
5	23	PADZZ	2840-00-654-1533	51547	1-100-237-04	..PLATE,LOCKING,COMPR 0.0206 TO 0.0215 IN.THK....E76,E77	EA	1
5	23	PADZZ	2840-00-654-1534	51547	1-100-237-05	..PLATE,LOCKING,COMPR 0.0216 TO 0.0225 IN.THK....E76,E77	EA	1
5	23	PADZZ	2840-00-653-0073	51547	1-100-237-06	..PLATE,LOCKING,COMPR 0.0226 TO 0.0235 IN.THK....E76,E77	EA	1
5	23	PADZZ	2840-00-653-0080	51547	1-100-237-07	..PLATE,LOCKING,COMPR 0.0236 TO 0.0245 IN.THK....E76,E77	EA	1
5	23	PADZZ	2840-00-653-0094	51547	1-100-237-08	..PLATE,LOCKING,COMPR 0.0246 TO 0.0255 IN.THK....E76,E77	EA	1
5	23	PADZZ	2840-00-653-0103	51547	1-100-237-09	..PLATE,LOCKING,COMPR 0.0256 TO 0.0265 IN.THK....E76,E77	EA	1
5	23	PADZZ	2840-00-652-6570	51547	1-100-237-10	..PLATE,LOCKING,COMPR 0.0266 TO 0.0275 IN.THK....E76,E77	EA	1
5	23	PADZZ	5340-00-488-1449	51547	1-100-237-11	..PLATE,LOCKING 0.0276 TO 0.0285 IN.THK....E76,E77	EA	1
5	23	PADZZ	5340-00-488-1388	51547	1-100-237-12	..PLATE,LOCKING 0.0286 TO 0.0295 IN.THK....E76,E77	EA	1
5	23	PADZZ	5340-00-488-1480	51547	1-100-237-13	..PLATE,LOCKING 0.0296 TO 0.0300 IN.THK....E76,E77	EA	1
5	24	PAFZZ	5315-01-038-1446	51547	1-300-268-02	..PIN,SPRING....E76,E77	EA	144
5	25	PADZZ	2840-00-860-7452	51547	1-100-275-02	..SHAFT,TURBINE,TURBI....E76,E77	EA	1
5	26	PADZZ	2840-00-659-7556	51547	1-100-201-01	.SPACER,COMPRESSOR R....E76,E77	EA	1
5	27	AODDD		51547	1-100-220-03	.COMPRESSOR ROTOR,SE....E76,E77	EA	1
5	28	PADZZ	2840-00-808-6014	51547	1-100-382-01	..BLADE,COMPRESSOR RO....E76,E77	EA	28
5	29	PADZZ	2840-00-082-0453	51547	1-100-382-02	..BLADE SET,COMPRESSO FIELD REPLACEMENT FOR PN 1-100-382-01 C/O 2 EA. BLADES....E76,E77	SE	1
5	30	PADZZ	2840-00-188-5850	51547	1-100-239-04	..DISK,AXIAL COMPRESS....E76,E77	EA	1
5	31	PADZZ	2840-00-671-0159	51547	1-100-202-03	.SPACER,COMPRESSOR R....E76,E77	EA	1
5	32	AODDD		51547	1-100-230-07	.COMPRESSOR ROTOR,AX....E76,E77	EA	1
5	33	PADZZ	2840-00-524-8577	51547	1-100-383-01	..BLADE,COMPRESSOR RO....E76,E77	EA	36
5	34	PADZZ	2840-00-835-6778	51547	1-100-383-02	..BLADE SET,COMPRESSO FIELD REPLACEMENT FOR PN 1-100-383-01 C/O EA.2 BLADES....E76,E77	SE	1
5	35	PADZZ	2840-00-157-2375	51547	1-100-242-09	..DISK,AXIAL COMPRESS....E76,E77	EA	1
5	36	PADZZ	2840-00-671-0180	51547	1-100-203-03	.SPACER,COMPRESSOR R....E76,E77	EA	1
5	37	AODDD		51547	1-100-240-15	.DISK ASSEMBLY,COMP....E76	EA	1

(1) ILLUSTRATION		(2)	(3)	(4)	(5)	(6) DESCRIPTION	(7)	(8)
(a) FIG NO.	(b) ITEM NO	SMR CODE	NATIONAL STOCK NUMBER	FSCM	PART NUMBER	USABLE ON CODE	U/M	QTY INC IN UNIT
5	38	PAOZZ	2840-00-524-8650	51547	1-130-384-01	..BLADE,COMPRESSOR RO F76,F77	EA	36
5	39	PAOZZ	2840-00-835-6781	51547	1-130-384-02	..BLADE SET,COMPRESSO FIELD REPLACEMENT FOR PN 1-100-384-01 C/O 2 EA. BLADES..........F76,F77	SE	1
5	40	PAOZZ	2840-00-157-2334	51547	1-130-244-38	..DISK,AXIAL COMPRESS..........F76,F77	EA	1
5	41	PAOZZ	2840-00-671-0181	51547	1-100-204-03	.SPACER,COMPRESSOR R..........F76,F77	EA	1
5	42	AOOOO		51547	1-130-450-09	.DISC ASSEMBLY,COMPR..........F76,F77	EA	1
5	43	PAOZZ	2840-00-524-8545	51547	1-130-385-01	..BLADE,COMPRESSOR RO..........F76,F77	EA	38
5	44	PAOZZ	2840-00-835-6780	51547	1-130-385-02	..BLADE SET,COMPRESSO FIELD REPLACEMENT FOR PN 1-100-385-01 C/O 2 EA. BLADES..........F76,F77	SE	1
5	45	PAOZZ	2840-00-535-8432	51547	1-100-417-05	..DISK AND HUB,AXIAL..........F76,F77	EA	1
5	46	PAOZZ	2840-00-475-8547	51547	1-130-416-07	.SPACER,COMPRESSOR R..........F76,F77	EA	1
5	47	PAOZZ	2840-00-535-8418	51547	1-100-440-07	.COMPRESSOR ROTOR,CE..........F76,F77	EA	1
5	48	XAOZZ		51547	1-130-414-04	..IMPELLER,FORWARD..........F76,F77	EA	1
5	49	XAOZZ		51547	1-130-251-01	..COUPLING,COMPRESSOR..........F76,F77	EA	1
5	50	XAOZZ		51547	1-100-415-01	..IMPELLER,REAR..........F76,F77	EA	1
5	51	PAOZZ	2840-00-864-3460	51547	1-100-207-04	.SLEEVE,COMPRESSOR RO..........F76,F77	EA	1
5	52	PAOZZ	2840-00-475-8550	51547	1-130-344-01	.PLUG,POWERSHAFT,ROT..........F76,F77	EA	1
5	53	PAOZZ	2840-00-581-6557	51547	1-100-620-01	.SHAFT,TURBINE,TURBI..........F76,F77	EA	1
5	54	PAOZZ	2840-00-766-8842	51547	1-100-405-03	.SHAFT,TURBINE,TURBI..........F76,F77	EA	1
5	55	PAOZZ	2840-00-475-0088	51547	1-100-406-03	.IMPELLER,OIL,FORWAR..........F76,F77	EA	1
5	56	PAFZZ	3110-00-071-4568	51547	1-300-176	.BEARING,ROLLER,CYLI..........F76,F77	EA	1
5	57	PAOZZ	2840-00-475-0089	51547	1-130-407-03	.IMPELLER,OIL,REAR,R..........F76,F77	EA	1
5	58	PAOZZ	2840-00-554-4301	51547	1-100-408-05	.LINER,REAR BEARING..........F76,F77	EA	1
5	59	PAOZZ	2840-00-766-8843	51547	1-100-409-02	.CONE,FORWARD,COMPRE..........F76,F77	EA	1
5	60	PAOOO	2840-00-054-3808	51547	1-100-490-08	.TURBINE ROTOR,TURBI..........F76,F77	EA	1
5	61	PAOZZ	2840-00-522-2369	51547	1-130-427-01	..DISK,AXIAL COMPRESS..........F76,F77	EA	1
5	62	PAOZZ	2840-00-054-8312	51547	1-100-428-18	..BLADE,TURBINE ROTOR BLADE PN 1-100-428-18 AND -22 ARE INTERCHANGABLE..........F76,F77	EA	AR
5	63	PAFZZ	2840-00-863-5735	51547	1-130-429-03	..WEDGE,BLADE,DISC,FI..........F76,F77	EA	44
5	64	PAOZZ	5315-00-150-3435	51547	1-140-285-01	..PIN,STRAIGHT,HEADLE..........F76,F77	EA	44
5	65	PAOZZ	5310-00-750-8116	51547	1-130-034-01	.NUT,PLAIN,ROUND..........F76,F77	EA	1
5	66	PAOZZ	2840-00-766-8845	51547	1-100-423-01	.LOCKRING,COMPRSSOR..........F76,F77	EA	1
5	67	PAOZZ	5365-00-003-1165	51547	1-130-411-04	.RING,EXTERNALLY THR..........F76,F77	EA	1

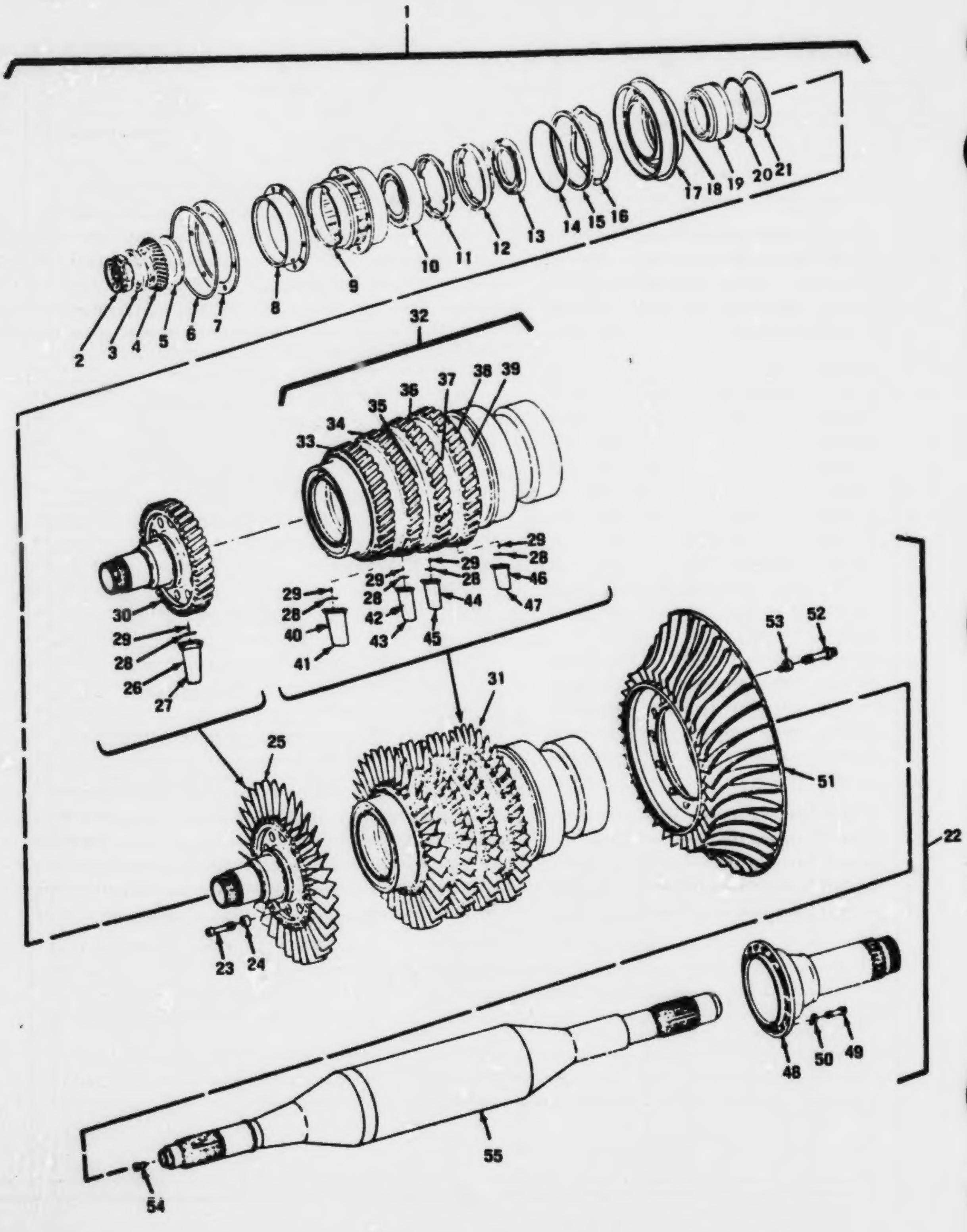

Figure 6. Compressor Rotor Assembly

(1) ILLUSTRATION (a) FIG NO	(b) ITEM NO	(2) SMR CODE	(3) NATIONAL STOCK NUMBER	(4) FSCM	(5) PART NUMBER	(6) DESCRIPTION USABLE ON CODE	(7) U/M	(8) QTY INC IN UNIT
						GROUP 0402 COMPRESSOR ROTOR ASSEMBLY		
						(T53-L-13B)		
6	1	XDDDD	2840-01-005-4859	51547	1-100-720-40	COMPRESSOR ROTOR,AX SEE FIG.4 FOR NHA..................EZL	EA	1
6	1	ADDDD		51547	1-100-720-45	ROTOR ASSEMBLY COMP SEE FIG.4 FOR NHA USE AFT CMPL WITH MWO55-2840-229-50/2....................................EZL	EA	1
6	2	PADZZ	2840-00-544-2567	51547	1-300-077	.SEAL AND NUT,POWER.................................EZL	EA	1
6	3	PADZZ	2840-00-856-6276	51547	1-100-276-01	.RING,LOCK,COMPRESSO................................EZL	EA	1
6	4	PADZZ	3020-00-671-0164	51547	1-100-212-01	.GEAR,BEVEL...EZL	EA	1
6	5	PADZZ	5365-00-834-6403	51547	1-100-213-02	.SPACER,RING 0.023 TO 0.0255 IN. THK..................EZL	EA	1
6	5	PADZZ	5365-00-833-1224	51547	1-100-213-03	.SPACER,RING 0.026 TO 0.0285 IN. THK..................EZL	EA	1
6	5	PADZZ	5365-00-834-6402	51547	1-100-213-04	.SPACER,RING 0.029 TO 0.0315 IN. THK..................EZL	EA	1
6	5	PADZZ	5365-00-833-1225	51547	1-100-213-05	.SPACER,RING 0.032 TO 0.0345 IN. THK..................EZL	EA	1
6	5	PADZZ	5365-00-833-1222	51547	1-100-213-06	.SPACER,RING 0.035 TO 0.0375 IN. THK..................EZL	EA	1
6	5	PADZZ	5365-00-833-1221	51547	1-100-213-07	.SPACER,RING 0.038 TO 0.0405 IN. THK..................EZL	EA	1
6	5	PADZZ	5365-00-833-1220	51547	1-100-213-08	.SPACER,RING 0.041 TO 0.0435 IN. THK..................EZL	EA	1
6	5	PADZZ	5365-00-834-6404	51547	1-100-213-09	.SPACER,RING 0.044 TO 0.0465 IN. THK..................EZL	EA	1
6	5	PADZZ	5365-00-833-3537	51547	1-100-213-10	.SPACER,RING 0.047 TO 0.0495 IN. THK..................EZL	EA	1
6	5	PADZZ	5365-00-833-1226	51547	1-100-213-11	.SPACER,RING 0.050 TO 0.0525 IN.THK...................EZL	EA	1
6	5	PADZZ	5365-00-833-1230	51547	1-100-213-12	.SPACER,RING 0.053 TO 0.0555 IN.THK...................EZL	EA	1
6	5	PADZZ	5365-00-475-0067	51547	1-100-213-13	.SPACER,RING 0.056 TO 0.0585 IN.THK...................EZL	EA	1
6	5	PADZZ	5365-00-833-1227	51547	1-100-213-14	.SPACER,RING 0.059 TO 0.0615 IN.THK...................EZL	EA	1
6	5	PADZZ	5365-00-833-1229	51547	1-100-213-15	.SPACER,RING 0.062 TO 0.0645 IN.THK...................EZL	EA	1
6	5	PADZZ	5365-00-856-1115	51547	1-100-213-16	.SPACER,RING 0.020 TO 0.0225 IN.THK...................EZL	EA	1
6	5	PADZZ	5365-00-585-2827	51547	1-100-213-17	.SPACER,RING 0.017 TO 0.0195 IN.THK...................EZL	EA	1
6	5	PADZZ	5365-00-585-2828	51547	1-100-213-18	.SPACER,RING 0.014 TO 0.0165 IN.THK...................EZL	EA	1
6	5	PADZZ	5365-00-585-2829	51547	1-100-213-19	.SHIM 0.011 TO 0.0135 IN.THK..........................EZL	EA	1
6	5	PADZZ	5365-00-587-5525	51547	1-100-213-20	.SPACER,RING 0.065 TO 0.0675 IN.THK...................EZL	EA	1
6	5	PADZZ	5365-00-587-5526	51547	1-100-213-21	.SPACER,RING 0.068 TO 0.0705 IN.THK...................EZL	EA	1
6	6	PADZZ	5330-00-165-1536	81349	M83248-1-159	.PACKING,PREFORMED....................................EZL	EA	1
6	7	PADZZ	5365-00-016-2854	51547	1-060-124-01	.SPACER,PLATE 0.020 TO 0.022 IN.THK...................EZL	EA	1
6	7	PADZZ	5365-00-016-2515	51547	1-060-124-02	.SPACER,COMPRESSOR,F 0.028 TO 0.030 IN.THK...........EZL	EA	1
6	7	PADZZ	5365-00-016-2516	51547	1-060-124-03	.SPACER,COMPRESSOR,F 0.036 TO 0.038 IN.THK...........EZL	EA	1
6	7	PADZZ	5365-00-016-2517	51547	1-060-124-04	.SPACER,COMPRESSOR,F 0.044 TO 0.046 IN.THK...........EZL	EA	1
6	7	PADZZ	5365-00-016-2518	51547	1-060-124-05	.SPACER,PLATE 0.052 TO 0.054 IN.THK...................EZL	EA	1
6	7	PADZZ	5365-00-016-2519	51547	1-060-124-06	.SPACER,PLATE 0.060 TO 0.062 IN.THK...................EZL	EA	1
6	7	PADZZ	5365-00-016-2521	51547	1-060-124-07	.SPACER,COMPRESSOR,F 0.068 TO 0.070 IN.THK...........EZL	EA	1
6	7	PADZZ	5365-00-016-2523	51547	1-060-124-08	.SPACER,COMPRESSOR,F 0.076 TO 0.078 IN.THK...........EZL	EA	1
6	7	PADZZ	5365-00-016-2533	51547	1-060-124-09	.SPACER,PLATE 0.084 TO 0.086 IN.THK...................EZL	EA	1
6	7	PADZZ	5365-00-016-2534	51547	1-060-124-10	.SPACER,COMPRESSOR,F 0.092 TO 0.094 IN.THK...........EZL	EA	1
6	8	PADZZ	2840-00-015-6536	51547	1-060-122-01	.SLEEVE,COMPRESSOR R..................................EZL	EA	1

(1) ILLUSTRATION (a) FIG NO	(b) ITEM NO	(2) SMR CODE	(3) NATIONAL STOCK NUMBER	(4) FSCM	(5) PART NUMBER	(6) DESCRIPTION USABLE ON CODE	(7) U/M	(8) QTY INC IN UNIT
6	9	PADZZ	2840-00-561-1354	51547	1-060-190-01	.HOUSING,ANTIFRICTIO....................................F7L	EA	1
6	10	PADDD	3110-00-727-3032	51547	1-300-015	.BEARING,BALL,ANNULA....................................F7L	EA	1
6	11	PADZZ	2840-00-015-6535	51547	1-060-125-01	.CUP,LOCKING,COMPRES....................................F7L	EA	1
6	12	PADZZ	5365-00-017-2875	51547	1-060-126-01	.RING,EXTERNALLY THR....................................F7L	EA	1
6	13	PADZZ	2840-00-524-8008	51547	1-130-413-12	.IMPELLER,BEARING,CO....................................F7L	EA	1
6	13	PAFZZ	2840-01-008-1373	51547	1-300-588-01	.PLATE,FACE,BEARING USE AFT CMPL WITH MWO55-2840-229-50/2... F7L	EA	1
6	14	PADZZ	5330-00-878-6201	51547	S103C19872	.PACKING,PREFORMED....................................F7L	EA	1
6	15	PADZZ	5365-00-550-2505	51547	1-060-141-01	.SPACER,RING 0.020 TO 0.022 IN.THK....................F7L	EA	1
6	15	PADZZ	5365-00-550-2528	51547	1-060-141-02	.SPACER,RING 0.028 TO 0.030 IN.THK....................F7L	EA	1
6	15	PADZZ	5365-00-550-2588	51547	1-060-141-03	.SPACER,RING 0.036 TO 0.038 IN.THK....................F7L	EA	1
6	15	PADZZ	5365-00-550-2551	51547	1-060-141-04	.SPACER,RING 0.044 TO 0.046 IN.THK....................F7L	EA	1
6	15	PADZZ	5365-00-550-2552	51547	1-060-141-05	.SPACER,RING 0.052 TO 0.054 IN.THK....................F7L	EA	1
6	15	PADZZ	5365-00-550-2553	51547	1-060-141-06	.SPACER,RING 0.052 TO 0.054 IN.THK....................F7L	EA	1
6	15	PADZZ	5365-00-550-3002	51547	1-060-141-07	.SPACER,RING 0.068 TO 0.070 IN.THK....................F7L	EA	1
6	15	PADZZ	5365-00-550-3008	51547	1-060-141-08	.SPACER,RING 0.076 TO 0.078 IN.THK....................F7L	EA	1
6	15	PADZZ	5365-00-550-3051	51547	1-060-141-09	.SPACER,RING 0.084 TO 0.086 IN.THK....................F7L	EA	1
6	15	PADZZ	5365-00-950-3232	51547	1-060-141-10	.SPACER,RING 0.092 TO 0.094 IN.THK....................F7L	EA	1
6	16	PADZZ	5310-00-552-7352	51547	1-060-139-01	.WASHER,SPRING TENSI....................................F7L	EA	1
6	17	PADZZ	2840-00-545-5402	51547	1-060-127-04	.HOUSING,BEARING SEA....................................F7L	EA	1
6	18	PAFZZ	5365-01-006-1148	51547	1-060-162-01	.SPACER,RING 0.019 TO 0.021 IN.THK USE AFT CMPL WITH MWO55-2840-229-50/2 ....F7L	EA	V
6	18	PAFZZ	5365-01-006-1149	51547	1-060-162-02	.SPACER,RING 0.022 TO 0.024 IN.THK USE AFT CMPL WITH MWO55-2840-229-50/2 ....F7L	EA	V
6	18	PAFZZ	5365-01-007-1066	51547	1-060-162-03	.SPACER,RING 0.025 TO 0.027 IN.THK USE AFT CMPL WITH MWO55-2840-229-50/2 ....F7L	EA	V
6	18	PAFZZ	5365-01-006-1150	51547	1-060-162-04	.SPACER,RING 0.028 TO 0.030 IN.THK USE AFT CMPL WITH MWO55-2840-229-50/2 ....F7L	EA	V
6	18	PAFZZ	5365-01-044-8051	51547	1-060-162-05	.SPACER,RING 0.031 TO 0.033 IN.THK....................F7L	EA	1
6	18	PAFZZ	5365-01-044-8052	51547	1-060-162-06	.SPACER,RING 0.034 TO 0.036 IN.THK....................F7L	EA	1
6	19	PAFZZ	5330-00-563-1139	51547	1-300-214	.SEAL,PLAIN ENCASED....................................F7L	EA	1
6	19	PAFZZ	5330-01-008-6243	51547	1-300-585-01	.SEAL,PLAIN ENCASED USE AFT CMPL WITH MWO55-2840-229-50/2... F7L	EA	1
6	20	PAFZZ	5330-00-558-2430	51547	S103C19E54	.PACKING,PREFORMED....................................F7L	EA	1
6	21	PAFZZ	5365-00-445-3509	51547	1-300-347-01	.RING,RETAINING....................................F7L	EA	1
6	22	AODDD		51547	1-101-260-02	.ROTOR ASSEMBLY....................................F7L	EA	1
6	22	AODDD		51547	1-101-260-08	.ROTOR SUB ASSEMBLY USE AFT CMPL WITH MWO55-2840-229-50/2... F7L	EA	1
6	23	PADZZ	5306-00-177-5723	51547	1-100-506-02	..BOLT,INTERNAL WRENC....................................F7L	EA	10
6	24	PADZZ	2840-00-765-5501	51547	1-080-328-02	..RETAINER,BOLT....................................F7L	EA	10
6	25	AODDD		51547	1-101-080-01	..SHAFT ASSEMBLY,FRON....................................F7L	EA	1
6	25	AODDD		51547	1-101-080-04	..SHAFT ASSEMBLY USE AFT CMP WITH MWO55-2840-229-50/2....F7L	EA	1
6	26	PADZZ	2840-00-176-3760	51547	1-100-361-06	...BLADE,COMPRESSOR RO....................................F7L	EA	31

(1) ILLUSTRATION (a) FIG NO	(b) ITEM NO	(2) SMR CODE	(3) NATIONAL STOCK NUMBER	(4) FSCM	(5) PART NUMBER	(6) DESCRIPTION USABLE ON CODE	(7) U/M	(8) QTY INC IN UNIT
6	27	PADZZ	2840-00-176-3768	51547	1-100-361-05	...BLADE SET,COMPRESSO ROTOR........................FZL	EA	1
6	28	PADZZ	5340-00-181-1225	51547	1-100-505-02	...LOCKING PLATE COMPR..................................FZL	EA	[illegible]
6	29	PAFZZ	5315-01-038-1446	51547	1-300-268-02	...PIN,SPRING..FZL	EA	[illegible]
6	30	PADZZ	2840-00-176-3750	51547	1-100-495-03	...DISK AND HUB,AXIAL....................................FZL	EA	1
6	30	PADZZ	2840-01-006-1118	51547	1-100-495-07	...SHAFT FRONT REWORK FROM 1-100-495-03 USE AFT CNBL WITH MWC55-2840-229-50/2..................................FZL	EA	1
6	31	AODOO		51547	1-101-090-01	..ROTOR ASSEMBLY..FZL	EA	1
6	32	PBOZZ	2840-00-176-3746	51547	1-101-250-03	...DISK AND HUB,AXIAL....................................FZL	EA	1
6	33	PADZZ	2840-00-452-4443	51547	1-100-496-03	...DISK,AXIAL COMPRESS 2ND STAGE....................FZL	EA	1
6	34	PADZZ	2840-00-452-4447	51547	1-100-497-01	....DISK,AXIAL COMPRESS 3RD STAGE...................FZL	EA	1
6	35	PADZZ	2840-00-231-0447	51547	1-100-375-01	....RING,THIRD STAGE......................................FZL	EA	1
6	36	PADZZ	2840-00-452-4442	51547	1-100-498-01	....DISK,AXIAL COMPRESS 4TH STAGE...................FZL	EA	1
6	37	PADZZ	2840-00-452-4450	51547	1-100-534-01	....RING,FOURTH STAGE....................................FZL	EA	1
6	38	PADZZ	2840-00-452-4448	51547	1-100-499-03	....DISK,AXIAL COMPRESS 5TH STAGE...................FZL	EA	1
6	39	PADZZ	2840-00-452-4453	51547	1-100-535-01	....RING,FIFTH STAGE......................................FZL	EA	1
6	40	PADZZ	2840-00-176-3782	51547	1-100-286-09	...BLADE,COMPRESSOR RO 2ND STAGE...................FZL	EA	36
6	41	PADZZ	2840-00-176-3765	51547	1-100-286-08	...BLADE SET,COMPRESSO 2ND STAGE...................FZL	EA	1
6	42	PADZZ	2840-00-176-3756	51547	1-100-383-05	...BLADE,COMPRESSOR RO 3RD STAGE...................FZL	EA	34
6	43	PADZZ	2840-00-176-3773	51547	1-100-383-04	...BLADE SET,COMPRESSO 3RD STAGE...................FZL	EA	1
6	44	PADZZ	2840-00-176-3751	51547	1-100-384-05	...BLADE,COMPRESSOR RO 4TH STAGE...................FZL	EA	36
6	45	PADZZ	2840-00-176-3758	51547	1-100-384-04	...BLADE SET,COMPRESSO 4TH STAGE...................FZL	EA	1
6	46	PADZZ	2840-00-176-3752	51547	1-100-385-05	...BLADE,COMPRESSOR RO 5TH STAGE...................FZL	EA	38
6	47	PADZZ	2840-00-176-3765	51547	1-100-385-04	...BLADE SET,COMPRESSO 5TH STAGE...................FZL	EA	1
6	48	PADZZ	2840-00-176-3751	51547	1-100-501-01	..SHAFT,TURBINE,TURBI....................................FZL	EA	1
6	49	PADZZ	5306-00-177-5712	51547	1-100-502-02	..BOLT,EXTERNALLY...FZL	EA	16
6	50	PADZZ	5310-00-176-8175	51547	1-100-148-01	..WASHER,KEY..FZL	EA	16
6	51	PADZZ	2840-00-176-3745	51547	1-100-078-07	.COMPRESSOR ROTOR,CE.....................................FZL	EA	1
6	52	PADZZ	5306-00-177-5712	51547	1-100-502-02	.BOLT,EXTERNALLY...FZL	EA	12
6	53	PADZZ	5310-00-176-8175	51547	1-100-148-01	.WASHER,KEY..FZL	EA	12
6	54	PADZZ	2840-00-475-8550	51547	1-100-344-01	.PLUG,POWERSHAFT,ROT....................................FZL	EA	[illegible]
6	55	PADOO	2840-00-543-2206	51547	1-100-800-04	.SHAFT,TURBINE,TURBI.....................................FZL	EA	1

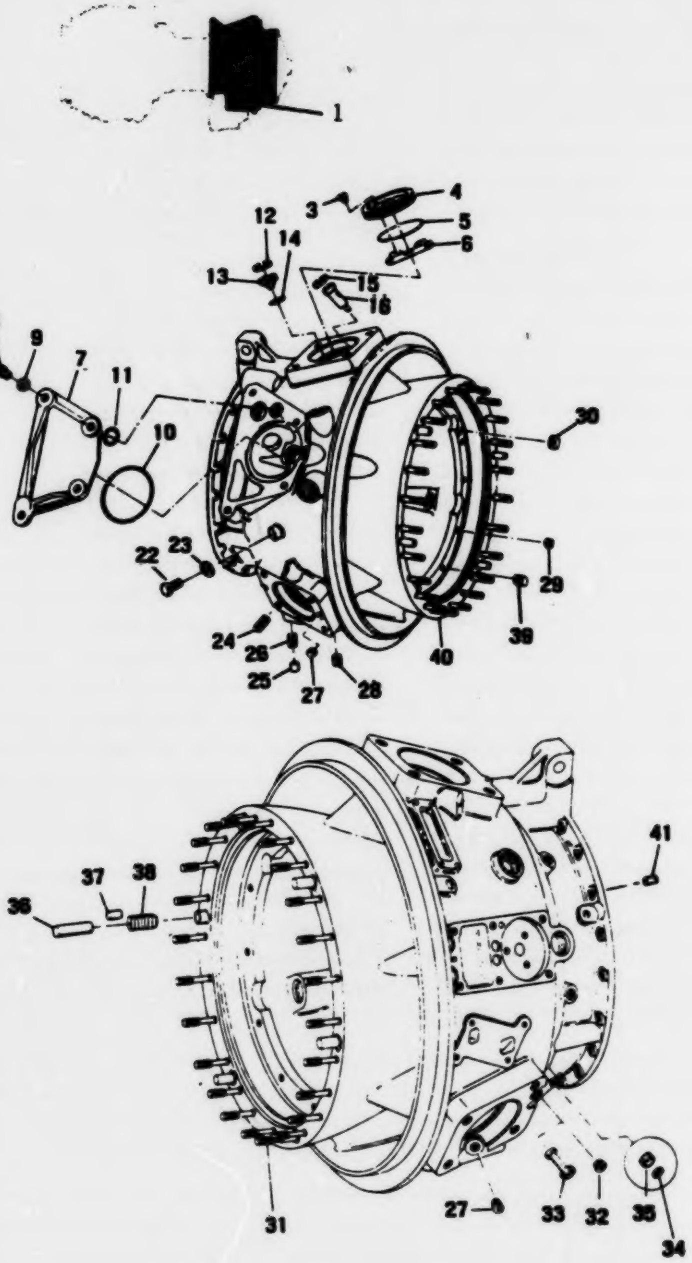

Figure 7. Inlet Housing Assembly

(1) ILLUSTRATION		(2)	(3)	(4)	(5)	(6)	(7)	(8)
(a) FIG NO.	(b) ITEM NO	SMR CODE	NATIONAL STOCK NUMBER	FSCM	PART NUMBER	DESCRIPTION USABLE ON CODE	U/M	QTY INC IN UNIT
						GROUP 0402 INLET HOUSING ASSEMBLY		
7	1	PADDD	2840-00-785-7805	51547	1-060-100-07	HOUSING,REDUCTION G SEE FIG.29 FOR NHA E76,E77	EA	1
7	1	PADDD	2840-00-925-4156	51547	1-060-220-03	HOUSING,REDUCTION G SEE FIG.29 FOR NHA E71	EA	1
7	3	PADZZ	5306-00-738-1041	51547	1-060-118-01	.BOLT,MACHINE	EA	6
7	4	PADZZ	2840-00-855-5465	51547	1-060-109-03	.PLUG,ENGINE MOUNTIN	EA	3
7	5	PCDZZ	5330-00-815-3508	96906	MS29561-235	.PACKING,PREFORME	EA	3
7	6	PADZZ	2840-00-735-6543	51547	1-060-119-01	.LOCK,MOUNTING PAD E76,E77	EA	3
7	6	PADZZ	2840-00-878-6172	51547	1-060-119-02	.PLATE,MOUNTING PAD E71	EA	3
7	7	PADZZ	2840-00-787-2597	51547	1-060-112-03	.COVER,STARTER AND P	EA	1
7	8	PADZZ	5306-00-615-1807	88044	AN134011	.BOLT,MACHINE	EA	4
7	9	PADZZ	5310-00-167-0837	88044	AN960-616L	.WASHER,FLAT	EA	4
7	10	PCDZZ	5330-00-726-4153	96906	MS29561-237	.PACKING,PREFORMED	EA	1
7	11	PCFZZ	5330-00-715-1364	96906	MS9241-017	.PACKING,PREFORMED	EA	1
7	12	PADZZ	5365-00-721-4828	96906	MS16625-1102	.RING,RETAINING	EA	10
7	13	PADZZ	2840-00-787-2558	51547	1-060-106-03	.PLUG,CORE,INLET HOU	EA	1
7	13	PADZZ	2840-00-736-8853	51547	1-060-106-04	.PLUG,CORE,INLET HOU	EA	0
7	14	PCDZZ		96906	MS29561-320	.PACKING,PREFORME	EA	1
7	15	PADZZ		96906	MS16625-3068	.RING,RETAINING	EA	6
7	16	PADZZ	2840-00-475-6568	51547	1-060-107-01	.TUBE,AIR TRANSFER,I	EA	6
7	22	PADZZ	5365-00-285-3015	96906	MS9015-04	.PLUG,MACHINE THREAD	EA	1
7	23	PCDZZ	5330-00-80[illegible]-2566	96906	MS28778-4	.PACKING,PREFORMED	EA	1
7	24	PAFZZ	5340-00-290-4513	96906	MS21208F8-20	.INSERT,SCREW THR	EA	12
7	25	PADZZ	5315-00-815-4150	51547	1-060-013-01	.PIN,HOLLOW	EA	2
7	26	PAFZZ	5340-00-290-4511	96906	MS21208F7-20	.INSERT,SCREW THREAD	EA	2
7	27	PAFZZ	4730-00-188-3493	88044	AN932D2	.PLUG,PIPE	EA	1
7	28	PAFZZ	5340-00-291-3452	96906	MS21208F6-15	.INSERT,SCREW THREAD	EA	10
7	29	PAFZZ	5340-00-290-4457	96906	MS124736	.INSERT,SCREW THREAD	EA	10
7	30	PAFZZ	5340-00-558-5834	96906	MS21208F8-10	.INSERT,SCREW THR	EA	1
7	31	PAFZZ	5307-00-903-4865	51547	STD3001B121N	.STUD,STEPPED	EA	1
7	31	PAFZZ	5307-00-903-4866	51547	STD3001B121F	.STUD,STEPPED	EA	1
7	32	PADZZ	4730-00-188-3510	88044	AN932D3	.PLUG,PIPE E76,E77	EA	1
7	33	PADZZ	2840-00-102-8542	51547	1-060-154-01	.PLUG,METERING E71	EA	1
7	34	PAFZZ	5365-00-633-1854	01556	KR5A15	.RING,LOCK,KEYED	EA	1
7	35	PAFZZ	5340-00-557-3302	96906	MS21208F1-15	.INSERT,SCREW THREAD	EA	8
7	36	PADZZ	5315-00-276-6366	88044	AN122684	.PIN,STRAIGHT,HEA	EA	3
7	37	XBDZZ	5315-00-475-1533	51547	1-060-037-01	.PIN,STRAIGHT,HEADL	EA	3
7	38	PADZZ	5340-00-604-1451	51547	1-060-115-01	.INSERT,SCREW THREAD	EA	3
7	39	PADZZ	5340-00-290-4660	96906	MS21209F5-10	.INSERT, SCREW TH E76,E77	EA	1
7	39	MDDZZ		51547	1-060-143-01	.INSERT,SCREW THREAD E71	EA	1
7	40	XADZZ		51547	1-060-101-10	.HOUSING,INLET E76,E77	EA	1

(1) ILLUSTRATION (a) FIG NO.	(b) ITEM NO.	(2) SMR CODE	(3) NATIONAL STOCK NUMBER	(4) FSCM	(5) PART NUMBER	(6) DESCRIPTION USABLE ON CODE	(7) U/M	(8) QTY INC IN UNIT
7	40	XADZZ		51547	1-C6C-102-03	.HOUSING,INLET....................................FZL	EA	1
7	41	PADZZ	5315-00-527-5754	51547	1-C6C-C98-02	.PIN,STRAIGHT,HEADED................................FZL	EA	1

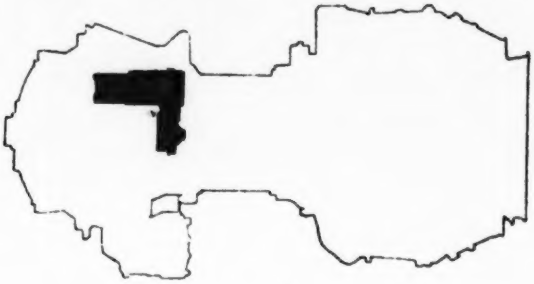

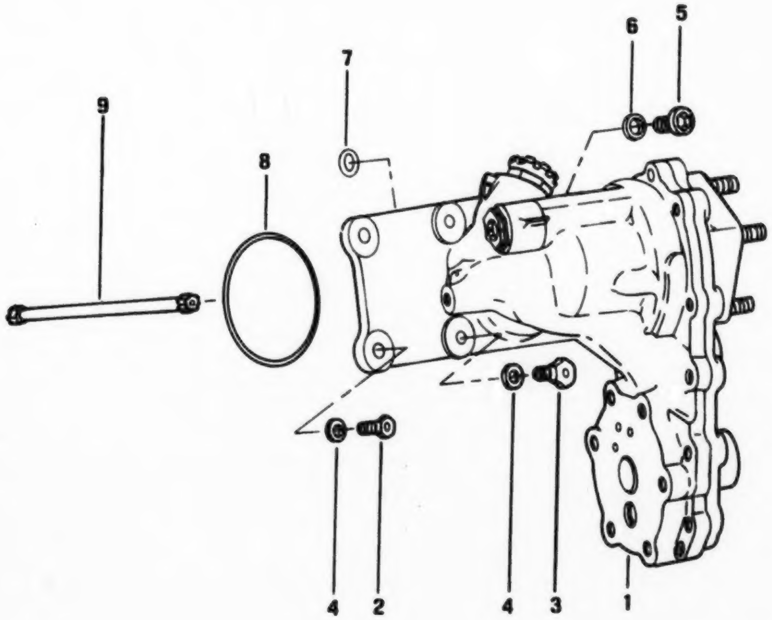

Figure 8. Overspeed Governor and Tachometer Drive Assembly

(1) ILLUSTRATION (a) FIG NO	(b) ITEM NO	(2) SMR CODE	(3) NATIONAL STOCK NUMBER	(4) FSCM	(5) PART NUMBER	(6) DESCRIPTION USABLE ON CODE	(7) U/M	(8) QTY INC IN UNIT
						GROUP 0402 OVERSPEED GOVERNOR AND		
						TACHOMETER DRIVE ASSEMBLY		
6	1	PAUDD	2840-00-853-3787	51547	1-160-500-04	DRIVE ASSEMBLY,OVER SEE FIG.5 FOR BREAKDOWN..................	EA	1
6	2	PAOZZ	5306-00-265-8588	88044	AN103813	BOLT,MACHINE..	EA	2
6	3	PAOZZ	5306-00-255-1058	96906	MS5530-18	BOLT,MACHINE..	EA	2
6	4	PAOZZ	5310-00-167-0835	88044	AN960-416L	WASHER,FLAT..	EA	4
6	5	PAOZZ	5306-00-551-0776	96906	MS5089-14	BOLT,MACHINE..	EA	2
6	6	PAOZZ	5310-00-853-8003	51547	1-160-566-01	WASHER,FLAT..	EA	2
6	7	PCOZZ	5330-00-068-4382	96906	MS5241-012	PACKING,PREFORMED....................................	EA	2
6	8	PCOZZ	5330-00-800-6889	96906	MS29561-144	PACKING,PREFORMED....................................	EA	1
6	9	PAOZZ	2840-00-522-2351	51547	1-160-411-01	SHAFT,OVERSPEED GOV..................................	EA	1

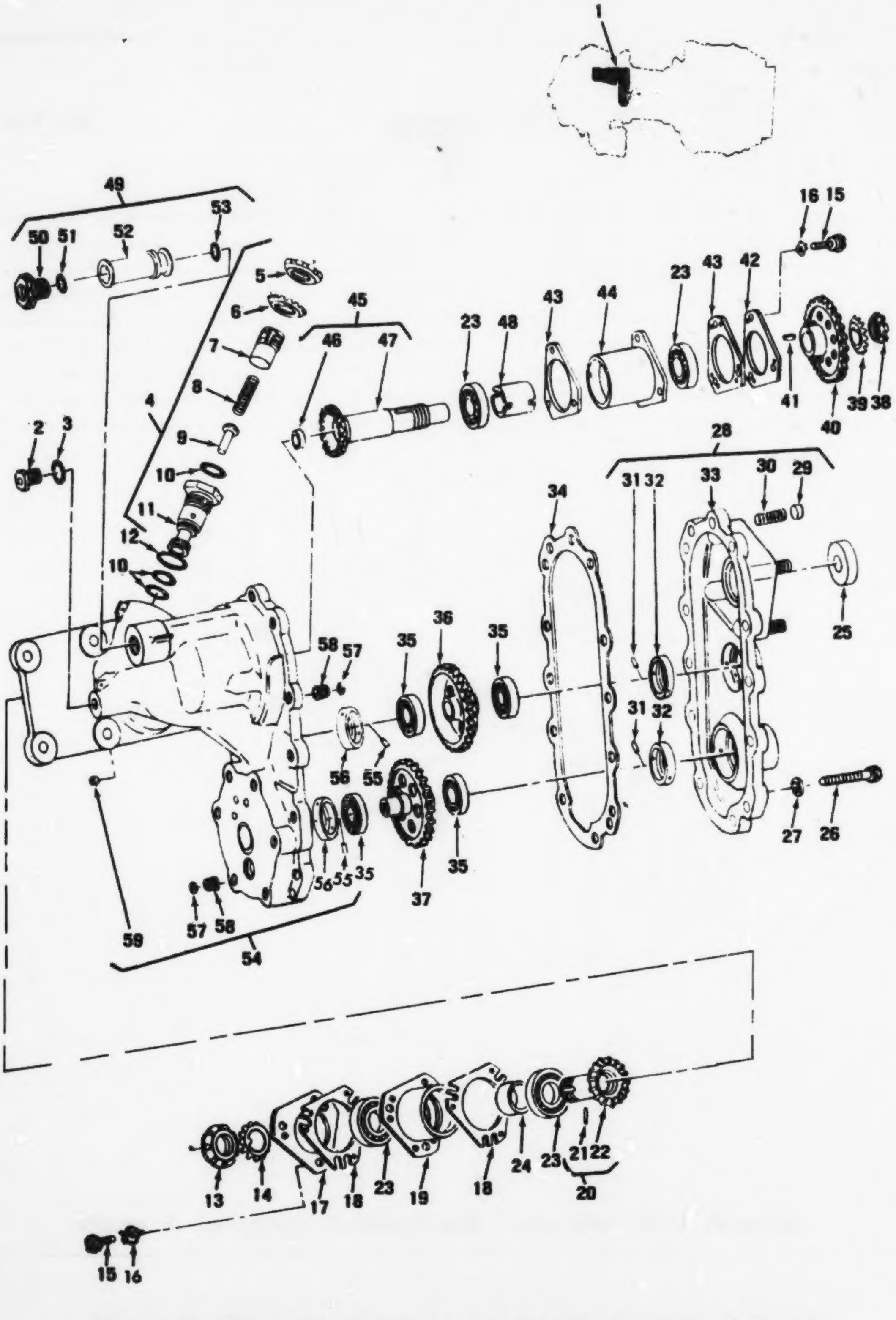

Figure 9. Overspeed Governor and Tachometer Drive Assembly

(1) ILLUSTRATION (a) FIG NO	(b) ITEM NO	(2) SMR CODE	(3) NATIONAL STOCK NUMBER	(4) FSCM	(5) PART NUMBER	(6) DESCRIPTION USABLE ON CODE	(7) U/M	(8) QTY INC IN UNIT
						GROUP 0402 OVERSPEED GOVERNOR AND TACHOMETER DRIVE ASSEMBLY		
5	1	PAODD	2840-00-853-3387	51547	1-160-500-04	DRIVE ASSEMBLY,OVER SEE FIG.8 FOR BKDN	EA	1
5	2	PAOZZ	5365-00-144-6563	96906	MS5404-02	.PLUG,MACHINE THR	EA	1
5	3	PCOZZ	5330-00-579-7948	80205	NAS617-2	.PACKING,PREFORME	EA	1
5	4	PAFDD	2840-00-537-2010	51547	1-160-420-01	.VALVE ASSEMBLY,RELI	EA	1
5	5	PAOZZ	5310-00-842-7812	96906	MS172322	..NUT,PLAIN,ROUND	EA	1
5	6	PAOZZ	5310-00-814-7325	96906	MS172272	..WASHER,KEY	EA	1
5	7	PAFZZ	2840-00-537-2038	51547	1-160-425-01	..SCREW,ADJUSTING,REL	EA	1
5	8	PAFZZ	5360-00-831-0274	51547	1-160-452-01	..SPRING,HELICAL,COMP	EA	1
5	9	PAFZZ	2840-00-472-8886	51547	1-160-427-01	..PLUNGER,RELIEF VALV	EA	1
5	10	PCFZZ	5330-00-725-5254	96906	MS29561-014	..PACKING,PREFORME	EA	1
5	11	PAFZZ	2840-00-587-7090	51547	1-160-424-01	..BODY,RELIEF VALVE,C	EA	1
5	12	PAOZZ	5330-00-810-5655	51547	STD3017E8	.PACKING,PREFORMED	EA	1
5	13	PAOZZ	5310-00-842-0885	51547	1-160-404-01	.NUT,PLAIN,ROUND	EA	1
5	14	PAOZZ	5310-00-837-6562	51547	1-160-403-01	.WASHER,KEY	EA	1
5	15	PAOZZ	5305-00-853-3500	51547	1-160-451-01	.SCREW,MACHINE	EA	4
5	16	PAOZZ	5310-00-770-8360	51547	STD3023M1	.WASHER,TAB	EA	4
5	17	PAOZZ	3110-00-472-5586	51547	1-160-415-01	.PLATE,RETAINING,BEA	EA	1
5	18	PAOZZ	5365-00-883-5727	51547	1-160-416-02	.SHIM,LINER,BEARING,	EA	1
5	19	PAOZZ	3130-00-882-4656	51547	1-160-414-02	.LINER,BEARING HOUSI	EA	1
5	20	PAOZZ	3040-00-533-3870	51547	1-160-480-01	.GEARSHAFT ASSEMBLY,	EA	1
5	21	XAOZZ		96906	MS16562-223	..PIN,SPRING	EA	1
5	22	XAOZZ		51547	1-160-412-01	..GEARSHAFT,BEVEL	EA	1
5	23	PAOZZ	3110-00-580-3254	51547	1-300-004	.BEARING,BALL,ANNULA	EA	4
5	24	PAOZZ	5365-00-833-8851	51547	1-160-418-02	.SPACER,SLEEVE	EA	1
5	25	PAOZZ	5330-00-175-1224	51547	1-300-235	.SEAL,PLAIN ENCASED	EA	1
5	26	PAOZZ	5306-00-207-5725	88044	AN103712	.BOLT,MACHINE	EA	12
5	27	PAOZZ	5310-00-167-0834	88044	AN960-10L	.WASHER,FLAT	EA	12
5	28	PAODD	2840-00-533-3822	51547	1-160-450-01	.COVER ASSEMBLY,OVER	EA	1
5	29	PAOZZ	5365-00-535-3668	96906	MS51990-105	..RING,LOCK,SERRATED	EA	1
5	30	PAOZZ	5307-00-837-8502	51547	1-300-267-01	..STUD,LOCKED IN	EA	4
5	31	PAOZZ	5315-00-552-7566	96906	MS5486-03	..PIN,STRAIGHT,HEA	EA	4
5	32	PAOZZ	5365-00-587-7091	51547	1-160-429-01	..SPACER,SLEEVE	EA	2
5	33	XAOZZ		51547	1-160-441-01	..COVER	EA	1
5	34	PAOZZ	5330-00-335-6525	51547	1-160-443-01	.GASKET,HOUSING	EA	1
5	35	PAOZZ	3110-00-580-3253	51547	1-300-003	.BEARING,BALL,ANNULA	EA	4
5	36	PAOZZ	3020-00-228-6215	51547	1-160-422-02	.GEAR,SPUR	EA	1
5	37	PAOZZ	3020-00-010-5512	51547	1-160-423-02	.GEAR,SPUR	EA	1
5	38	PAOZZ	5310-00-880-5671	96906	MS172238	.NUT,PLAIN,ROUND	EA	1

(1) ILLUSTRATION (a) FIG NO.	(b) ITEM NO.	(2) SMR CODE	(3) NATIONAL STOCK NUMBER	(4) FSCM	(5) PART NUMBER	(6) DESCRIPTION USABLE ON CODE	(7) U/M	(8) QTY INC IN UNIT
5	39	PADZZ	5310-00-666-2856	96906	MS172203	.WASHER,KEY	EA	1
5	40	PADZZ	3020-00-010-5511	51547	1-160-419-02	.GEAR,SPUR	EA	1
5	41	XBDZZ	5315-00-735-6535	51547	5103057-2	.KEY,MACHINE	EA	1
5	42	PADZZ	2840-00-600-6650	51547	1-160-448-01	.PLATE,RETAINER,GEAR	EA	1
5	43	PADZZ	5365-00-830-4254	51547	1-160-439-01	.SHIM	EA	1
5	44	PADZZ	2840-00-533-3814	51547	1-160-421-01	.LINER,BEARING,SHAFT	EA	1
5	45	PADZZ	3040-00-533-3865	51547	1-160-490-01	.GEARSHAFT ASSEMBLY	EA	1
5	46	PADZZ	2840-00-475-0052	51547	1-080-037-01	..PLUG,SHAFTGEAR,ACCE	EA	1
5	47	XADZZ		51547	1-160-417-01	..GEARSHAFT,BEVEL	EA	1
5	48	PADZZ	2840-00-550-0542	51547	1-160-418-01	.SPACER,BEARING,OVER	EA	1
5	49	XADZZ		51547	1-160-410-05	.HOUSING-FILTER ASSY	EA	1
5	50	PADZZ	5365-00-105-3887	51547	1-160-432-02	..PLUG,MACHINE THREAD	EA	1
5	51	PCDZZ	5330-00-584-0150	80205	NAS617-5	..PACKING,PREFORMED	EA	1
5	52	PADZZ	2840-00-105-5321	51547	1-330-425	..FILTER ASSEMBLY,OVE	EA	1
5	53	PCDZZ	5330-00-542-1420	96906	MS29561-010	..PACKING,PREFORMED	EA	1
5	54	PAFFF	2840-00-860-5466	51547	1-160-510-05	..HOUSING,GEARBOX,TOP	EA	1
5	55	PAFZZ	5315-00-552-7566	96906	MS9486-03	...PIN,STRAIGHT,HEA	EA	4
5	56	PAFZZ	5365-00-587-7051	51547	1-160-429-01	...SPACER,SLEEVE	EA	2
5	57	PAFZZ	5365-00-633-1854	01556	RR5A15	...RING,LOCK,KEYED	EA	1
5	58	PAFZZ	5340-00-553-3302	96906	MS21208F1-15	...INSERT,SCREW THREAD	EA	[illegible]
5	59	PAFZZ	5340-00-250-4460	96906	MS124735	...INSERT,SCREW THREAD	EA	3

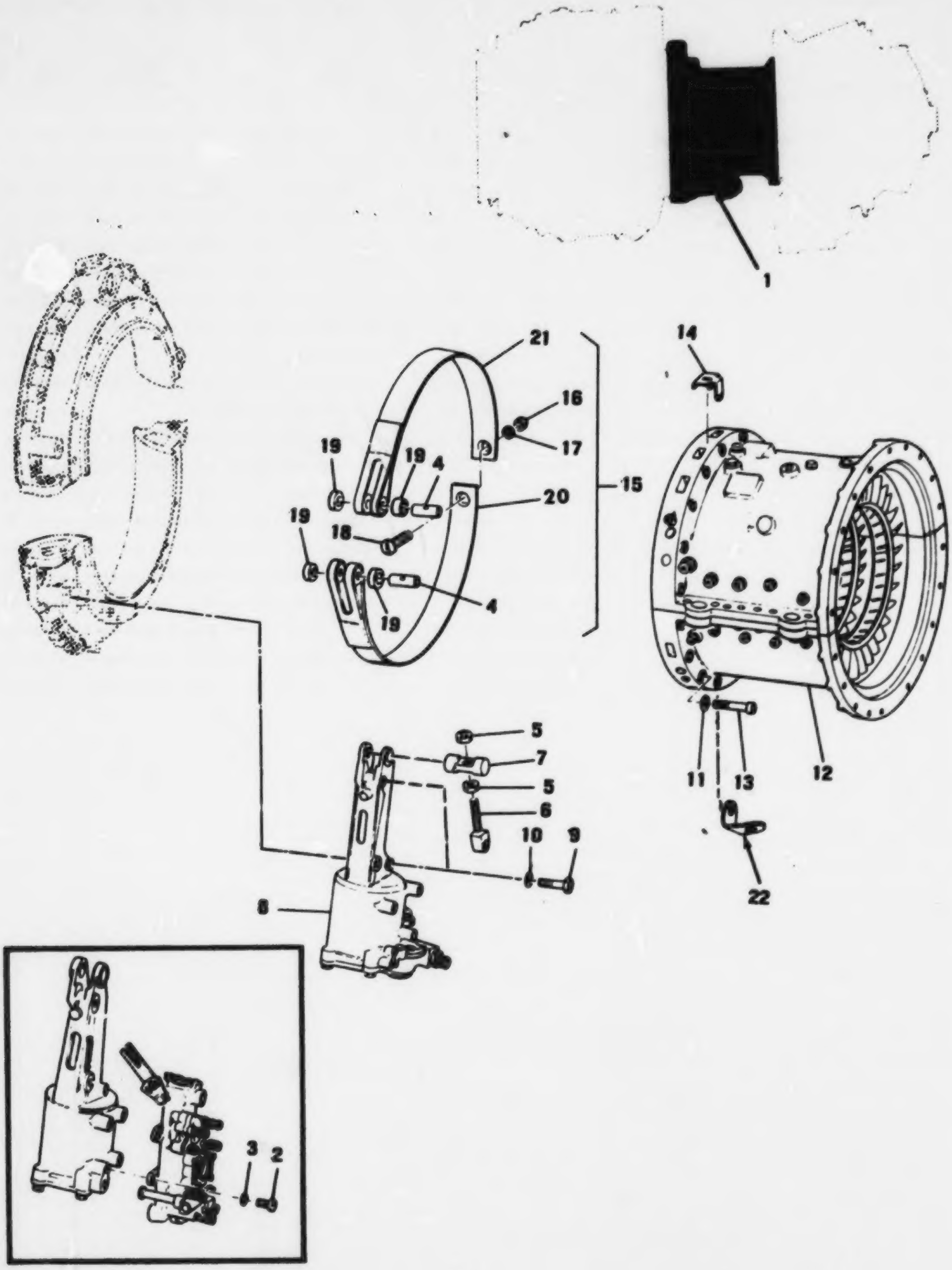

Figure 10. Interstage Air Bleed and Compressor and Impeller Housing Assembly

(1) ILLUSTRATION		(2)	(3)	(4)	(5)	(6) DESCRIPTION	(7)	(8)
(a) FIG NO	(b) ITEM NO	SMR CODE	NATIONAL STOCK NUMBER	FSCM	PART NUMBER	USABLE ON CODE	U/M	QTY INC IN UNIT
						GROUP 0402 INTERSTAGE AIR BLEED AND COMPRESSOR AND IMPELLER HOUSING ASSEMBLY		
10	1	AOFDD		51547	1-100-630-08	CASE AND VANE ASSEM SEE FIG.4 FOR NHA................EZ6,EZ7	EA	1
10	1	AOFDD		51547	1-130-640-36	HOUSING SUBASSEMBLY SEE FIG.4 FOR NHA...............EZL	EA	1
10	2	PAOZZ	5306-00-258-2668	88044	AN123713	.BOLT,MACHINE..EZ6,EZ7	EA	4
10	3	PAOZZ	5310-00-167-0824	88044	AN960-10L	.WASHER,FLAT...EZ6,EZ7	EA	4
10	4	PAOZZ	5315-00-514-6361	96906	MS9390-57	.PIN,STRAIGHT,HEZ..	EA	2
10	5	PAOZZ	5310-00-833-5446	51547	1-160-272-01	.NUT,PLAIN,HEXAGON..	EA	2
10	6	PAOZZ	2840-00-605-5137	51547	1-160-520-01	.SCREW ASSEMBLY,INTE..	EA	1
10	7	PAOZZ	2840-00-522-2318	51547	1-160-254-01	.PIN,INTERSTAGE AIRB..	EA	1
10	8	PAOOO	2840-00-543-2545	51547	1-170-050-09	.ACTUATOR ASSEMBLY,I SEE FIG.13 FOR BREAKDOWN........EZ6,EZ7	EA	1
10	8	PAOOO	2840-00-949-5456	51547	1-170-050-28	.ACTUATOR ASSEMBLY,I SEE FIG.13 FOR BREAKDOWN........EZL	EA	1
10	9	PAOZZ	5306-00-527-5508	88044	AN134026	.BOLT,MACHINE..	EA	2
10	9	PAOZZ	5306-01-015-0487	96906	MS9944-27	.BOLT,MACHINE U/O PN 1-101-370-03....................EZL	EA	2
10	10	PAOZZ	5310-00-167-0837	88044	AN960-616L	.WASHER,FLAT...	EA	2
10		PAOZZ	5310-01-034-5125	51547	5103064-6	.NUT,SELF-LOCKING,EX U/O PN 1-101-370-03..................EZL	EA	2
10	11	PAOZZ	5310-00-167-0835	88044	AN960-416L	.WASHER,FLAT...	EA	18
10	12	AOOOD		51547	1-100-080-06	.CASE AXIAL COMPRESS SEE FIG. 3 FOR BREAKDOWN........EZ6,EZ7	EA	1
10	12	AOOOD		51547	1-130-140-09	.CASE ASSEMBLY SEE FIG. 3 FOR BREAKDOWN..............EZL	EA	1
10	13	PAOZZ	5306-00-061-7315	96906	MS9089-25	.BOLT,MACHINE..	EA	18
10	13	PAOZZ	5306-01-013-5305	96906	MS9924-32	.BOLT,MACHINE U/W PN 1-101-370-03....................EZL	EA	1
10	13	PAOZZ	5306-01-015-3450	96906	MS9924-25	.BOLT,MACHINE U/W PN 1-101-370-03....................EZL	EA	17
10	14	PAOZZ	5340-00-754-6135	51547	1-160-253-01	.CLIP,BAND RETAINGIN...	EA	7
10	15	AOOOO		51547	1-160-820-04	.BAND ASSEMBLY,INTER..	EA	1
10	16	PAOZZ	5310-00-807-1465	96906	MS21042-5	..NUT,SELF-LOCKING,EX..	EA	1
10	17	PAOZZ	5310-00-167-0820	88044	AN960-516	..WASHER,FLAT...	EA	1
10	18	PAOZZ	5305-00-830-1443	51547	1-160-265-01	..SCREW,MACHINE..	EA	1
10	19	PAOZZ	3120-00-904-2435	51547	1-160-343-01	..BEARING,SLEEVE...	EA	4
10	20	PAOZZ	2840-00-948-5358	51547	1-160-245-01	..BAND,COMPRESSOR..	EA	1
10	21	PAOZZ	2840-00-948-5351	51547	1-160-244-01	..BAND,COMPRESSOR..	EA	1
10	22	PAOZZ	5340-00-583-6664	51547	1-160-336-01	.BRACKET,ANGLE..................................EZL	EA	1

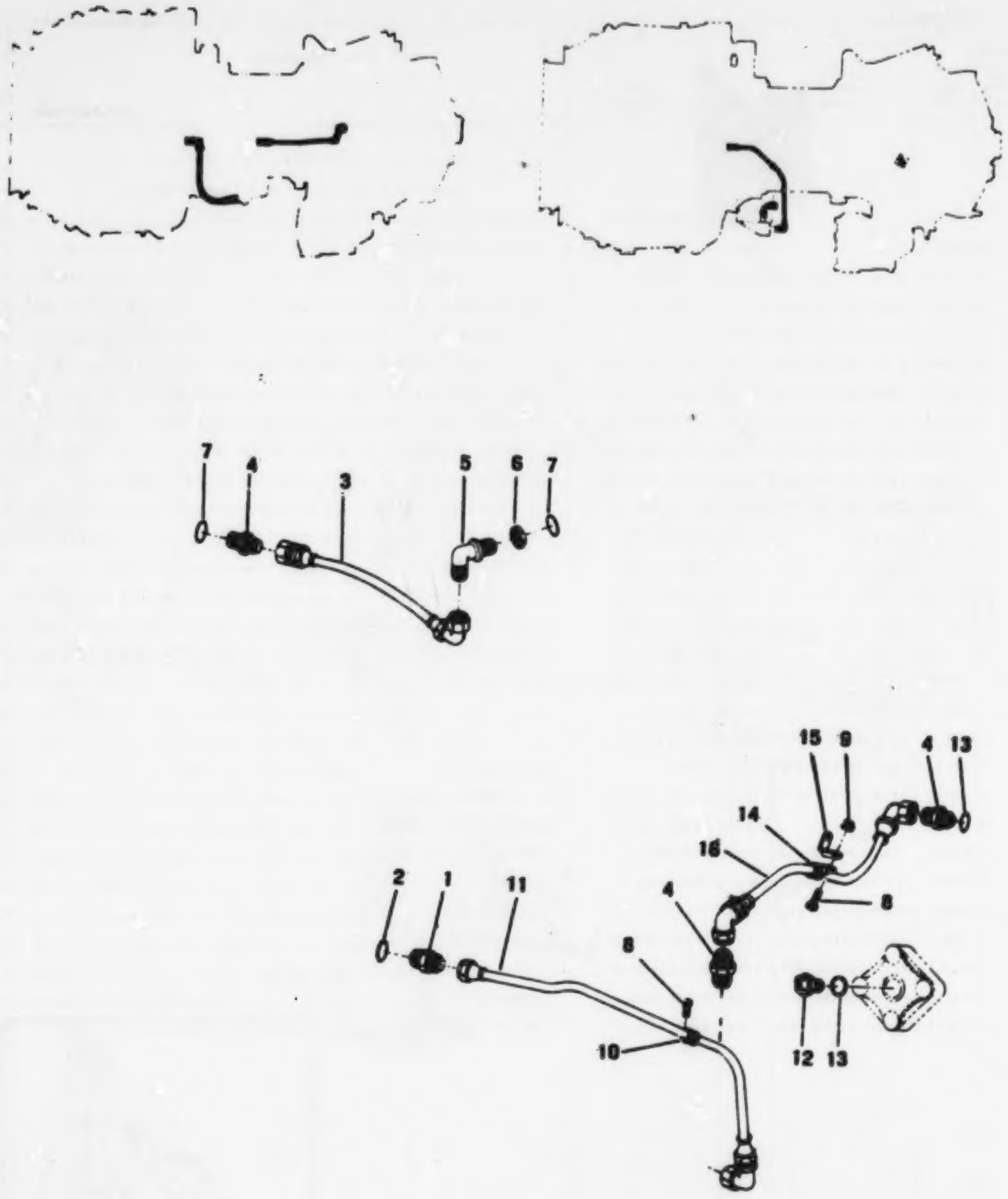

Figure 11. Interstage Air Bleed Lines and Related Parts

(1) ILLUSTRATION		(2)	(3)	(4)	(5)	(6)	(7)	(8)
(a) FIG NO	(b) ITEM NO	SMR CODE	NATIONAL STOCK NUMBER	FSCM	PART NUMBER	DESCRIPTION USABLE ON CODE	U/M	QTY INC IN UNIT
						GROUP 0432 INTERSTAGE AIR BLEED LINES AND RELATED PARTS (T53-L-11C,T53-L-11D)		
11	1	PAOZZ	4730-00-884-6516	96906	MS2435206	NIPPLE,TUBE....................F76,F77	EA	2
11	2	PAOZZ	5330-00-811-1445	80205	NAS1555-6	PACKING,PREFORMED....................F76,F77	EA	2
11	3	PAOZZ	4720-00-856-4356	51547	1-300-244	HOSE ASSEMBLY,NONME....................F76,F77	EA	1
11	4	PAOZZ	4730-00-834-9560	96906	MS2435204	NIPPLE,TUBE....................F76,F77	EA	1
11	5	PAOZZ	4730-00-725-4351	96906	MS2435404	ELBOW,TUBE....................F76,F77	EA	1
11	6	PAOZZ	5310-00-282-3823	96906	MS24400D4	NUT,PLAIN,HEXAGON....................F76,F77	EA	1
11	7	PCOZZ	5330-00-805-2566	96906	MS28778-4	PACKING,PREFORMED....................F76,F77	EA	2
11	8	PAOZZ	5305-00-150-5212	88044	AN502-10-8	SCREW,MACHINE....................F76,F77	EA	2
11	9	PAOZZ	5310-00-807-1467	96906	MS21042-3	NUT,SELF-LOCKING,EX....................F76,F77	EA	1
11	10	PAOZZ	5340-00-533-3514	81556	EA8700-7	CLAMP,LOOP....................F76,F77	EA	1
11	11	PAOZZ	4720-00-065-1525	51547	1-300-202	HOSE ASSEMBLY,NONME....................F76,F77	EA	1
11	12	PAOZZ	5365-00-965-1158	96906	MS5404-34	PLUG,MACHINE THREAD....................F76,F77	EA	1
11	13	PAOZZ	5330-00-555-1048	51547	STC3017E4	PACKING,PREFORMED....................F76,F77	EA	1
11	14	PAOZZ	5340-00-532-3512	81556	EA8700-5	CLAMP,LOOP....................F76,F77	EA	1
11	15	PAOZZ	5340-00-983-6664	51547	1-160-306-01	BRACKET,ANGLE....................F76,F77	EA	1
11	16	PAOZZ	4720-00-057-4167	51547	1-300-224	HOSE ASSEMBLY,NONME....................F76,F77	EA	1

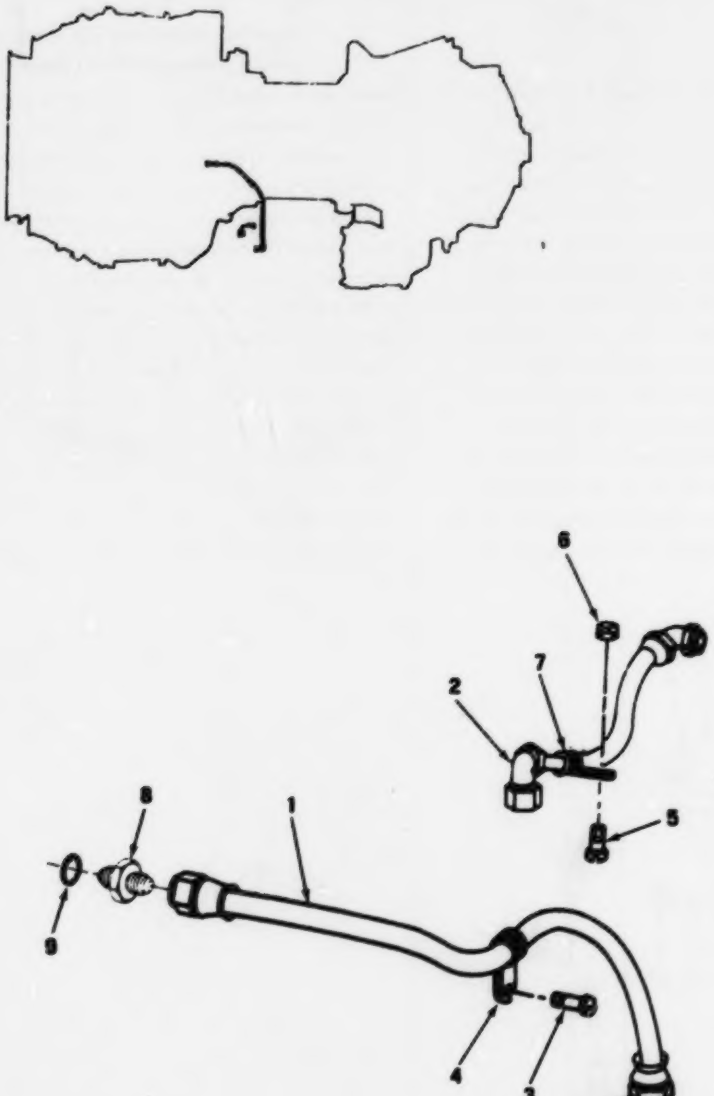

Figure 12. Interstage Air Bleed Lines

(1) ILLUSTRATION (a) FIG NO	(b) ITEM NO	(2) SMR CODE	(3) NATIONAL STOCK NUMBER	(4) FSCM	(5) PART NUMBER	(6) DESCRIPTION USABLE ON CODE	(7) U/M	(8) QTY INC IN UNIT
						GROUP 0402 INTERSTAGE AIR BLEED LINES		
						(T53-L-13B)		
12	1	PAOZZ	4720-00-065-1525	81547	1-300-202	HOSE ASSEMBLY,NONME ....EZL	EA	1
12	2	PAOZZ	4720-00-966-2232	81547	1-300-138	HOSE ASSEMBLY,NONME ....EZL	EA	1
12	3	PAOZZ	5305-00-150-5213	88044	AN502-10-6	SCREW,MACHINE ....EZL	EA	1
12	4	PAOZZ	5340-00-533-3514	81556	EAB700-7	CLAMP,LOOP ....EZL	EA	1
12	5	PAOZZ	5305-00-150-5212	88044	AN502-10-8	SCREW,MACHINE ....EZL	EA	1
12	6	PAOZZ	5310-00-807-1467	96906	MS21042-3	NUT,SELF-LOCKING,EX ....EZL	EA	1
12	7	PAOZZ	5340-00-533-3512	81556	EAB700-5	CLAMP,LOOP ....EZL	EA	1
12	8	PAOZZ	4730-00-182-9021	96906	MS24392J6	NIPPLE,TUBE ....EZL	EA	1
12	9	PAOZZ	5330-00-811-1445	80205	NAS1595-6	PACKING,PREFORMED ....EZL	EA	1

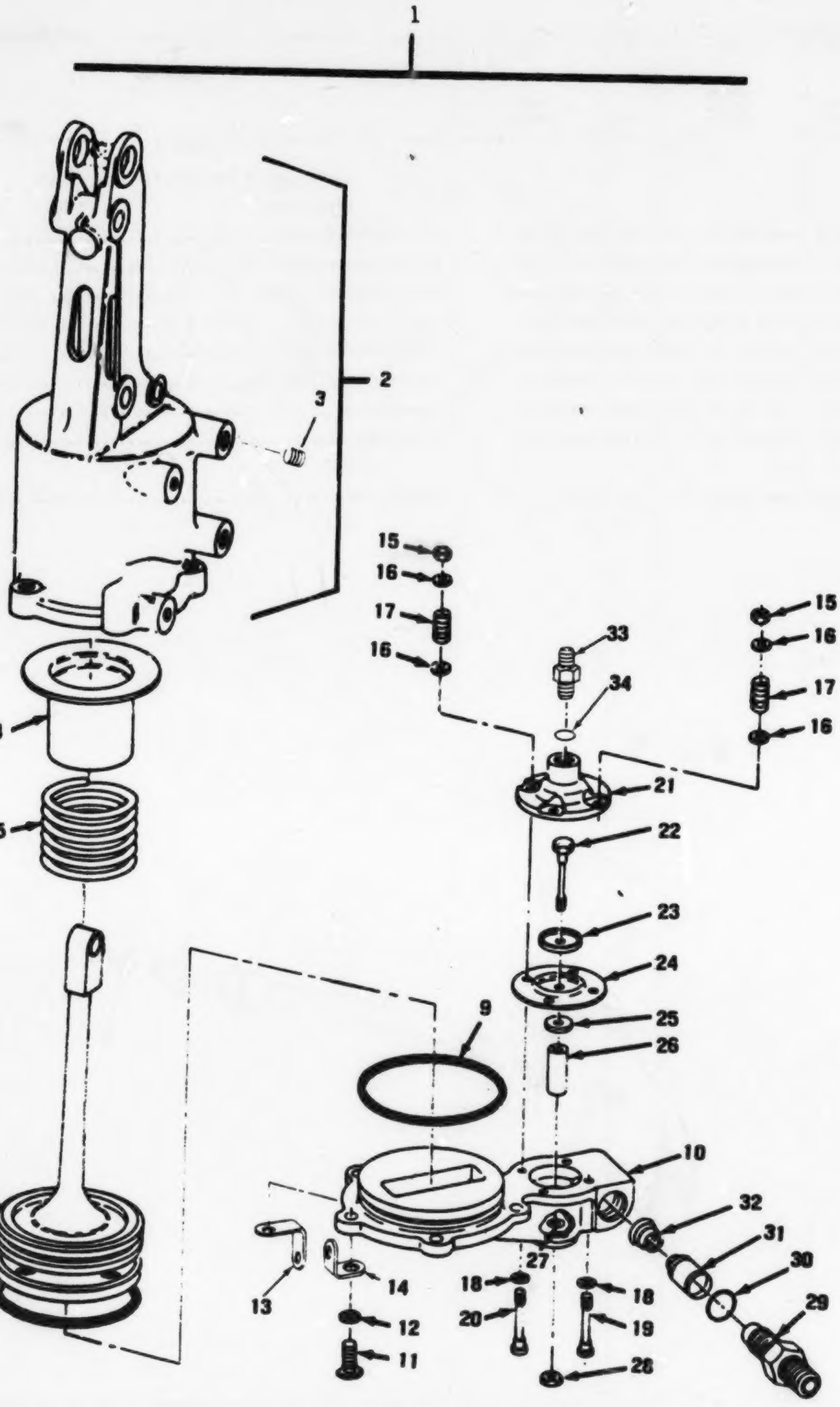

Figure 13. Interstage Bleed Actuator Assembly

(1) ILLUSTRATION (a) FIG NO	(b) ITEM NO	(2) SMR CODE	(3) NATIONAL STOCK NUMBER	(4) FSCM	(5) PART NUMBER	(6) DESCRIPTION USABLE ON CODE	(7) U/M	(8) QTY INC IN UNIT
						GROUP 0402 INTERSTAGE BLEED ACTUATOR ASSEMBLY		
13	1	PAOOO	2840-00-543-2545	51547	1-170-053-09	ACTUATOR ASSEMBLY,I SEE FIG.10 FOR NHA..............F26,F27	EA	1
13	1	PAOOO	2840-00-545-5456	51547	1-170-053-08	ACTUATOR ASSEMBLY,I SEE FIG.10 FOR NHA..............F2L	EA	1
13	2	PAOOO	2840-00-561-1355	51547	1-160-760-04	.HOUSING ASSY,ACTUAT....................................	EA	1
13	3	PAFZZ	5340-00-557-3302	96906	MS21209F1-15	..INSERT,SCREW THREAD............................F26,F27	EA	6
13	4	PAOZZ	2840-00-542-5755	51547	1-160-341-01	.SEAT,HELICAL COMPRE....................................	EA	1
13	5	PAOZZ	5360-00-533-3805	51547	1-160-268-02	.SPRING,HELICAL,COMP....................................	EA	1
13	6	PAOZZ	2840-00-543-2525	51547	1-160-342-01	.PISTON,LINEAR ACTUA....................................	EA	1
13	7	PAOZZ	2840-00-733-5627	51547	1-300-237-01	.SEAL,ACTUATOR ASSEM....................................	EA	1
13	8	PAOZZ	5330-00-165-1550	81349	M83248-1-232	.PACKING,PREFORMED......................................	EA	1
13	9	PAOZZ	5330-00-167-5135	81349	M83248-1-145	.PACKING,PREFORMED.........................F26,F27	EA	1
13	10	PAOZZ	2840-00-561-1357	51547	1-160-591-03	.COVER,ACTUATOR..................................F26,F27	EA	1
13	10	PAOZZ	2840-00-545-5457	51547	1-160-591-07	.COVER,ACTUATOR,INTE...............................F2L	EA	1
13	11	PAFZZ	5306-00-177-5558	96906	MS9530-09	.BOLT,MACHINE...	EA	6
13	12	PAOZZ	5310-00-167-0835	88044	AN960-416L	.WASHER,FLAT..	EA	6
13	13	PAOZZ	5340-00-660-1154	51547	1-160-054-01	.BRACKET,ANGLE...................................F26,F27	EA	1
13	14	PAOZZ	5340-00-775-6514	51547	1-160-468-01	.BRACKET,ANGLE..	EA	1
13	15	PAOZZ	5310-00-807-1474	96906	MS21042L3	.NUT,SELF-LOCKING,EX....................................	EA	4
13	16	PAOZZ	5310-00-167-0834	88044	AN960-10L	.WASHER,FLAT..	EA	8
13	17	PAOZZ	5360-00-533-3856	51547	1-190-049-01	.SPRING,HELICAL,COMP....................................	EA	4
13	18	PAOZZ	5310-00-088-8008	51547	1-160-605-01	.WASHER,FLAT..	EA	4
13	19	PAOZZ	5305-00-655-6573	96906	MS35266-71	.SCREW,MACHINE..	EA	2
13	20	PAFZZ	5305-00-622-5466	96906	MS35266-68	.SCREW,MACHINE..	EA	2
13	21	PAOZZ	2840-00-561-1358	51547	1-160-592-03	.CAP,RELAY VALVE..	EA	1
13	22	PAOZZ	4730-00-563-5333	51547	1-160-593-01	.BOLT,FLUID PASSAGE.....................................	EA	1
13	23	PAOZZ	5310-00-845-0556	51547	1-180-017-01	.WASHER,RECESSED..	EA	1
13	24	PAOZZ	2595-00-825-3500	51547	1-300-582-01	.DIAPHRAGM,VALVE..	EA	1
13	25	PAOZZ	5310-00-845-0555	51547	1-190-004-01	.WASHER,FLAT..	EA	1
13	26	PAOZZ	5365-00-561-1368	51547	1-160-598-01	.SPACER,SLEEVE...................................F26,F77	EA	1
13	26	PAOZZ	2840-00-545-5471	51547	1-160-617-02	.SPACER,VALVE,AIR BL...............................F2L	EA	1
13	27	PAOZZ	2595-00-563-1117	51547	1-160-596-01	.SEAT,VALVE......................................F26,F27	EA	1
13	27	PAOZZ	2595-00-867-8844	51547	1-160-596-03	.SEAT,VALVE,AIR BLEE...............................F2L	EA	1
13	28	PAOZZ	5310-00-558-4505	51547	1-160-597-01	.NUT,PLAIN,HEXAGON......................................	EA	1
13	29	PAOZZ	4730-00-803-7581	96906	MS24395D13	.REDUCER,TUBE...	EA	1
13	30	PAOZZ	5330-00-810-5455	80205	NAS1595-8	.PACKING,PREFORMED......................................	EA	1
13	31	PAOZZ	2545-00-482-5071	51547	2-300-361-01	.STRAINER ELEMENT,SE....................................	EA	1
13	32	PAOZZ	5360-00-087-3455	51547	2-160-267-01	.SPRING,HELICAL,COMP....................................	EA	1
13	33	PAOZZ	4730-00-834-5560	96906	MS24392D4	.NIPPLE,TUBE..	EA	1
13	34	PAOZZ	5330-00-555-1048	51547	STD3017E4	.PACKING,PREFORMED......................................	EA	1

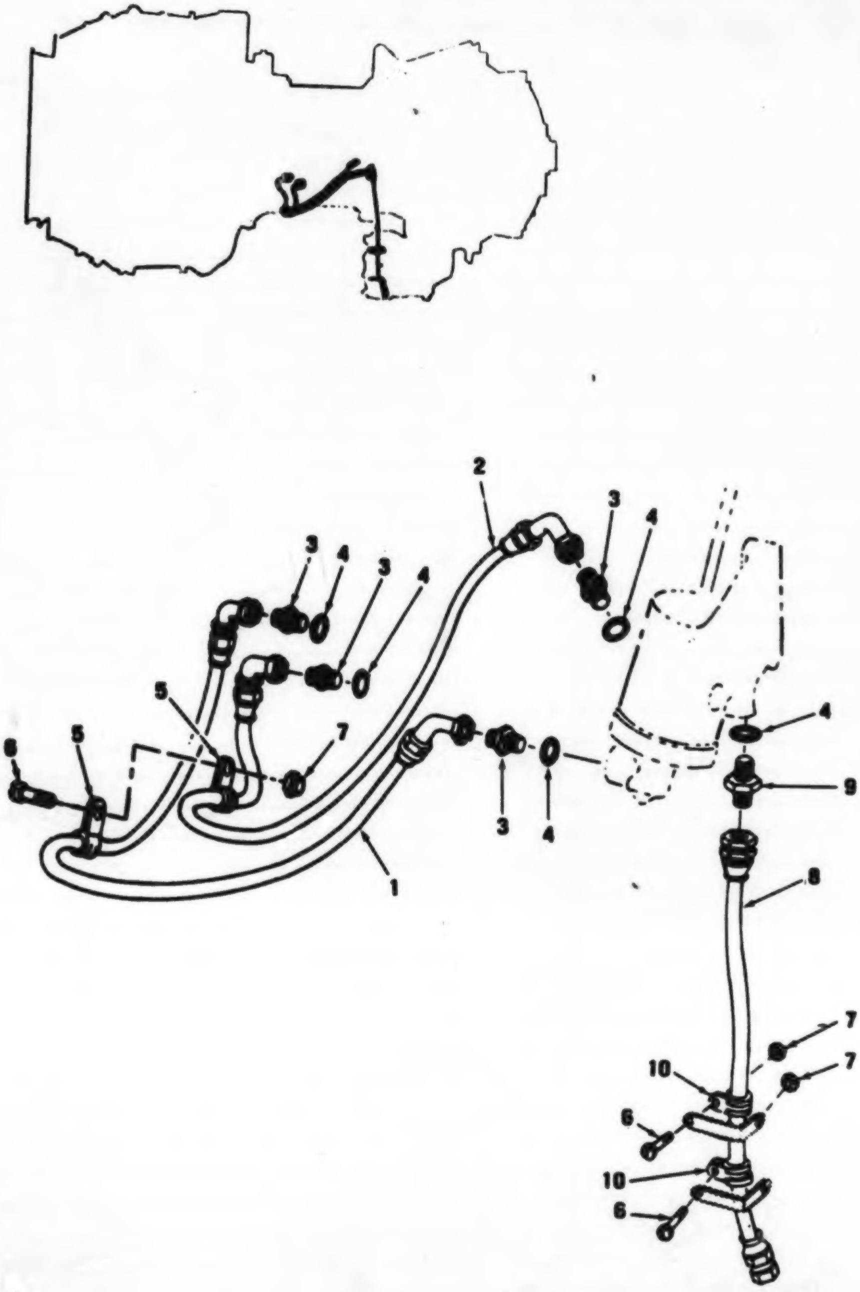

Figure 14. Air Inlet Guide Vane Actuator Hose Assembly and Related Parts (Sheet 1 of 2)

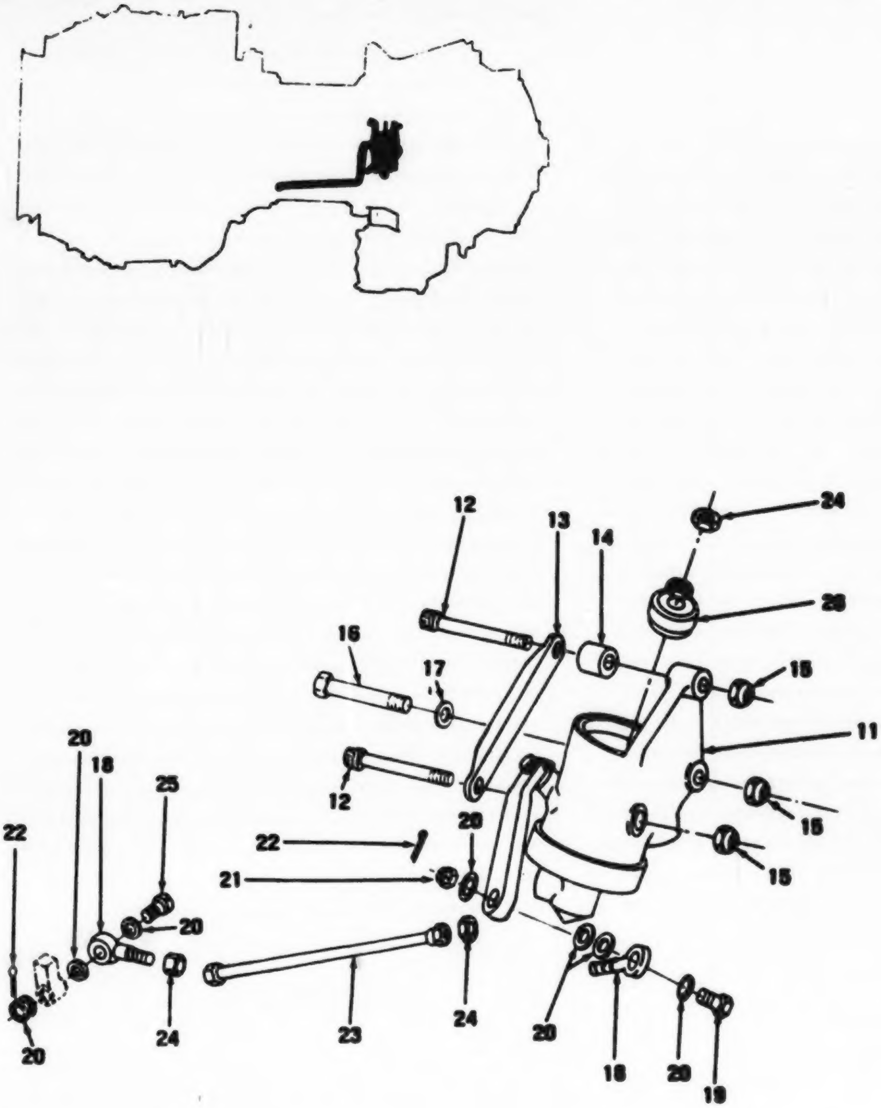

Figure 14. Air Inlet Guide Vane Actuator Hose Assembly and Related Parts (Sheet 2 of 2)

(1) ILLUSTRATION (a) FIG NO.	(b) ITEM NO.	(2) SMR CODE	(3) NATIONAL STOCK NUMBER	(4) FSCM	(5) PART NUMBER	(6) DESCRIPTION USABLE ON CODE	(7) U/M	(8) QTY INC IN UNIT
						GROUP 0402 AIR INLET GUIDE VANE ACTUATOR HOSE ASSEMBLY AND RELATED PARTS (T53-L-13B)		
14	1	PAOZZ	4720-00-988-2240	81547	1-300-137	HOSE ASSEMBLY,NONME.. ....F7L	EA	1
14	2	PAOZZ	4720-00-988-2233	81547	1-300-136	HOSE ASSEMBLY,NONME........F7L	EA	1
14	3	PAOZZ	4730-00-834-5580	96906	MS24395D4	NIPPLE,TUBE........F7L	EA	4
14	4	PCOZZ	5330-00-283-8028	96906	MS29512-04	PACKING,PREFORMED........F7L	EA	4
14	5	PAOZZ	5340-00-533-3512	81996	EAP700-5	CLAMP,LOOP........F7L	EA	2
14	6	PAOZZ	5305-00-150-5212	88044	AN502-10-8	SCREW,MACHINE........F7L	EA	3
14	7	PAOZZ	5310-00-807-1467	96906	MS21042-3	NUT,SELF-LOCKING,EX........F7L	EA	3
14	8	PAOZZ	4720-00-988-2206	81547	1-300-144	HOSE ASSEMBLY,NONME........F7L	EA	1
14	9	PAOZZ	4730-00-812-5036	96906	MS24395D3	REDUCER,TUBE........F7L	EA	1
14	10	PAOZZ	5340-00-533-3511	81996	FAB700-4	CLAMP,SUPPORT........F7L	EA	2
14	11	PAOFF	2840-00-924-8848	81547	1-180-150-01	ACTUATOR ASSEMBLY,I SEE FIG.15 FOR BREAKDOWN........F7L	EA	1
14	12	PAOZZ	5306-00-915-8913	96906	MS9147-35	BOLT,MACHINE........F7L	EA	2
14	13	PAOZZ	2840-00-957-9099	81547	1-180-210-01	SUPPORT ASSEMBLY,AC........F7L	EA	1
14	14	PAOZZ	5365-00-928-3878	81547	1-160-607-02	SPACER,SLEEVE........F7L	EA	1
14	15	PAOZZ	5310-00-807-1468	96906	MS21042-4	NUT,SELF-LOCKING,EX........F7L	EA	2
14	16	PAOZZ	5306-00-269-8884	88044	AN101130	BOLT,MACHINE........F7L	EA	1
14	17	PAOZZ	5310-00-167-0835	88044	AN960-416L	WASHER,FLAT........F7L	EA	1
14	18	PAOZZ	3120-00-904-9825	81547	1-300-341	CUP,LOCK,BEARING RE........F7L	EA	2
14	19	PAOZZ	5306-00-819-4549	88044	AN101916	BOLT,MACHINE........F7L	EA	1
14	20	PAOZZ	5310-00-167-0834	88044	AN960-10L	WASHER,FLAT........F7L	EA	8
14	21	PAOZZ	5310-00-088-4289	96906	MS17826-3	NUT,SELF-LOCKING,SL........F7L	EA	1
14	22	PAOZZ	5315-00-234-1856	96906	MS24665-155	PIN,COTTER........F7L	EA	2
14	23	PAOZZ	2840-00-925-2573	81547	1-180-160-01	TUBE ASSEMBLY,FEED........F7L	EA	1
14	24	PAOZZ	5310-00-947-9898	81547	2-161-055-01	NUT,PLAIN,HEXAGON........F7L	EA	3
14	25	PAOZZ	5306-00-837-8070	88044	AN101914	BOLT,MACHINE........F7L	EA	1
14	26	PAOZZ	2840-00-904-2475	81547	1-300-345	BEARING,SELF-ALIGNI........F7L	EA	1

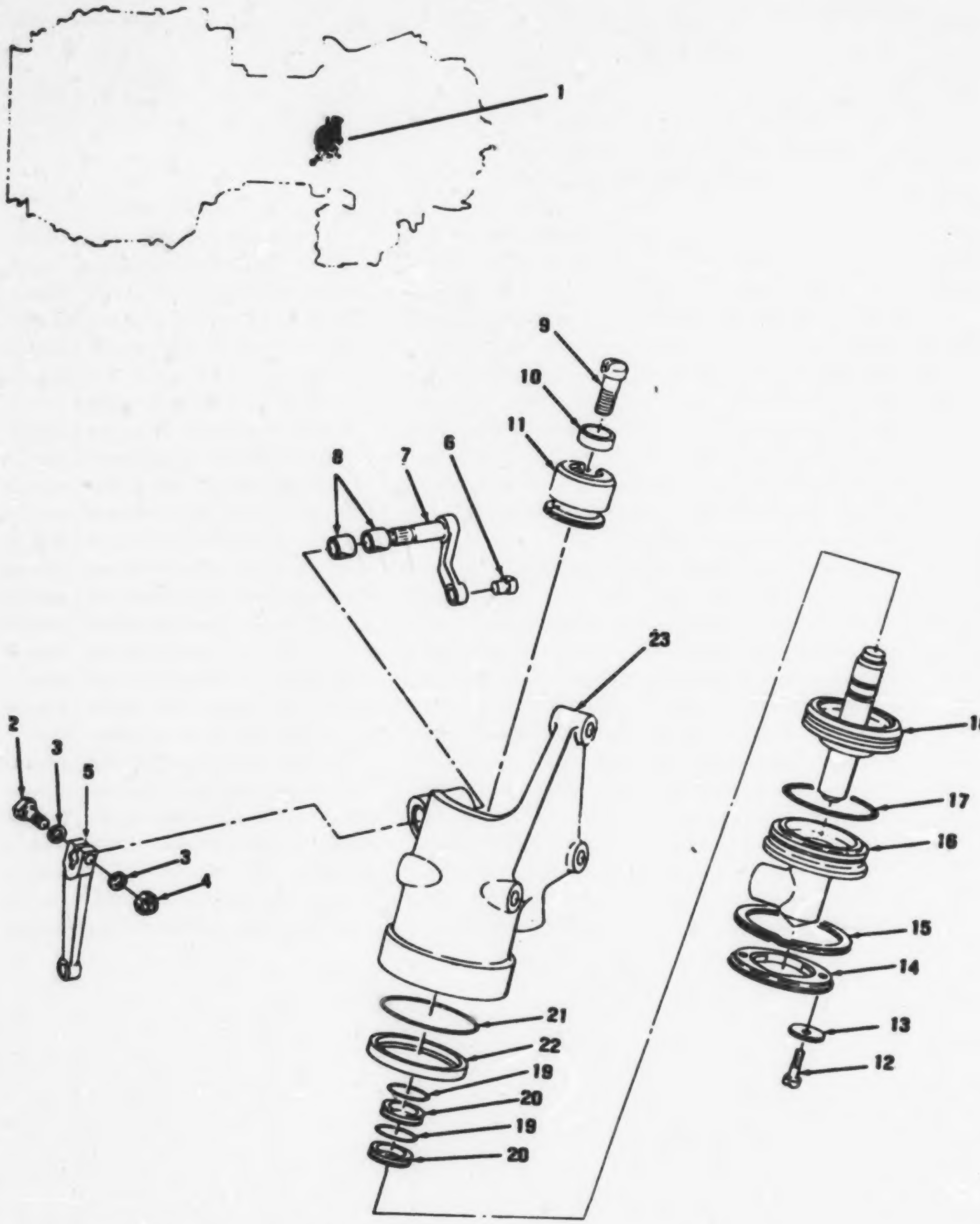

Figure 15. Actuator Assembly, Inlet Guide Vane

(1) ILLUSTRATION (a) FIG NO.	(b) ITEM NO.	(2) SMR CODE	(3) NATIONAL STOCK NUMBER	(4) FSCM	(5) PART NUMBER	(6) DESCRIPTION USABLE ON CODE	(7) U/M	(8) QTY INC IN UNIT
						GROUP 0402 ACTUATOR ASSEMBLY,INLET GUIDE VANE (T53-L-13B)		
15	1	PAOFF	2840-00-924-6448	51547	1-180-150-01	ACTUATOR ASSEMBLY,I SEE FIG.14 FOR NHA..............F7L	EA	1
15	2	PAOZZ	5306-00-615-4545	88044	AN101916	.BOLT,MACHINE..............F7L	EA	1
15	3	PAOZZ	5310-00-167-0834	88044	AN960-10L	.WASHER,FLAT..............F7L	EA	1
15	4	PAOZZ	5310-00-807-1467	96906	MS21042-3	.NUT,SELF-LOCKING,EX..............F7L	EA	1
15	5	PAOZZ	2840-00-947-6222	51547	1-180-105-02	.LEVER,REMOTE CONTRO..............F7L	EA	1
15	6	PAFZZ	5315-00-944-1093	51547	1-180-104-01	.PIN,STRAIGHT,HEADED..............F7L	EA	1
15	7	PAFZZ	2840-00-946-1456	51547	1-180-103-03	.LEVER,ACTUATOR INLE..............F7L	EA	1
15	8	PAFZZ	3120-00-853-3352	51547	1-300-339-01	.BEARING,SLEEVE..............F7L	EA	2
15	9	PAFZZ	5305-00-109-0521	51547	1-180-135-01	.SCREW,MACHINE..............F7L	EA	1
15	10	PAFZZ	5330-00-945-3911	51547	1-180-109-02	.RETAINER,PACKING..............F7L	EA	1
15	11	PAFZZ	2840-00-924-3562	51547	1-180-101-01	.CONNECTOR,BEARING..............F7L	EA	1
15	12	PAFZZ	5305-00-952-0999	88044	AN500AC5-5	.SCREW,MACHINE..............F7L	EA	2
15	13	PAFZZ	5310-00-944-8062	51547	1-180-114-01	.WASHER,FLAT..............F7L	EA	2
15	14	PAFZZ	2995-00-946-6603	51547	1-180-111-01	.RETAINER,ACTUATOR A..............F7L	EA	1
15	15	PAFZZ	5365-00-947-3961	51547	1-300-344-01	.RING,RETAINING..............F7L	EA	1
15	16	PAFZZ	2840-00-925-2980	51547	1-180-107-01	.HOUSING,ACTUATOR,IN..............F7L	EA	1
15	17	PAFZZ	5330-00-551-8252	96906	MS9021-030	.PACKING,PREFORMED..............F7L	EA	1
15	18	PAFZZ	2840-00-925-3028	51547	1-180-108-01	.PISTON,ACTUATOR,INL..............F7L	EA	1
15	19	PAFZZ	5330-00-551-9974	96906	MS9021-014	.PACKING,PREFORMED..............F7L	EA	1
15	20	PAFZZ	5330-00-946-4877	51547	1-300-355	.RETAINER,PACKING..............F7L	EA	1
15	21	PAFZZ	5330-00-599-2537	96906	MS29513-223	.PACKING,PREFORME..............F7L	EA	1
15	22	PAFZZ	5330-00-948-0999	51547	1-300-354	.PACKING,PREFORMED..............F7L	EA	1
15	23	XAOZZ		51547	1-180-106-01	.HOUSING,ACTUATOR,IN..............F7L	EA	1

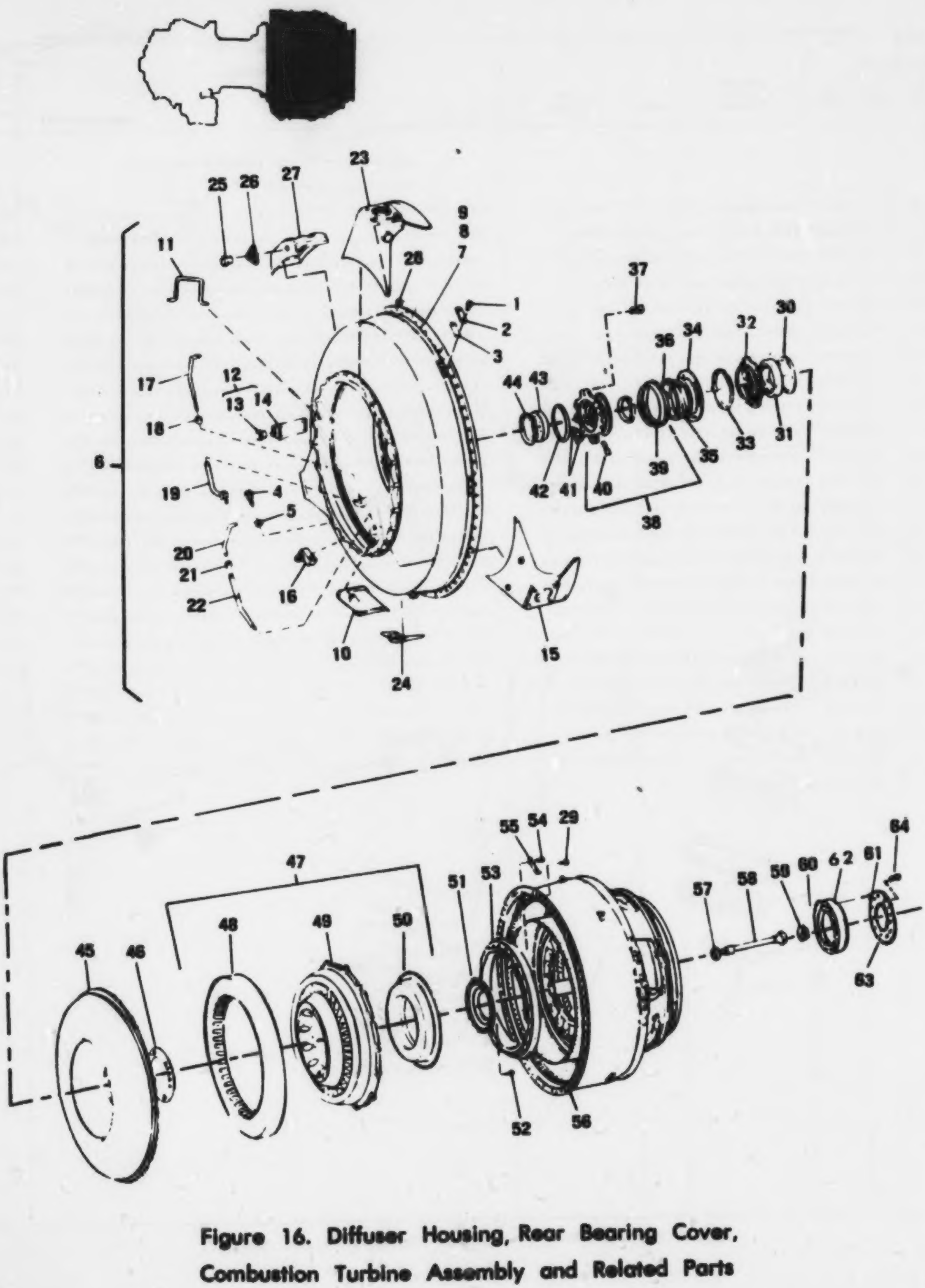

Figure 16. Diffuser Housing, Rear Bearing Cover, Combustion Turbine Assembly and Related Parts

(1) ILLUSTRATION (a) FIG NO	(b) ITEM NO	(2) SMR CODE	(3) NATIONAL STOCK NUMBER	(4) FSCM	(5) PART NUMBER	(6) DESCRIPTION USABLE ON CODE	(7) U/M	(8) QTY INC IN UNIT
						GROUP 0403 COMBUSTION SECTION DIFFUSER HOUSING,REAR BEARING COVER, COMBUSTION TURBINE ASSEMBLY AND RELATED PARTS (T53-L-11C,T53-L-11D)		
16	1	PAOZZ	5305-00-535-5230	96906	MS35275-243	SCREW,MACHINE....F76,F77	EA	4
16	2	PAOZZ	2840-00-752-6470	51547	1-110-273-01	PLATE,PROBE,DIFFUSE....F76,F77	EA	2
16	3	PAOZZ	5330-00-765-9906	51547	1-110-072-01	GASKET,THERMOCOUPLE....F76,F77	EA	2
16	4	PAOZZ	4730-00-535-3771	51547	1-110-114-01	BOLT,FLUID PASSAGE....F76,F77	EA	1
16	5	PAOZZ	5330-00-888-8858	51547	1-110-197-01	GASKET....F76,F77	EA	1
16	6	PAOOD	2840-00-561-1364	51547	1-110-230-01	HOUSING ASSEMBLY,DI....F76,F77	EA	1
16	7	XADDD		51547	1-110-230-02	.HOUSING ASSY,DIFFUS....F76,F77	EA	1
16	8	PAOZZ	2840-00-533-5113	51547	1-110-051-01	..VANE,DIFFUSER....F76,F77	EA	18
16	9	PAOZZ	2840-00-533-5135	51547	1-110-121-01	..VANE,GUIDE....F76,F77	EA	36
16	10	PAOZZ	2840-00-566-4634	51547	1-110-420-02	..MANIFOLD ASSEMBLY,I....F76,F77	EA	1
16	11	PAOZZ	5340-00-076-9006	51547	1-110-293-01	..STRAP....F76,F77	EA	1
16	12	PAOZZ	2840-00-754-3419	51547	1-110-250-01	..PAN ASSEMBLY,AIR OU....F76,F77	EA	1
16	13	XAOZZ		51547	1-110-299-01	..INSERT,SCREW THREAD....F76,F77	EA	1
16	14	XAOZZ		51547	1-110-124-01	..PAN,AIR OUTLET....F76,F77	EA	1
16	15	XAOOZ		51547	1-110-120-02	..MOUNT ASSEMBLY,REAR....F76,F77	EA	2
16	16	PAOZZ	2840-00-561-1383	51547	1-110-011-03	..CONNECTOR,OIL INLET....F76,F77	EA	1
16	17	PAOZZ	2840-00-563-6661	51547	1-110-331-02	..TUBE,OIL INLET DIFF....F76,F77	EA	1
16	18	PAOZZ	5365-00-567-7560	51547	1-110-309-01	..SPACER....F76,F77	EA	1
16	19	PAOZZ	2840-00-563-1101	51547	1-110-110-04	..TUBE ASSEMBLY,OIL I....F76,F77	EA	1
16	20	PAOZZ	2840-00-563-6663	51547	1-110-303-02	..TUBE,OIL DRAIN DIFF....F76,F77	EA	1
16	21	PAOZZ	5365-00-567-7561	51547	1-110-304-01	..SPACER....F76,F77	EA	1
16	22	PAOZZ	2840-00-566-2504	51547	1-110-305-02	..TUBE,OIL DRAIN,DIFF....F76,F77	EA	1
16	23	XAOOZ		51547	1-110-133-03	..MOUNT ASSEMBLY....F76,F77	EA	1
16	24	PAOZZ	2840-00-561-1351	51547	1-110-103-05	..MANIFOLD ASSEMBLY,C....F76,F77	EA	1
16	25	PAOZZ	3120-00-058-0461	51547	1-110-109-01	..BUSHING,SLEEVE....F76,F77	EA	1
16	26	PAOZZ	2840-00-561-1365	51547	1-110-103-02	..MANIFOLD,AIR BLEED,....F76,F77	EA	1
16	27	PAOZZ	2840-00-566-2505	51547	1-110-138-01	..FLANGE,BLEED AIR,AI....F76,F77	EA	1
16	28	PAFZZ	5310-00-807-1467	96906	MS21042-3	NUT,SELF-LOCKING,EX....F76,F77	EA	72
16	29	PAFZZ	5306-00-174-3663	88044	AN102810	BOLT,MACHINE....F76,F77	EA	72
16	30	PAOZZ	5365-00-585-4725	51547	1-300-259-01	RING,RETAINING....F76,F77	EA	1
16	31	PAOZZ	5330-00-072-5304	51547	1-300-216-02	SEAL ASSEMBLY,ROTOR....F76,F77	EA	1
16	32	PAOZZ	2840-00-085-7356	51547	1-110-315-04	HOUSING,BEARING SEA....F76,F77	EA	1
16	33	PAOZZ	5330-00-804-1565	51547	STD3000F48	PACKING,PREFORMED....F76,F77	EA	1
16	34	PAOZZ	5365-00-893-2333	51547	1-110-321-01	SHIM....F76,F77	EA	1
16	35	PAOZZ	5330-00-778-2266	51547	STD3019E63	PACKING,PREFORMED....F76,F77	EA	1
16	36	PAOZZ	2840-00-442-6222	51547	1-110-314-08	RETAINER,BEARING,CO....F76,F77	EA	1

(1) ILLUSTRATION (a) FIG NO.	(b) ITEM NO.	(2) SMR CODE	(3) NATIONAL STOCK NUMBER	(4) FSCM	(5) PART NUMBER	(6) DESCRIPTION USABLE ON CODE	(7) U/M	(8) QTY INC IN UNIT
16	37	PAOZZ	5305-00-831-4062	51547	STD3C53-50	SCREW,CAP,SOCKET HE.....F76,F77	EA	
16	38	PAODD	2840-00-442-6220	51547	1-110-310-37	HOUSING,ANTIFRICTIC.....F76,F77	EA	1
16	39	PAOZZ	3130-00-016-5429	51547	1-110-313-05	.LINER,BEARING HOUSI.....F76,F77	EA	1
16	40	PAFZZ	5315-00-503-7349	96906	MS9486-24	.PIN,STRAIGHT,HEA.....F76,F77	EA	1
16	41	PAOZZ	5330-00-550-2853	96906	MS9202-015	GASKET.....F76,F77	EA	2
16	42	PAOZZ	5330-00-753-1064	51547	1-300-249-01	SEAL,METAL,RING.....F76,F77	EA	1
16	43	PAOZZ	5330-00-403-4364	51547	1-300-215-01	SEAL,PLAIN ENCASED INTRCH PN 1-300-215-02.....F77	EA	1
16	43	PAOZZ	5330-00-523-2556	51547	1-300-215-02	SEAL,PLAIN ENCASED INTRCH PN 1-300-215-01.....F76,F77	EA	1
16	44	PAOZZ	5365-00-588-5322	81349	MILR27426T2CL1-3 687	RING,RETAINING.....F76,F77	EA	1
16	45	PAOZZ	2840-00-872-6126	51547	1-110-440-02	DEFLECTOR ASSY,COMB.....F76,F77	EA	1
16	46	PAFZZ	5365-00-736-3565	51547	1-110-321-02	SHIM.....F76,F77	EA	1
16	47	PAODD	2840-00-571-6279	51547	1-110-030-34	NOZZLE,TURBINE,TUBE.....F76,F77	EA	1
16	47	MODZZ		12757	153LC10095-1	.DOUBLER,FUEL NOZZLE.....F76,F77	EA	1
16	47	MODZZ		12757	153LC10095-3	.DOUBLER,FUEL NOZZLE.....F76,F77	EA	1
16	48	PAOZZ	2840-00-072-5451	51547	1-110-059-04	.LINER,COMBUSTION CH.....F76,F77	EA	1
16	49	PAOZZ	2840-00-835-6776	51547	1-110-061-16	.VANE,TURBINE NOZZLE.....F76,F77	EA	42
16	50	MODZZ		51547	1-110-101-03	.DEFLECTOR,TURBINE N.....F76,F77	EA	1
16	51	PAOZZ	2840-00-736-3584	51547	1-110-316-03	DEFLECTOR,AIR TURBI.....F76,F77	EA	1
16	52	PAOZZ	5305-00-555-6514	51547	1-110-151-01	SCREW,CAP,SOCKET HE.....F76,F77	EA	
16	53	PAOZZ	2840-00-556-3446	51547	1-110-334-05	FLANGE,TURBINE NOZZ.....F76,F77	EA	1
16	54	PAOZZ	5305-00-642-2430	51547	1-140-242-01	SCREW,MACHINE.....F76,F77	EA	24
16	55	PAOZZ	2840-00-860-5551	51547	1-140-245-01	LOCKING PLATE,NUT A.....F76,F77	EA	12
16	56	AODDD		51547	1-130-160-08	TURBINE ASSEMBLY,CC SEE FIG.18 FOR BREAKDOWN.....F76,F77	EA	1
16	57	PAOZZ	5365-00-766-8651	51547	1-140-217-01	SPACER,RING 0.010 TO 0.020 IN.THK.....F76,F77	EA	1
16	57	PAOZZ	5365-00-775-2510	51547	1-140-217-02	SPACER,RING 0.030 TO 0.040 IN.THK.....F76,F77	EA	1
16	57	PAOZZ	5365-00-756-5776	51547	1-140-217-03	SPACER,RING 0.050 TO 0.070 IN.THK.....F76,F77	EA	1
16	57	PAOZZ	5365-00-103-5810	51547	1-140-217-04	SPACER,RING 0.115 TO 0.135 IN.THK.....F76,F77	EA	1
16	58	PAOZZ	2840-00-778-2261	51547	1-140-030-11	BOLT,POWER SHAFT,TU.....F76,F77	EA	1
16	59	PAOZZ	5365-00-156-8558	51547	1-140-233-02	RING,EXTERNALLY THR.....F76,F77	EA	1
16	60	PAOZZ	5330-00-253-1722	51547	1-300-462	SEAL,RETAINER.....F76,F77	EA	1
16	61	PAOZZ	5306-00-656-8850	51547	1-140-059-01	SCREW,CAP,SOCKET HE.....F76,F77	EA	10
16	61	PAOZZ	5306-00-121-2205	51547	STD3C61-38	BOLT,MACHINE.....F77	EA	10
16	62	PAOZZ	2840-00-800-1269	51547	1-140-130-06	COVER,REAR BEARING.....F76,F77	EA	1
16	63	PAOZZ	2995-00-777-8541	51547	1-010-086-01	COVER,EXHAUST DIFFU.....F76,F77	EA	1
16	64	PAOZZ	5306-00-820-5436	51547	1-010-088-01	BOLT,MACHINE.....F76,F77	EA	
16		XBDZZ		31840	A1C7376	SEAL,REPAIR KIT 1-300-215 SEE FUNCTIONAL GROUP 50 FOR COMPONENTS.....F76,F77	KT	1

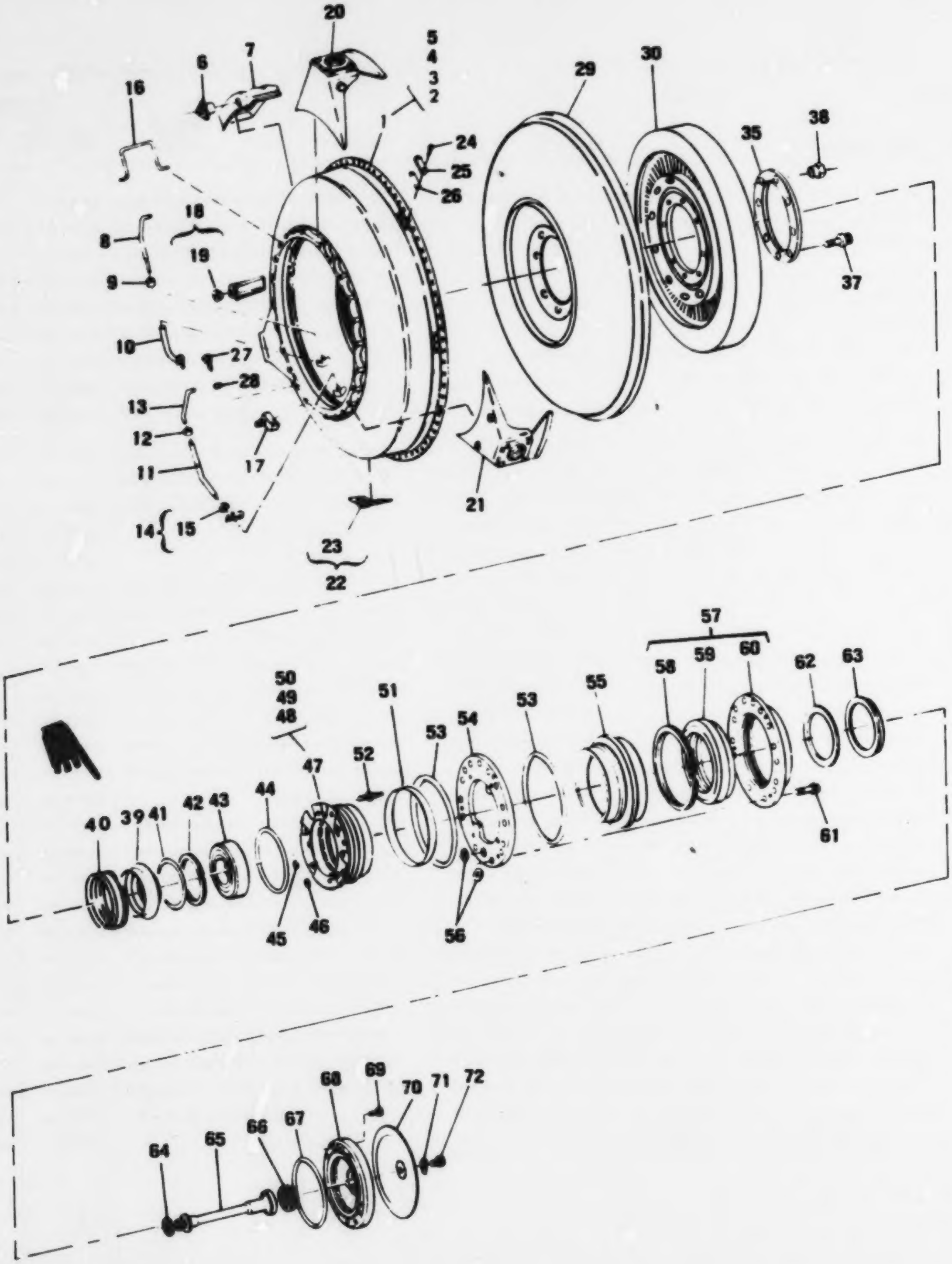

Figure 17. Diffuser Housing Assembly and Rear Bearing Housing

(1) ILLUSTRATION (a) FIG NO	(b) ITEM NO	(2) SMR CODE	(3) NATIONAL STOCK NUMBER	(4) FSCM	(5) PART NUMBER	(6) DESCRIPTION USABLE ON CODE	(7) U/M	(8) QTY INC IN UNIT
						GROUP 0403 DIFFUSER HOUSING ASSEMBLY AND REAR BEARING HOUSING(T53-L-13B)		
17	1	PADDD	2840-01-010-5826	91547	1-110-230-15	HOUSING,DIFFUSER....................................EZL	EA	1
17	2	PADZZ	2840-00-456-0906	91547	1-110-023-02	.PLATE,MOUNTING PROB................................EZL	EA	2
17				91547	1-110-230-09	.HOUSING ASSEMBLY...................................EZL	EA	1
17	3	PADZZ	2840-00-446-8909	91547	1-110-051-02	..VANE,DIFFUSER HOUSI...............................EZL	EA	28
17	4	PADZZ	2840-00-157-2919	91547	1-110-121-02	..VANE,DIFFUSER GUIDE...............................EZL	EA	36
17	5	PADZZ	2840-00-234-7226	91547	1-110-052-02	..VANE,DIFFUSER GUIDE...............................EZL	EA	8
17	6	PADZZ	2840-00-924-8636	91547	1-110-109-03	..ADAPTER,AIR BLEED.................................EZL	EA	1
17	7	PADZZ	2840-00-942-7304	91547	1-110-103-04	..MANIFOLD,AIR BLEED................................EZL	EA	1
17	8	PADZZ	2840-00-925-4156	91547	1-110-301-03	..TUBE,OIL INLET,SUPP...............................EZL	EA	1
17	9	PADZZ	5365-00-945-3902	91547	1-110-309-02	..SPACER,SLEEVE.....................................EZL	EA	1
17	10	PADZZ	2840-00-931-8269	91547	1-110-110-06	..TUBE ASSEMBLY,OIL I...............................EZL	EA	1
17	11	PADZZ	4710-00-731-5495	91547	1-110-214-01	..TUBE,BENT,METALLIC................................EZL	EA	1
17	12	PADZZ	2840-00-731-5371	91547	1-110-219-01	..SLEEVE,OIL DRAIN TU...............................EZL	EA	1
17	13	PADZZ	4710-00-727-4563	91547	1-110-218-01	..TUBE,BENT,METALLIC................................EZL	EA	1
17	14	PADDD	2840-00-234-7225	91547	1-110-610-01	..COWL,MANIFOLD,AIR D...............................EZL	EA	1
17	15	PAD[illegible]	2840-00-010-7864	91547	1-110-215-01	...FITTING,COWL,DIFFUS..............................EZL	EA	1
17	16	PADZZ	2840-00-971-6245	91547	1-110-093-03	..BRACKET,AIR DIFFUSE...............................EZL	EA	1
17	17	PADZZ	2840-00-924-7807	91547	1-110-011-04	..CONNECTOR,OIL INLET...............................EZL	EA	1
17	18	PADDD	2840-00-925-4145	91547	1-110-250-02	..PAN ASSEMBLY,AIR OU...............................EZL	EA	1
17	19	PADZZ	2840-01-011-2007	91547	1-110-089-02	..BOSS,DIFFUSER,INTER...............................EZL	EA	1
17	20	PADZZ	2840-00-925-4153	91547	1-110-130-04	..MOUNT,ENGINE HOIST................................EZL	EA	1
17	21	PADZZ	2840-00-925-4159	91547	1-110-120-03	..MOUNT,ENGINE HOIST................................EZL	EA	2
17	22	PADDD	2840-00-731-5335	91547	1-110-100-07	..MANIFOLD,OUTER,DIFF...............................EZL	EA	1
17	23	PADZZ	2840-00-922-5845	91547	1-110-216-01	..UNION,MANIFOLD....................................EZL	EA	1
17	24	PAOZZ	5305-00-939-9230	96906	MS35275-243	SCREW,MACHINE ....EZL	EA	4
17	25	PAOZZ	2840-00-792-6470	91547	1-110-073-01	PLATE,PROBE,DIFFUSE.................................EZL	EA	2
17	26	PAOZZ	5330-00-769-9908	91547	1-110-072-01	GASKET,THERMOCOUPLE.................................EZL	EA	2
17	27	PAOZZ	4730-00-888-4754	91547	1-110-114-08	BOLT,FLUID PASSAGE..................................EZL	EA	1
17	28	PAOZZ	5330-00-868-8858	91547	1-110-197-01	GASKET..EZL	EA	1
17	29	PAOZZ	2840-00-957-6580	91547	1-110-500-03	DEFLECTOR ASSEMBLY..................................EZL	EA	1
17	30	PAODD	2840-00-570-9803	91547	1-110-520-19	NOZZLE,TURBINE,TURB.................................EZL	EA	1
17	35	PAFZZ	2840-00-931-8272	91547	1-110-375-01	PLATE,SUPPORT,GAS P.................................EZL	EA	1
17	37	PAOZZ	5306-00-852-3036	96906	MS9171-10	BOLT,MACHINE..EZL	EA	6
17	38	PAOZZ	5310-00-133-1251	91547	1-110-134-01	NUT,SPECIAL...EZL	EA	2
17	39	PAFZZ	2840-00-041-3420	91547	1-100-146-04	RING,OIL BEARING,DI.................................EZL	EA	1
17	40	PAFZZ	5330-00-143-8490	91547	1-300-173	SEAL,PLAIN ENCASED..................................EZL	EA	1
17	41	PAFZZ	5365-00-066-5279	91547	1-110-211-01	SPACER,RING...EZL	EA	1

(1) ILLUSTRATION (a) FIG NO	(b) ITEM NO	(2) SMR CODE	(3) NATIONAL STOCK NUMBER	(4) FSCM	(5) PART NUMBER	(6) DESCRIPTION USABLE ON CODE	(7) U/M	(8) QTY INC IN UNIT
17	42	PAFZZ	5365-00-634-7076	91547	1-300-358-01	RING, RETAINING...EZL	EA	1
17	43	PAFFF	3110-01-015-8831	91547	1-300-584-01	BEARING,ROLLER,CYLI.....................................EZL	EA	1
17	44	PAOZZ	5330-00-753-1064	91547	1-300-249-01	SEAL,METAL,RING...EZL	EA	1
17	45	PAOZZ	5330-00-990-2853	96906	MS9202-015	GASKET..EZL	EA	1
17	46	PAOZZ	5330-00-949-9271	96906	MS9373-017	GASKET..EZL	EA	1
17	47	PAFDD	2840-00-725-5695	91547	1-110-590-02	HOUSING,ANTIFRICTIO.....................................EZL	EA	1
17	48	PAFZZ	5315-00-903-7349	96906	MS9486-24	.PIN,STRAIGHT,HEA.......................................EZL	EA	1
17	49	PADZZ	5365-00-054-3604	91547	1-110-213-01	.SPACER,SLEEVE..EZL	EA	2
17	50	PADZZ	5365-00-054-3603	91547	1-110-213-02	.SPACER,BEARING HOUS....................................EZL	EA	2
17	51	PADZZ	2840-01-011-1938	91547	1-110-175-02	.SHROUD,BEARING HOUS....................................EZL	EA	1
17	51	PADZZ	2840-01-073-3841	91547	1-110-175-03	.SHROUD,BEARING HOUS....................................EZL	EA	1
17	52	PAOZZ	5307-00-115-4775	91547	1-110-131-04	STUD,SPECIAL..EZL	EA	2
17	53	PAOZZ	5330-00-937-2547	91547	1-300-315-01	GASKET..EZL	EA	2
17	54	PAOZZ	3110-00-774-8304	91547	1-110-181-06	PLATE,RETAINING,BEA.....................................EZL	EA	1
17	55	PAOZZ	2840-00-054-3579	91547	1-100-147-02	RING,COMPRESSOR BEA.....................................EZL	EA	1
17	56	PAOZZ	5330-00-929-5816	96906	MS9371-07	GASKET..EZL	EA	2
17	57	AOOZZ		91547	1-110-600-05	SEAL AND RETAINEE A.....................................EZL	EA	1
17	58	PAOZZ	5365-00-817-9844	91547	1-300-359-01	.RING,RETAINIG..EZL	EA	1
17	59	PAOZZ	5330-00-134-5131	91547	1-300-174-03	.SEAL,PLAIN ENCASED.....................................EZL	EA	1
17	60	PAOZZ	2840-00-731-5456	91547	1-110-194-04	.RETAINER,OIL SEAL......................................EZL	EA	1
17	61	PAOZZ	5306-00-948-3243	91547	1-140-157-02	BOLT,MACHINE..EZL	EA	3
17	62	PAOZZ	5365-00-949-5495	91547	1-100-289-01	SPACER,RING 0.020 TO 0.025 IN.THK.......................EZL	EA	1
17	62	PAOZZ	5365-00-948-8032	91547	1-100-289-02	SPACER,RING 0.030 TO 0.035 IN.THK.......................EZL	EA	1
17	62	PAOZZ	5365-00-948-8031	91547	1-100-289-03	SPACER,RING 0.040 TO 0.045 IN.THK.......................EZL	EA	1
17	63	PAOZZ	2840-00-924-7985	91547	1-110-132-01	CONE,COMPRESSOR TUR.....................................EZL	EA	1
17	64	PAOZZ	5365-00-766-8651	91547	1-140-217-01	SPACER,RING 0.010 TO 0.020 IN.THK.......................EZL	EA	1
17	64	PAOZZ	5365-00-775-2510	91547	1-140-217-02	SPACER,RING 0.030 TO 0.040 IN.THK.......................EZL	EA	1
17	64	PAOZZ	5365-00-796-9776	91547	1-140-217-03	SPACER,RING 0.050 TO 0.070 IN.THK.......................EZL	EA	1
17	64	PAOZZ	5365-00-103-5870	91547	1-140-217-04	SPACER,RING 0.115 TO 0.135 IN.THK.......................EZL	EA	1
17	65	PAOZZ	2840-00-943-0054	91547	1-140-067-14	BOLT,POWER SHAFT,TU.....................................EZL	EA	1
17	66	PAOZZ	5365-00-156-8958	91547	1-140-233-02	RING,EXTERNALLY THR.....................................EZL	EA	1
17	67	PAOZZ	5330-00-253-1722	91547	1-300-462	SEAL,RETAINER...EZL	EA	1
17	68	PAOZZ	2840-00-925-7012	91547	1-140-640-03	COVER ASSEMBLY,TURB BEARING.............................EZL	EA	1
17	69	PAOZZ	5306-00-121-2305	91547	STD3061-08	BOLT,MACHINE..EZL	EA	10
17	70	PAOZZ	2840-00-945-8225	91547	1-140-182-01	COVER,EXHAUST DIFFU.....................................EZL	EA	1
17	71	PAOZZ	5310-00-089-7208	91547	1-160-635-01	WASHER,SPECIAL..EZL	EA	1
17	72	PAOZZ	5306-00-446-6471	91547	1-150-059-01	BOLT,MACHINE..EZL	EA	1
17		PAOZZ	2840-00-758-1941	91547	1-200-030-25	MAINTENANCE KIT,COM SEE FUNCTIONAL GROUP 50 FOR COMPONENTS. EZL	EA	1

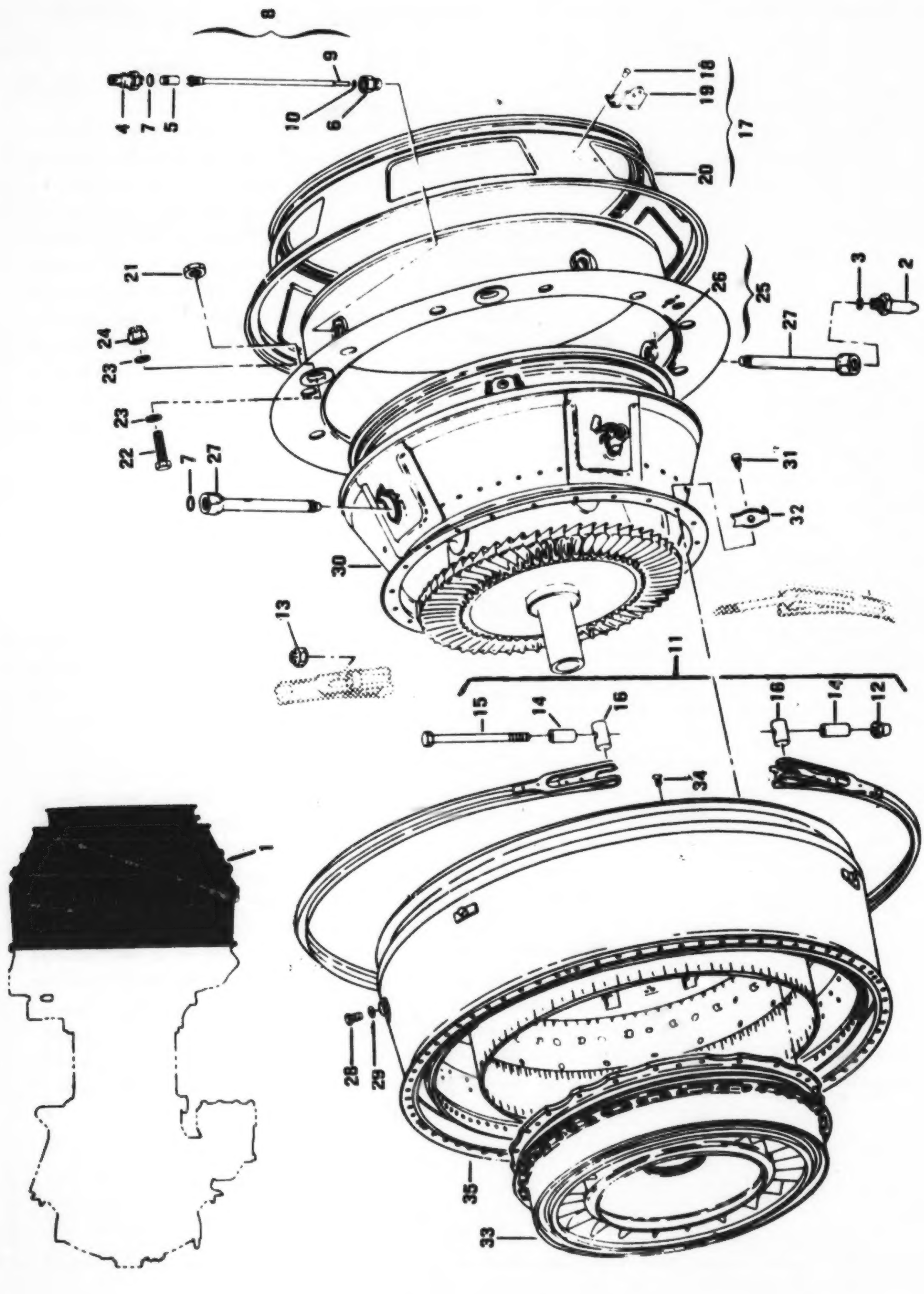

Figure 18. Combustion Turbine Assembly

(1) ILLUSTRATION (a) FIG NO	(b) ITEM NO	(2) SMR CODE	(3) NATIONAL STOCK NUMBER	(4) FSCM	(5) PART NUMBER	(6) DESCRIPTION USABLE ON CODE	(7) U/M	(8) QTY INC IN UNIT
						GROUP 0403 COMBUSTION TURBINE ASSEMBLY		
						(T53-L-11C,T53-L-11D)		
18	1	AOOOD		51547	1-130-160-08	TURBINE ASSEMBLY,CC SEE FIG.16 FOR NHA..............E76,E77	EA	1
18	2	PAFZZ	4730-00-670-7339	51547	1-150-006-01	.CONNECTOR,OIL TUBE.................................E76,E77	EA	1
18	3	PAOZZ	5330-00-811-1445	80205	NAS1595-6	.PACKING,PREFORMED..................................E76,E77	EA	1
18	4	PAOZZ	2840-00-655-5622	51547	1-150-003-02	.HOUSING,MECHANICAL.................................E76,E77	EA	1
18	5	PAOZZ	2945-00-105-3010	51547	1-150-004-03	.STRAINER,OIL,POWER.................................E76,E77	EA	1
18	6	PAOZZ	2840-00-656-8528	51547	1-150-002-01	.ADAPTER,OIL STRAINE................................E76,E77	EA	1
18	7	PAOZZ	5330-00-811-1445	80205	NAS1595-6	.PACKING,PREFORMED..................................E76,E77	EA	2
18	8	PAOFF	2840-00-656-8517	51547	1-150-040-01	.NOZZLE,LUBRICATING.................................E76,E77	EA	1
18	9	XBOZZ	5315-00-815-7464	96906	MS9105-01	..PIN,STRAIGHT,HEA..................................E76,E77	EA	1
18	10	PCOZZ	5330-00-542-1420	96906	MS29561-010	.PACKING,PREFORME...................................E76,E77	EA	1
18	11	PAOFF	2840-00-858-8552	51547	1-300-239	.COUPLING ASSEMBLY,V................................E76,E77	EA	1
18	12	PAOZZ	5310-00-158-4759	72962	21200-054	..NUT,SELFLOCKING,HEX...............................E76,E77	EA	1
18	13	PAOZZ	5310-00-219-0787	66640	6085014	..NUT,SELF-LOCKING..................................E76,E77	EA	1
18	14	PAOZZ	5365-00-856-7769	54561	214H55-82	..SPACER,SLEEVE.....................................E76,E77	EA	2
18	15	PAOZZ	5306-00-886-1453	54561	15521054-5	..BOLT,MACHINE......................................E76,E77	EA	1
18	16	PAOZZ	2840-00-821-2759	54561	20185-887	..TRUNNION..E76,E77	EA	2
18	17	PAOFF	2840-00-753-2068	51547	1-150-100-01	.CONE,SUPPORT,DIFFUS................................E76,E77	EA	1
18	18	PAFZZ	5320-00-815-5850	96906	MS20613-3C3	..RIVET,SOLID.......................................E76,E77	CZ	4
18	19	PBFZZ	2840-00-753-2070	51547	1-150-042-02	..BRACKET,PRIMER MANI...............................E76,E77	EA	1
18	20	XAOZZ		51547	1-150-050-05	..CONE,EXHAUST,TURBIN...............................E76,E77	EA	1
18	21	PAOZZ	5310-00-815-5368	51547	1-150-044-02	.NUT,PLAIN,HEXAGON..................................E76,E77	EA	11
18	22	PAOZZ	5306-00-881-8735	88044	AN104906	.BOLT,MACHINE.......................................E76,E77	EA	3
18	23	PAOZZ	5310-00-167-0837	88044	AN960-616L	.WASHER,FLAT..E76,E77	EA	6
18	24	PAOZZ	5310-00-857-4548	96906	MS21045L6	.NUT,SELF-LOCKING...................................E76,E77	EA	3
18	25	PAOZZ	2840-00-778-2271	51547	1-150-033-06	.SHIELD,HEAT,TURBINE................................E76,E77	EA	1
18	26	PAOZZ	5310-00-484-0573	51547	1-150-031-02	..WASHER,KEY..E76,E77	EA	2
18	27	PAOZZ	2840-00-862-4862	51547	1-150-005-02	.TUBE,POWER TURBINE.................................E76,E77	EA	2
18	28	PAOZZ	5365-00-670-4342	51547	1-130-003-01	.PLUG,MACHINE THREAD................................E76,E77	EA	1
18	29	PAOZZ	5310-00-650-6448	51547	STD3027C6	.WASHER,FLAT..E76,E77	EA	1
18	30	AOOOO		51547	1-150-350-01	.SUPPORT ASSY,TURBIN SEE FIG.24 FOR BREAKDOWN........E76,E77	EA	1
18	31	PAOZZ	5306-00-935-2385	77445	456168	.BOLT,MACHINE.......................................E76,E77	EA	22
18	32	PAOZZ	5310-00-651-5255	51547	STD3023K2	.WASHER,KEY...E76,E77	EA	22
18	33	AFOOD		51547	1-140-270-11	.NOZZLE,TURBINE,TURB ASSEMBLY,POWER TURBINE SEE FIG.22 FOR BREAKDOWN..............................E76,E77	EA	1
18	34	PAOZZ		51547	STD3053-47	.SCREW,MACHINE......................................E76,E77	EA	3
18	35	AFOOO		51547	1-130-260-03	.HOUSING ASSY,COMBUS SEE FIG.20 FOR BREAKDOWN........E76,E77	EA	1
18		PAFZZ	2840-00-758-1541	51547	1-230-030-25	MAINTENANCE KIT,COM SEE FUNCTIONAL GROUP 50 FOR COMPONENTS.. E76,E77	EA	1

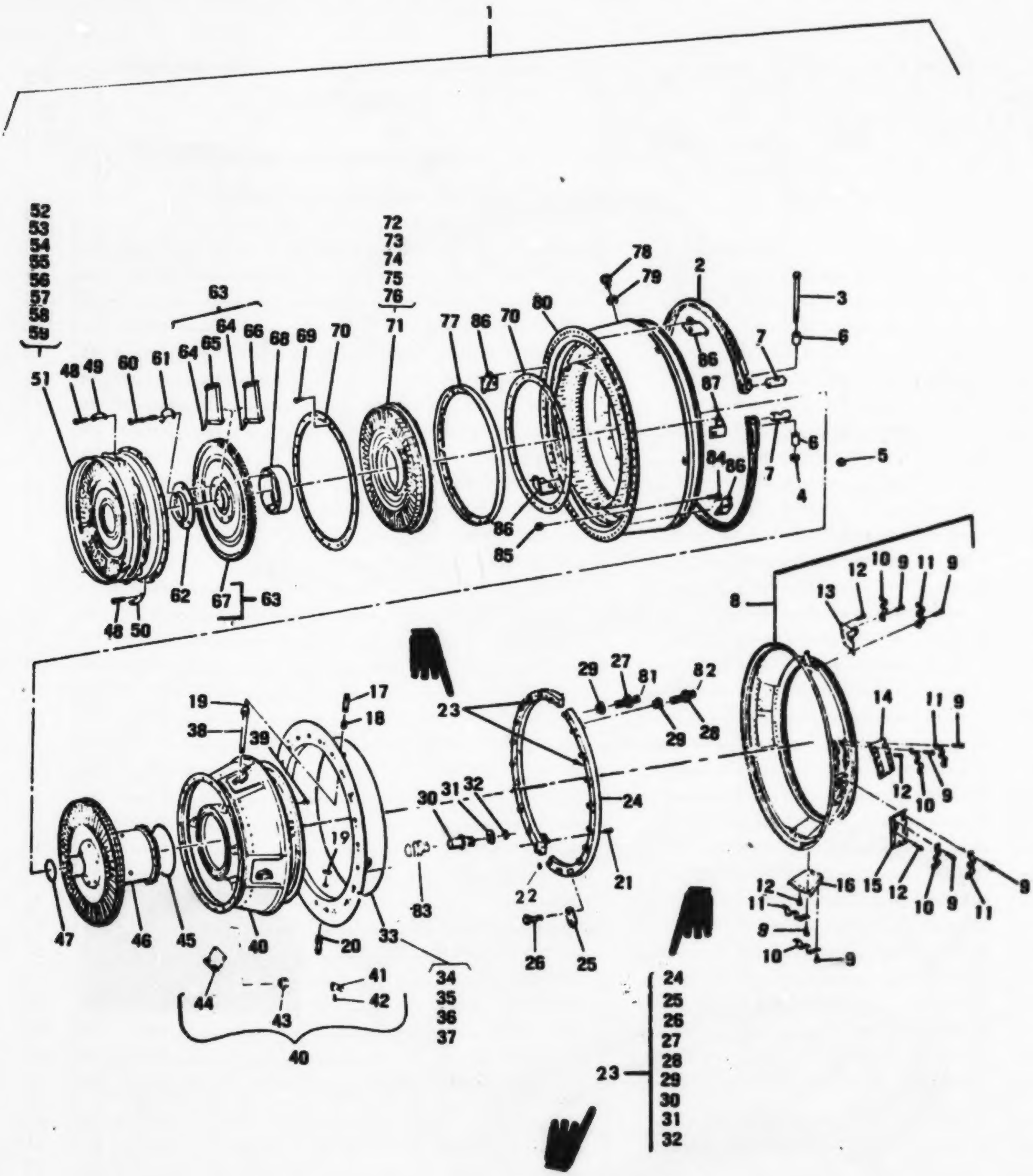

Figure 19. Turbine Assembly, Combustion

(1) ILLUSTRATION (a) FIG NO	(b) ITEM NO	(2) SMR CODE	(3) NATIONAL STOCK NUMBER	(4) FSCM	(5) PART NUMBER	(6) DESCRIPTION USABLE ON CODE	(7) U/M	(8) QTY INC IN UNIT
						GROUP 0403 TURBINE ASSEMBLY,COMBUSTION (T53-L-13B)		
15	1	AOOOD		51547	1-130-033-08	TURBINE COMBUSTOR A.......FFX	EA	1
15	2	PAOFF	2840-00-858-8552	51547	1-330-739	.COUPLING ASSEMBLY,V.......FFX	EA	1
15	3	PAOZZ	5306-00-888-1453	54581	35521C54-5	..BOLT,MACHINE.......FFX	EA	1
15	4	PAOZZ	5310-00-158-4795	72582	71730-054	..NUT,SELFLOCKINGEXTE.......FFX	EA	1
15	5	PAOZZ	5310-00-239-0787	66640	E085E14	..NUT,SELF-LOCKING.......FFX	EA	2
15	6	PAOZZ	5365-00-850-7685	54581	214M55-92	..SPACER,SLEEVE.......FFX	EA	2
15	7	PAOZZ	2840-00-821-2359	54581	2C185-887	..TRUNNION.......FFX	EA	2
15	8	PAOOO	2840-00-943-2411	51547	1-150-263-02	.CASE,EXHAUST,TURBIN.......FFX	EA	1
15	9	PAOZZ	5305-00-055-2357	96906	MS24673-9	..SCREW,CAP,SOCKET HE.......FFX	EA	14
15	10	PAOZZ	2840-00-525-3332	51547	1-150-115-01	..PLATE,RETAINER,DIFF.......FFX	EA	4
15	11	PAOZZ	2840-00-544-2516	51547	1-150-122-01	..PLATE,RETAINER,DIFF.......FFX	EA	4
15	12	PAOZZ	5315-00-957-3984	51547	1-150-173-02	..PIN,STRAIGHT,HEADLE.......FFX	EA	10
15	13	PAOZZ	2840-00-525-8825	51547	1-150-280-06	..SUPPORT ASSEMBLY,CI.......FFX	EA	1
15	14	PAOZZ	2840-00-525-5586	51547	1-150-280-05	..SUPPORT ASSEMBLY,CI.......FFX	EA	2
15	15	PAOZZ	2840-00-525-8826	51547	1-150-280-07	..SUPPORT ASSEMBLY,CI.......FFX	EA	4
15	16	PAOZZ	2840-00-525-5567	51547	1-150-280-03	..SUPPORT ASSEMBLY,CI.......FFX	EA	4
15	17	PAOZZ	2840-00-542-3033	51547	1-150-108-01	.ADAPTER,OIL STRAINE.......FFX	EA	1
15	18	PAOZZ	2840-00-105-2011	51547	1-150-107-03	.STRAINER,OIL,SCREEN.......FFX	EA	1
15	19	PAOZZ	5330-00-811-1445	80205	AAS1555-6	.PACKING,PREFORMED.......FFX	EA	1
15	20	PAOZZ	4730-00-870-7235	51547	1-150-006-01	.CONNECTOR,OIL TUBE.......FFX	EA	1
15	21	PAOZZ	5305-00-935-7521	80205	AAS1351C4H14	.SCREW,CAP,SOCKET HE.......FFX	EA	22
15	22	PAOZZ	5330-00-535-0245	51547	1-330-151	.SEAL,PLAIN.......FFX	EA	22
15	23	PAOOO	2840-00-580-0134	51547	1-130-730-02	.MANIFOLD ASSEMBLY,C.......FFX	EA	2
15	24	PAOZZ	2840-00-545-8219	51547	1-130-720-02	..MANIFOLD ASSEMBLY,F.......FFX	EA	1
15	25	PAFZZ	5330-00-878-5939	51547	1-130-296-03	..GASKET.......FFX	EA	4
15	26	PAOZZ		88044	AN507C836R5	..SCREW,MACHINE.......FFX	EA	2
15	27	PAOZZ	2915-00-564-2273	51547	1-330-361	..FILTER ASSEMBLY,NOZ.......FFX	EA	2
15	28	PAOZZ	2915-00-555-8282	51547	1-330-362	..FILTER ASSEMBLY,VAL.......FFX	EA	2
15	29	PAOZZ	5330-00-828-8059	51547	1-300-371	..PACKING,PREFORMED.......FFX	EA	4
15	30	PAOZZ	2915-00-544-3255	51547	1-330-347	..NOZZLE,FUEL INJECTI.......FFX	EA	11
15	31	PAOZZ	5330-00-820-8040	51547	1-300-365	..PACKING,PREFORMED.......FFX	EA	22
15	32	PAOZZ	5330-00-512-4103	51547	1-330-366	..SEAL.......FFX	EA	11
15	33	PAOOO	2840-00-542-4230	51547	1-150-250-02	.SHIELD,HEAT,TURBINE.......FFX	EA	1
15	34	PAOZZ	2840-00-421-4453	51547	1-150-390-01	..PLATE ASSY,FIRESHIE.......FFX	EA	4
15	35	PAOZZ	5320-00-125-5306	51547	2-300-322-01	..RIVET,BLIND.......FFX	EA	4
15	36	PAOZZ	2840-00-421-4151	51547	1-150-137-01	..RETAINER,LOCKING TA.......FFX	EA	2
15	37	PAOZZ	2840-00-421-4152	51547	1-150-138-01	..RETAINER,LOCKING TA.......FFX	EA	2
15	38	PAOZZ	2840-00-862-4462	51547	1-150-009-02	.TUBE,POWER TURBINE.......FFX	EA	2

(1) ILLUSTRATION (a) FIG NO	(b) ITEM NO	(2) SMR CODE	(3) NATIONAL STOCK NUMBER	(4) FSCM	(5) PART NUMBER	(6) DESCRIPTION USABLE ON CODE	(7) U/M	(8) QTY INC IN UNIT
19	39	PAOZZ	5305-00-071-1320	96906	MS51960-63	.SCREW,MACHINE..EZL	EA	2
19	40	PAOOO	2840-00-808-3885	51547	1-150-240-03	.DIFFUSER,EXHAUST..EZL	EA	1
19	41	PAFZZ	5315-00-013-8505	51547	1-140-023-06	..PIN,STRAIGHT,HEADLE..EZL	EA	6
19	42	PAFZZ	5307-00-091-9220	51547	1-150-007-02	..STUD,CONTINUOUS THR..EZL	EA	6
19	43	PAFZZ	5310-00-832-8289	51547	1-330-086-01	..NUT,SELF-LOCKING,CL..EZL	EA	22
19	44	PAOZZ	5340-00-036-9204	51547	1-150-086-01	.BRACKET,ANGLE..EZL	EA	2
19	45	PAOZZ	5330-00-253-1322	51547	1-300-462	.SEAL,RETAINER..EZL	EA	1
19	46	ADODD		91547	1-140-530-14	.ROTOR AND HOUSING A SEE FIG.25 FOR BREAKDOWN...........EZL	EA	1
19	47	PAOZZ	5330-00-832-8448	96906	MS9205-013	.GASKET..EZL	EA	1
19	48	PAOZZ	5305-00-944-4272	51547	1-130-245-01	.SCREW,CAP,SOCKET HE..EZL	EA	22
19	49	PAOZZ	2840-00-945-5819	51547	1-190-019-02	.PLATE,LOCKING..EZL	EA	1
19	50	PAOZZ	2840-00-944-0520	51547	1-190-019-03	.LOCKING PLATE,ALT A..EZL	EA	10
19	51	PAOOO	2840-00-944-7256	51547	1-190-000-09	.NOZZLE,TURBINE,TURB..EZL	EA	1
19	51	XAFOO		51547	1-190-050-06	.NOZZLE,TURBINE,TURB..EZL	EA	1
19	51	PAFOO	2840-01-089-4251	51547	1-190-050-07	.NOZZLE,TURBINE,TURB..EZL	EA	1
19	52	PAOZZ	2840-00-108-2360	51547	1-190-015-02	..FLANGE,TURBINE NOZZ..EZL	EA	1
19	53	PAOZZ	2840-00-108-0067	51547	1-190-014-02	..FLANGE,NOZZLE SEAL..EZL	EA	1
19	54	PAOZZ	2840-00-108-0072	51547	1-190-013-02	..SEAL RING,FIRST STA..EZL	EA	1
19	55	PAOZZ	2840-00-108-2356	51547	1-190-004-05	..VANE,TURBINE NOZZLE..EZL	EA	65
19	56	PAOZZ	2840-00-437-2433	51547	1-190-027-01	..RING,TURBINE NOZZLE..EZL	EA	1
19	57	PAOZZ	2840-00-437-2438	51547	1-190-028-01	..SEAL RING,TURBINE N..EZL	EA	1
19	58	PAOZZ	2840-00-437-2430	51547	1-190-029-01	..RING,TURBINE NOZZLE..EZL	EA	1
19	59	PAOZZ	2840-00-437-2431	51547	1-190-031-01	..SEAL RING,TURBINE N..EZL	EA	1
19		PAFZZ	2840-01-089-4107	51547	1-190-037-01	..PLATE,COVER..EZL	EA	12
19		PAFZZ		88044	AN123355	..RIVET,SOLID..EZL	EA	12
19		PAFZZ	5306-00-775-6235	96906	MS9565-05	..BOLT,MACHINE..EZL	EA	12
19	60	PAFZZ	5306-01-010-1053	51547	1-140-168-03	.BOLT,EXTERNALLY REL..EZL	EA	6
19	61	PAOZZ	2840-00-943-5836	51547	1-140-142-02	.PLATE,LOCKING,POWER..EZL	EA	3
19	62	PAOZZ	2840-00-942-7053	51547	1-190-016-01	.SEALING FLANGE,FIRS..EZL	EA	1
19	63	PAFOO	2840-01-010-5545	51547	1-190-010-03	.TURBINE ROTOR,TURBI..EZL	EA	1
19	64	PAOZZ	5315-00-150-3435	51547	1-140-285-01	..PIN,STRAIGHT,HEADLE..EZL	EA	66
19	65	PAOZZ	2840-01-009-3716	51547	1-190-007-07	..BLADE,TURBIN ROTOR..EZL	EA	33
19	66	PAOZZ	2840-01-008-7887	51547	1-190-008-04	..BLADE,TURBINE ROTOR..EZL	EA	33
19	67	PAOZZ	2840-00-925-5560	51547	1-190-009-05	..DISK,TURBINE,TURBIN..EZL	EA	1
19	68	PAOZZ	2840-00-944-2344	51547	1-140-169-03	.SPACER,POWER TURBIN..EZL	EA	1
19	69	PAOZZ	5315-00-944-1097	51547	1-190-021-01	.PIN,STRAIGHT,HEA..EZL	EA	3
19	69	PAOZZ	5315-00-854-2549	51547	1-190-021-02	.PIN,STRAIGHT,HEADED..EZL	EA	1
19	69	PAOZZ	5315-00-854-2550	51547	1-190-021-03	.PIN,STRAIGHT,HEA..EZL	EA	1
19	69	PAOZZ	5315-00-854-2548	51547	1-190-021-04	.PIN,STRAIGHT,HEA..EZL	EA	1
19	70	PAOZZ	5365-00-947-3184	51547	1-140-276-01	.SPACER,PLATE 0.022 TO 0.028 IN.THK..EZL	EA	1

(1) ILLUSTRATION		(2)	(3)	(4)	(5)	(6) DESCRIPTION	(7)	(8)
(a) FIG NO	(b) ITEM NO	SMR CODE	NATIONAL STOCK NUMBER	FSCM	PART NUMBER	USABLE ON CODE	U/M	QTY INC IN UNIT
19	69	PAOZZ	5365-00-547-3185	51547	1-14C-276-02	.SPACER,PLATE 0.029 TO 0.035 IN.THK......................FZL	EA	1
19	70	PAOZZ	5365-00-547-3187	51547	1-14C-276-03	.SPACER,PLATE 0.036 TO 0.044 IN.THK......................FZL	EA	1
19	71	PAOOO	2840-00-543-2382	51547	1-14C-470-05	.NOZZLE,TURBINE,TURB......................FZL	EA	1
19	72	PAOZZ	2840-00-462-8883	51547	1-14C-102-02	..SEAL,TURBINE NOZZLE......................FZL	EA	2
19	73	PAOZZ	2840-00-462-8885	51547	1-14C-176-02	..SUPPORT,TURBINE NOZ......................FZL	EA	1
19	74	PAOZZ	2840-00-234-6252	51547	1-14C-258-04	..VANE,TURBINE NOZZLE......................FZL	EA	67
19	75	PAOZZ	2840-00-437-2840	51547	1-14C-197-01	..SEAL RING,TURBINE N......................FZL	EA	1
19	76	PAOZZ	2840-00-437-2888	51547	1-14C-198-01	..SEAL RING,TURBINE N......................FZL	EA	1
19	77	PAOZZ	2840-00-525-5707	51547	1-14C-275-01	.MOUNT,RING,NOZZLE......................FZL	EA	1
19	78	PAOZZ	4730-00-007-2122	51547	1-13C-268-01	.BOLT......................FZL	EA	1
19	79	PAOZZ	5330-00-235-0237	51547	5103027C5	.GASKET......................FZL	EA	2
19	80	AOOOO		51547	1-14C-620-05	.CHAMBER ASSEMBLY,CO SEE FIG.21 FOR BREAKDOWN........FZL	EA	1
19	81	PAOZZ	4730-00-535-8452	96906	MS5314-04	.CAP,TUBE......................FZL	EA	2
19	82	PAOZZ	4730-00-571-6670	88044	AN529A3C	.CAP,TUBE......................FZL	EA	2
19	83	PAOZZ	4730-00-533-0524	96906	MS5314-03	.CAP,TUBE......................FZL	EA	2
19	84	PAOZZ	5306-00-248-5870	96906	MS9518-09	.BOLT,MACHINE......................FZL	EA	22
19	85	PAOZZ	5310-00-807-1467	96906	MS21042-3	.NUT,SELF-LOCKING,EX......................FZL	EA	22
19	86	PAOZZ	2840-00-656-8550	51547	1-16C-136-01	.BRACKET,CLAMP......................FZL	EA	4
19	87	PAOZZ	2840-00-656-8549	51547	1-16C-135-01	.BRACKET,CLAMP......................FZL	EA	1

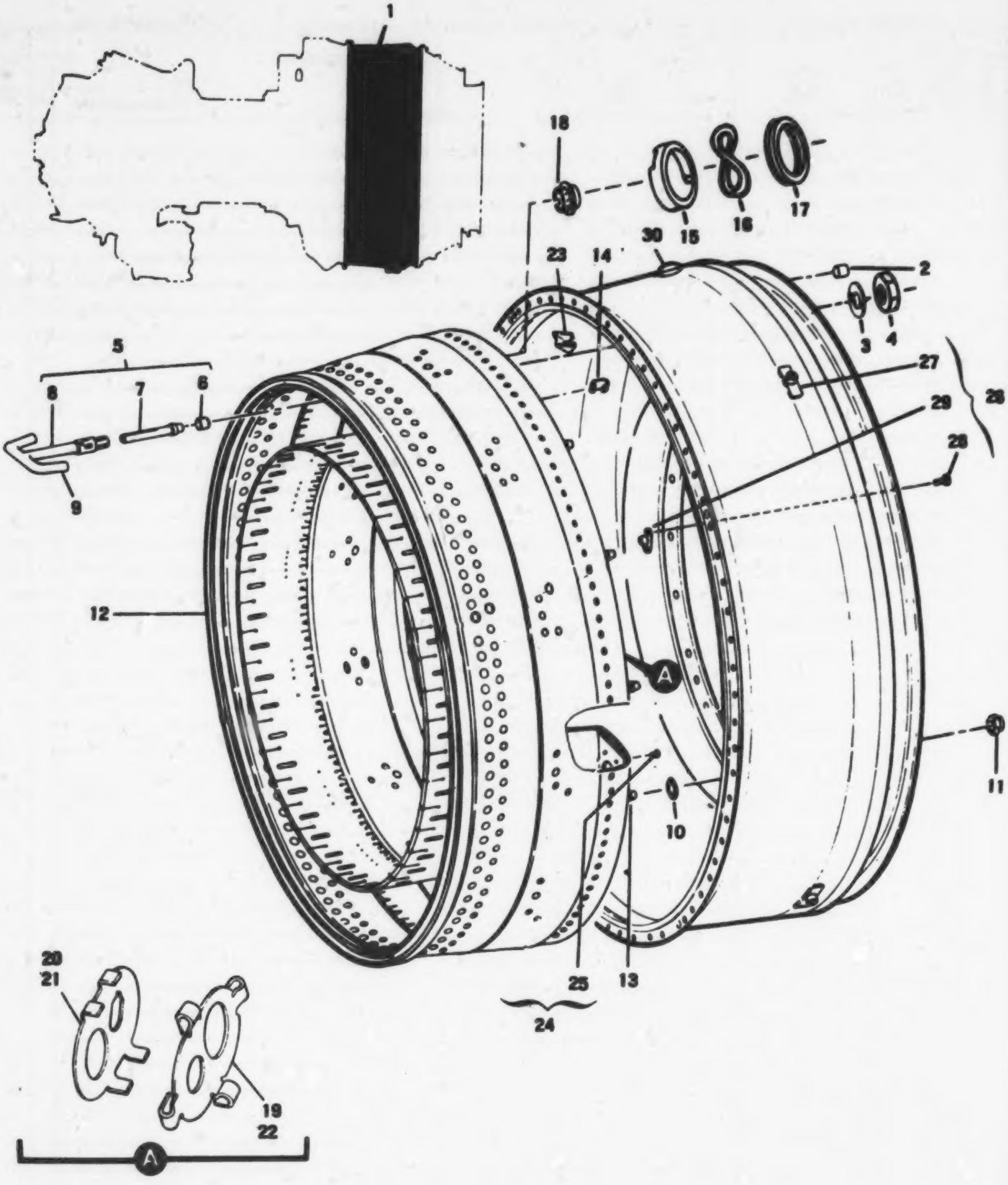

Figure 20. Combustion Chamber Assembly

(1) ILLUSTRATION		(2)	(3)	(4)	(5)	(6) DESCRIPTION	(7)	(8)
(a) FIG NO.	(b) ITEM NO.	SMR CODE	NATIONAL STOCK NUMBER	FSCM	PART NUMBER	USABLE ON CODE	U/M	QTY INC IN UNIT
						GROUP 0403 COMBUSTION CHAMBER ASSEMBLY		
						(T53-L-11C,T53-L-11D)		
20	1	AFDDD		51547	1-130-263-03	HOUSING ASSY,COMBUS SEE FIG.18 FOR NHA..............F76,F77	EA	1
20	2	PAOZZ	5315-00-543-3033	96906	MS171522	.PIN,SPRING..............F76,F77	EA	1
20	3	PAOZZ	5310-00-654-8530	51547	1-130-031-02	.NUT,PLAIN,ROUND..............F76,F77	EA	11
20	4	PAOZZ	5310-00-615-5368	51547	1-150-344-02	.NUT,PLAIN,HEXAGON..............F76,F77	EA	11
20	5	PAODD	2915-00-074-3365	51547	1-130-593-02	.VAPORIZER ASSEMBLY,..............F76,F77	EA	11
20	6	PAFZZ	3120-00-072-4876	51547	1-130-176-01	..BUSHING,SLEEVE..............F76,F77	EA	11
20	7	PAFZZ	2915-00-576-5307	51547	1-130-112-01	..FUEL DIVIDER,VAPORI..............F76,F77	EA	11
20	8	XAFZZ		51547	1-130-583-02	..VAPORIZER ASSEMBLY..............F76,F77	EA	11
20	9	PAOZZ	2915-00-118-5488	51547	1-130-141-01	...TUBE,VAPORIZER EXIT..............F76,F77	EA	2
20	10	PAOZZ	5310-00-902-4058	51547	1-130-219-01	.WASHER,FLAT..............F76,F77	EA	3
20	11	PAOZZ	5310-00-059-5265	96906	MS21046C4	.NUT,SELF-LOCKING..............F76,F77	EA	11
20	12	PAODD	2840-00-950-6665	51547	1-130-600-03	.CHAMBER,COMBUSTION,..............F76,F77	EA	1
20	13	PAOZZ	5306-00-908-0373	51547	1-130-096-02	..BOLT,LINER MOUNTING..............F76,F77	EA	8
20	13	PAOZZ	5306-00-908-0374	51547	1-130-096-03	..BOLT,LINER MOUNTING..............F76,F77	EA	3
20	14	PAFZZ	2840-00-576-5304	51547	1-130-091-01	..PLATE,STUD RETAINER..............F76,F77	EA	11
20	15	PAOZZ	2840-00-950-6650	51547	1-130-097-03	..SPACER,SEAL,VAPORIZ..............F76,F77	EA	11
20	16	PAOZZ	5310-00-511-5443	51547	1-130-219-01	..WASHER,SPRING TENSI..............F76,F77	EA	11
20	17	PAOZZ	5365-00-517-3835	51547	1-300-373-01	..RING,RETAINING..............F76,F77	EA	11
20	18	PAOZZ	2840-00-950-6660	51547	1-130-094-05	..SEAL,VAPORIZER,COMB..............F76,F77	EA	11
20	19	PAOZZ	2840-00-064-5428	51547	1-130-121-02	..PLATE,SEAL..............F76,F77	EA	1
20	20	PAOZZ	2840-00-064-5427	51547	1-130-119-02	..PLATE,SEAL..............F76,F77	EA	1
20	21	PAOZZ	2840-00-064-5425	51547	1-130-123-02	..PLATE,SEAL..............F76,F77	EA	1
20	22	PAOZZ	2840-00-064-5430	51547	1-130-136-01	..PLATE,SEAL..............F76,F77	EA	1
20	23	PAOZZ	2840-00-758-1542	51547	1-130-098-01	..BRACKET,LINER MOUNT..............F76,F77	EA	11
20	24	PAOZZ	2840-00-577-1043	51547	1-130-380-01	..PLATE ASSEMBLY,COMB..............F76,F77	EA	1
20	24	XAODD		51547	1-130-151-01	..LINER,END,COMBUSTIO..............F76,F77	EA	1
20	25	PAFZZ	5320-00-288-4356	88044	AN123619	...RIVET,SOLID..............F76,F77	LP	84
20	26	PAFDD	2840-00-960-5465	51547	1-130-020-08	.CASE,COMBUSTION CHA..............F76,F77	EA	1
20	27	PAFZZ	5310-00-517-6046	51547	1-300-085-01	..NUT,PLAIN,PLATE..............F76,F77	EA	1
20	28	PAFZZ	5320-00-288-4353	88044	AN125439	..RIVET,SOLID..............F76,F77	LP	22
20	29	PAFZZ	2840-00-835-6777	51547	1-130-233-02	..SUPPORT ASSEMBLY,LI..............F76,F77	EA	11
20	30	PAOZZ	2840-00-168-2455	51547	1-130-109-02	..ADAPTER,VAPORIZOR..............F76,F77	EA	11

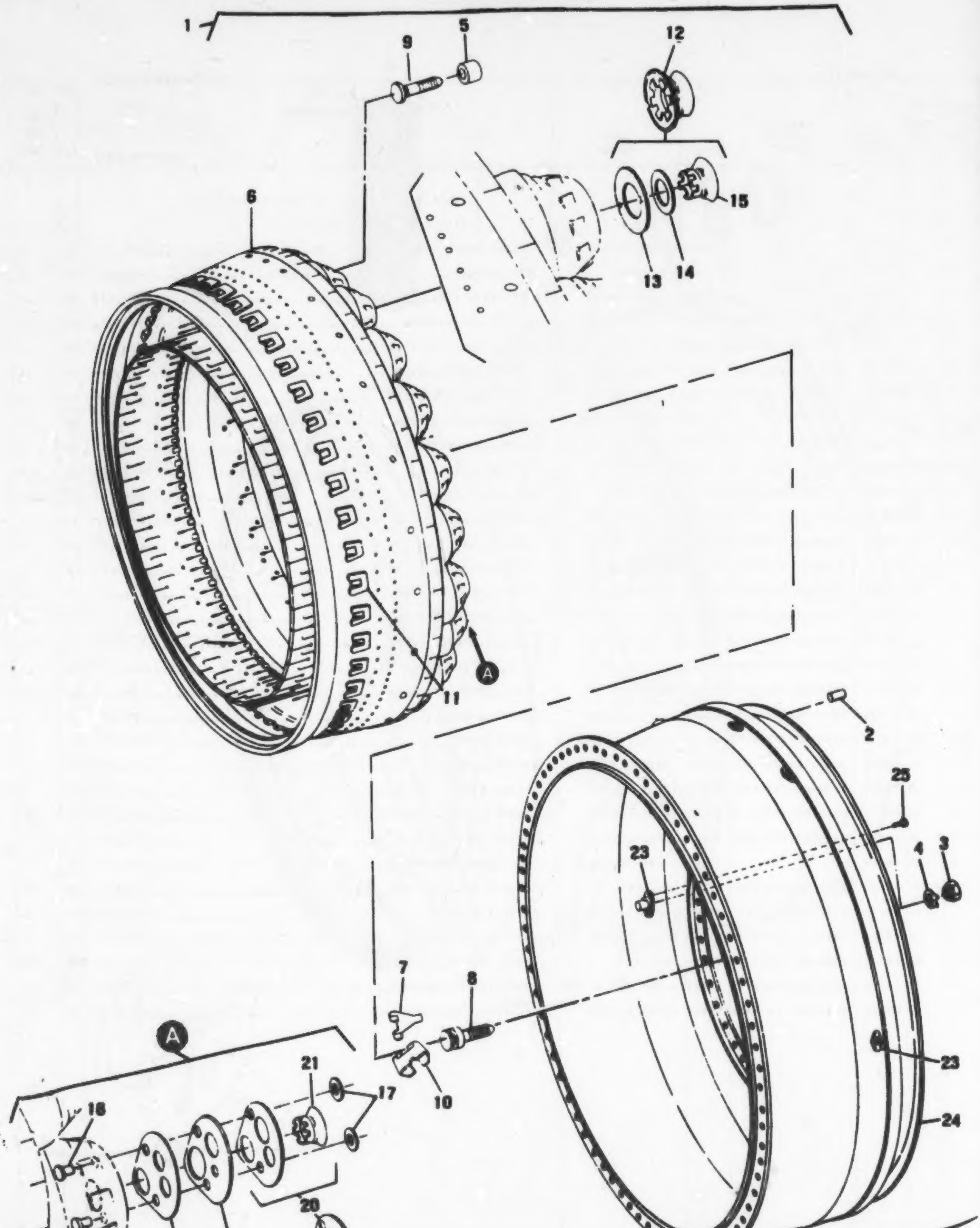

Figure 21. Combustion Chamber Assembly

(1) ILLUSTRATION (a) FIG NO	(b) ITEM NO	(2) SMR CODE	(3) NATIONAL STOCK NUMBER	(4) FSCM	(5) PART NUMBER	(6) DESCRIPTION USABLE ON CODE	(7) U/M	(8) QTY INC IN UNIT
						GROUP 0403 COMBUSTION CHAMBER ASSEMBLY		
						(T53-L-13B)		
21	1	AOOOD		51547	1-130-620-05	CHAMBER ASSEMBLY,CC SEE FIG.19 FOR NHA..................F7L	EA	1
21	2	PAOZZ	5315-00-543-2033	96906	MS171522	.PIN,SPRING..F7L	EA	1
21	3	PAOZZ	5310-00-224-1421	96906	MS9356-11	.NUT,PLAIN,HEXAGON.......................................F7L	EA	6
21	4	PAOZZ	5310-00-545-5350	51547	1-130-235-01	.WASHER,KEY..F7L	EA	6
21	5	PAOZZ	5365-00-519-0046	51547	1-130-218-03	.SPACER,SLEEVE...F7L	EA	3
21	6	PAOOD	2840-00-543-2379	51547	1-130-780-01	.CHAMBER,COMBUSTION,.....................................F7L	EA	1
21	7	PAOZZ	2840-00-544-1808	51547	1-130-257-01	..PLATE,STUD RETAINER....................................F7L	EA	6
21	8	PAOZZ	5315-00-547-3250	51547	1-130-256-01	..PIN,SHOULDER,HEADLE....................................F7L	EA	3
21	9	PAOZZ	5325-00-550-2664	51547	1-130-256-02	..STUD,LINER MOUNTING....................................F7L	EA	3
21	10	PAOZZ	2840-00-554-4700	51547	1-130-255-01	..BRACKET,LINER MOUNT....................................F7L	EA	6
21	11	PAOZZ	2840-00-474-5712	51547	1-130-248-02	..DEFLECTOR,COMBUSTIO....................................F7L	EA	44
21	12	PAOZZ	2840-00-855-6162	51547	1-130-790-01	..SEAL AND GUIDE ASSY....................................F7L	EA	18
21	13	PAOZZ	2840-00-554-4477	51547	1-130-266-01	...RETAINER,SEAL GUIDE...................................F7L	EA	1
21	14	PAOZZ	5310-00-531-4785	51547	1-130-259-02	...WASHER,FLAT...F7L	EA	1
21	15	XAOZZ		51547	1-130-258-02	...GUIDE,ATOMIZER ASSE...................................F7L	EA	1
21	16	PAOZZ	5320-00-555-5357	51547	1-130-264-01	..RIVET,TUBULAR..F7L	EA	8
21	17	PAOZZ	5310-00-503-4633	51547	1-130-265-01	..WASHER,FLAT..F7L	EA	8
21	18	PAOZZ	5330-00-554-4472	51547	1-130-262-02	..GASKET...F7L	EA	4
21	19	PAOZZ	2925-00-550-6624	51547	1-130-261-01	..GASKET,IGNITER PLU.....................................F7L	EA	4
21	20	PAOZZ	2840-00-554-4480	51547	1-130-800-01	..SEAL GUIDE,ATOMIZER ASSEMBLY...........................F7L	EA	4
21	21	XAOZZ		51547	1-130-258-04	...GUIDE,ATOMIZER ASSE...................................F7L	EA	1
21	22	PAOOD	2840-00-543-2409	51547	1-130-610-05	.CASE,COMBUSTION CHA.....................................F7L	EA	1
21	23	PAOZZ	5310-00-517-6046	51547	1-300-085-01	..NUT,PLAIN,PLATE..F7L	EA	6
21	24	XAFZZ		51547	1-130-015-03	..FLANGE,REAR,OUTER......................................F7L	EA	1
21	25	PAFZZ	5320-00-286-4753	88044	AN125439	..RIVET,SOLID..F7L	LB	12
21	26	PAFZZ	2840-00-012-3264	51547	1-130-710-01	..SUPPORT, LINER, COM....................................F7L	EA	6

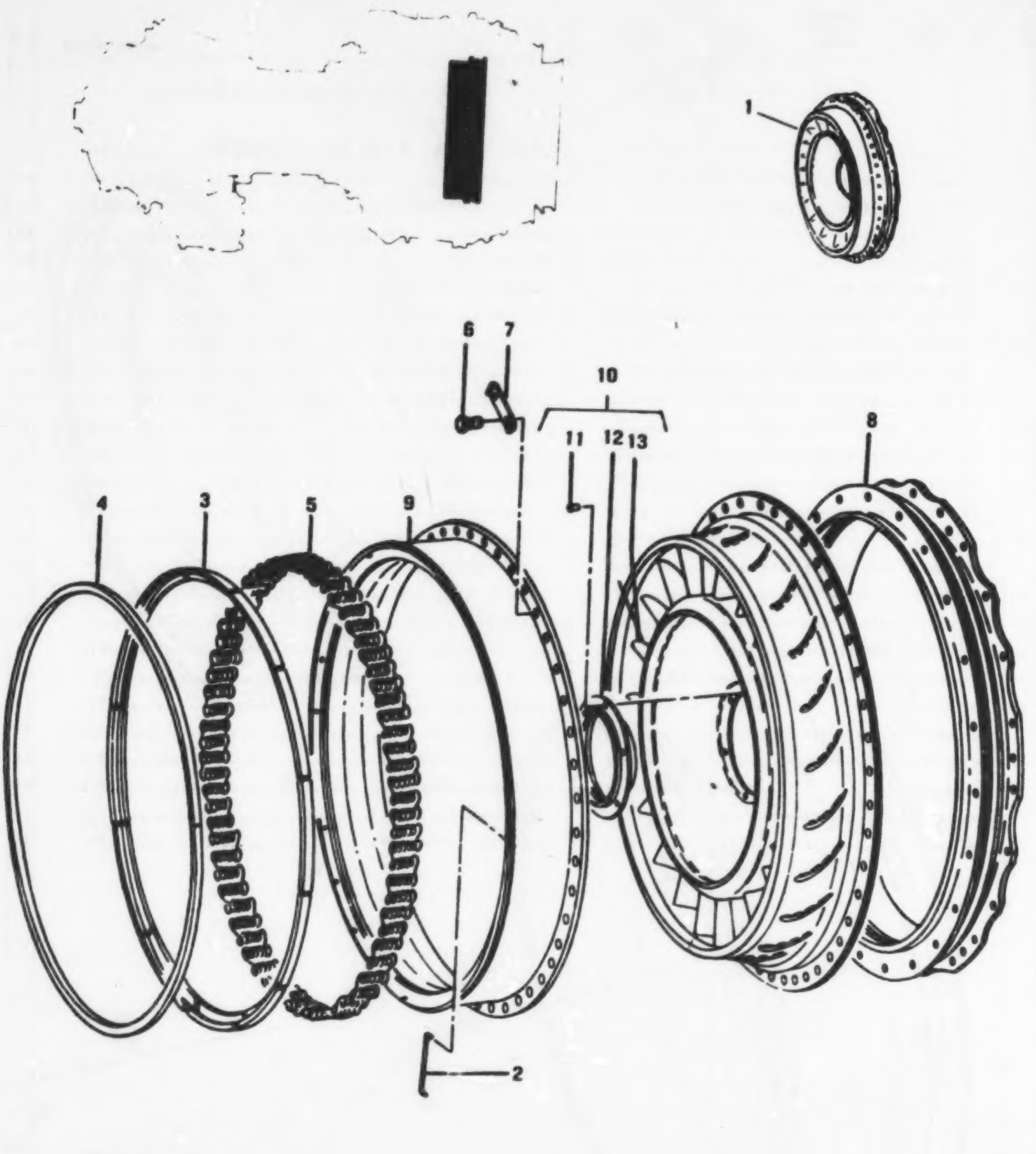

Figure 22. Turbine Nozzle and Cylinder Assembly

(1) ILLUSTRATION (a) FIG NO.	(b) ITEM NO.	(2) SMR CODE	(3) NATIONAL STOCK NUMBER	(4) FSCM	(5) PART NUMBER	(6) DESCRIPTION USABLE ON CODE	(7) U/M	(8) QTY INC IN UNIT
						GROUP 0434 POWER TURBINE		
						TURBINE NOZZLE AND CYLINDER ASSEMBLY		
						(T53-L-11C,T53-L-11D)		
22	1	AFOCD		51547	1-140-270-11	NOZZLE,TURBINE,TURB SEE FIG.18 FOR NHA................F76,F77	EA	1
22	2	PAOZZ	2840-00-778-2274	51547	1-140-225-01	.LOCKWIRE,SECOND TUR.................................F76,F77	EA	12
22	3	PAOZZ	2840-00-736-3556	51547	1-140-222-02	.SEGMENT,TURBINE SEA.................................F76,F77	EA	12
22	4	MFOZZ		51547	2-300-123-01	.PACKING MATERIAL....................................F76,F77	EA	1
22	5	PAOZZ	2840-00-766-6652	51547	1-140-223-01	.SPRING,TURBINE SEAL.................................F76,F77	EA	1
22	6	PAOZZ	5306-00-857-5278	51547	1-140-244-01	.BOLT,MACHINE..F76,F77	EA	44
22	7	PAOZZ	2840-00-778-2272	51547	1-140-029-02	.LOCKING PLATE,NUT A.................................F76,F77	EA	22
22	8	PAOZZ	2840-00-604-1453	51547	1-140-056-07	.CYLINDER,POWER TURB.................................F76,F77	EA	1
22	9	PAOZZ	2840-00-019-8009	51547	1-140-250-02	.RETAINER ASSEMBLY,T.................................F76,F77	EA	1
22	10	PAOCD	2840-00-085-3880	51547	1-140-420-04	.NOZZLE,TURBINE,TURB.................................F76,F77	EA	1
22	11	PAOZZ	5320-00-721-8572	96906	MS20613-3C4	..RIVET,SOLID..F76,F77	LB	6
22	12	PAOZZ	5365-00-554-5475	51547	1-140-248-03	..SPACER,PLATE.......................................F76,F77	EA	2
22	13	PAOZZ	2840-00-756-3843	51547	1-140-253-01	..VANE,TURBINE NOZZLE................................F76,F77	EA	23

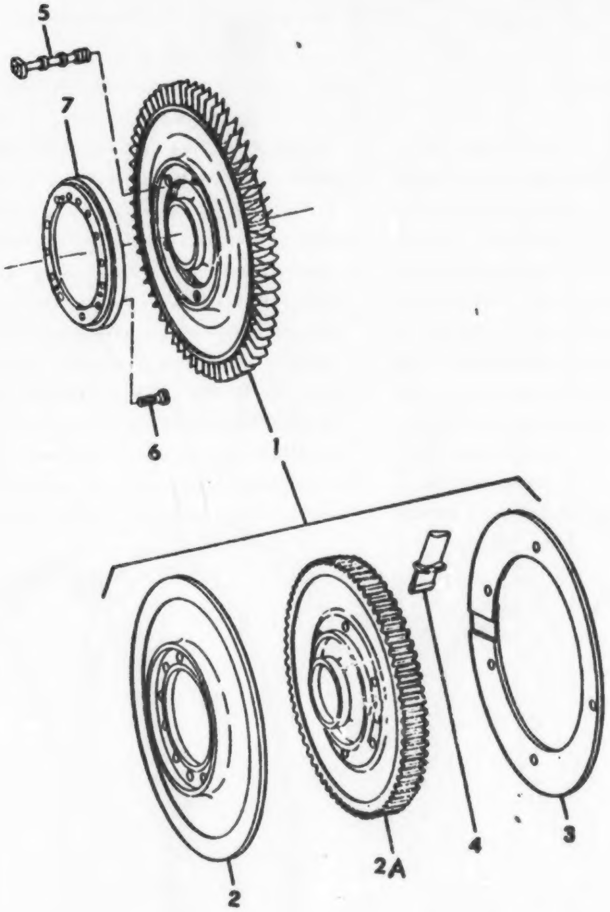

Figure 23. Rotor Assemblies, Gas Producer Nozzle and Cylinder (Sheet 1 of 2)

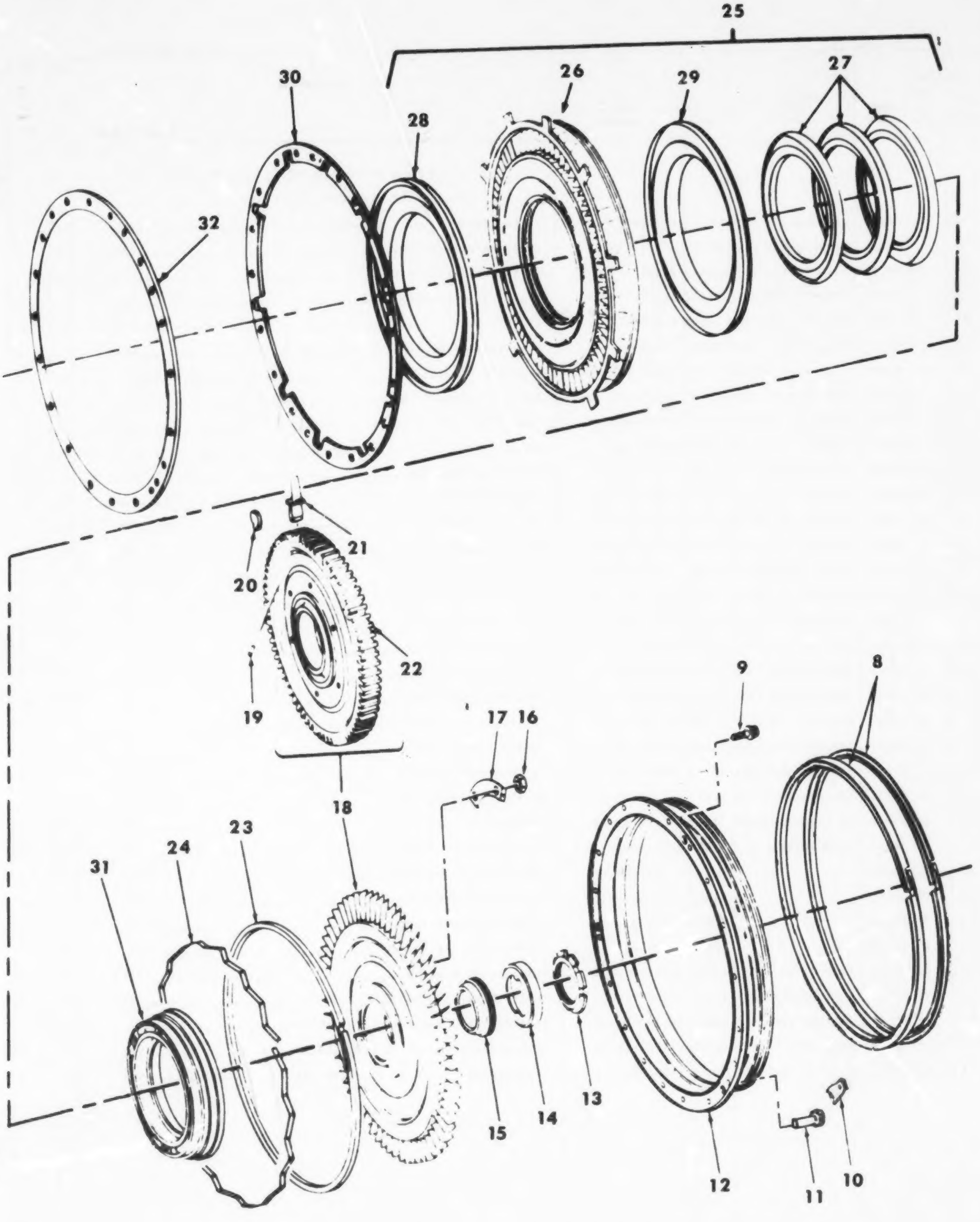

Figure 23. Rotor Assemblies, Gas Producer Nozzle and Cylinder (Sheet 2 of 2)

(1) ILLUSTRATION (a) FIG NO.	(b) ITEM NO.	(2) SMR CODE	(3) NATIONAL STOCK NUMBER	(4) FSCM	(5) PART NUMBER	(6) DESCRIPTION USABLE ON CODE	(7) U/M	(8) QTY INC IN UNIT
						GROUP 0404 ROTOR ASSEMBLIES,GAS PRODUCER NOZZLE AND CYLINDER (T53-L-13B)		
23	1	PAFDD	2840-01-031-8758	51547	1-130-883-12	ROTOR ASSEMBLY....FZL	EA	
23	2	PADZZ	2840-00-525-2512	51547	1-130-135-33	.DISK,TURBINE ROTOR....FZL	EA	
23	2A	PADZZ	2840-00-524-7533	51547	1-100-133-01	.DISK,TURBINE,TURBIN....FZL	EA	
23	3	PADZZ	2840-00-557-5051	51547	1-100-893-03	.RING ASSEMBLY,RETAI....FZL	EA	
23	4	PADZZ	2840-01-025-8340	51547	1-100-132-06	.BLADE....FZL	EA	
23	5	PADZZ	5306-00-948-3236	51547	1-100-292-02	BOLT,EXTERNALLY REL....FZL	EA	
23	6	PAFZZ	5306-00-453-5856	51547	1-110-137-01	BOLT,MACHINE....FZL	EA	
23	7	PADZZ	2840-00-053-1676	51547	1-110-161-03	RING,GAS PRODUCER S....FZL	EA	
23	8	PADZZ	2840-00-134-7672	51547	1-930-487-02	SEAL RING,METAL....FZL	EA	
23	9	PADZZ	5306-00-202-0441	96906	MS9705-08	BOLT,MACHINE....FZL	EA	
23	10	PADZZ	2840-00-524-8531	51547	1-120-034-01	PLATE,PIN RETAINER....FZL	EA	
23	11	PADZZ	5315-00-555-5667	51547	1-120-033-01	PIN,STRAIGHT,HEADED....FZL	EA	
23	12	PADZZ	2840-00-944-2547	51547	1-120-032-01	CYLINDER,SECOND STA....FZL	EA	
23	13	PADZZ	9310-00-750-8116	51547	1-130-034-01	NUT,FLAIR,ROUND....FZL	EA	
23	14	PADZZ	2840-00-766-8645	51547	1-100-423-01	LOCKRING,COMPRESSOR....FZL	EA	
23	15	PADZZ	5365-00-431-4013	51547	1-110-141-02	RING,EXTERNALLY THR....FZL	EA	
23	16	PADZZ	5310-00-945-5488	51547	1-100-293-01	NUT,PLAIN,HEXAGON....FZL	EA	
23	17	PADZZ	2840-00-945-5813	51547	1-100-131-01	TABWASHER,COMPRESSO....FZL	EA	
23	18	PAFDD	2840-01-008-5583	51547	1-101-360-04	TURBINE ROTOR,TURBI....FZL	EA	
23	19	PADZZ	5315-00-150-3625	51547	1-140-285-01	.PIN,STRAIGHT,HEADLE....FZL	EA	
23	20	PADZZ	2840-00-524-8551	51547	1-100-144-01	.PLATE,SEALING,SECON....FZL	EA	
23	21	PADZZ	2840-01-035-3719	51547	1-130-110-07	.BLADE,TURBINE ROTOR....FZL	EA	
23	22	PADZZ	2840-00-524-8521	51547	1-100-063-05	.DISK,TURBINE,TURBIN....FZL	EA	
23	23	PADZZ	5330-00-143-8369	51547	1-120-035-02	RETAINER,PACKING....FZL	EA	
23	24	PADZZ	5360-00-138-0880	51547	1-120-038-02	SPRING,FLAT....FZL	EA	
23	25	PADZZ	2840-00-178-3579	51547	1-120-000-14	NOZZLE,TURBINE,TURB....FZL	EA	
23	26	XADZZ		51547	1-120-039-14	.VANE,TURBINE NOZZLE....FZL	EA	
23	27	XADZZ		51547	1-120-028-01	.SEAL,TURBINE NOZZLE....FZL	EA	
23	28	XADZZ		51547	1-120-026-03	.SUPPORT,SECOND TURB....FZL	EA	
23	29	XADZZ		51547	1-120-027-02	.SUPPORT,SECOND TURB....FZL	EA	
23	30	PADZZ	2840-00-944-3597	51547	1-120-031-01	RING,SECOND STAGE N....FZL	EA	
23	31	PAFZZ	2840-00-943-6225	51547	1-100-294-03	SPACER,TURBINE ROTO....FZL	EA	
23	32	PADZZ	5365-00-948-0616	51547	1-120-029-01	SPACER,PLATE 0.022 TO 0.028 IN.THK....FZL	EA	
23	32	PADZZ	5365-00-178-1455	51547	1-120-029-02	SPACER,PLATE 0.010 TO 0.016 IN.THK....FZL	EA	
23	32	PADZZ	5365-00-350-6224	51547	1-120-029-03	SPACER,RING 0.078 TO 0.084 IN.THK....FZL	EA	

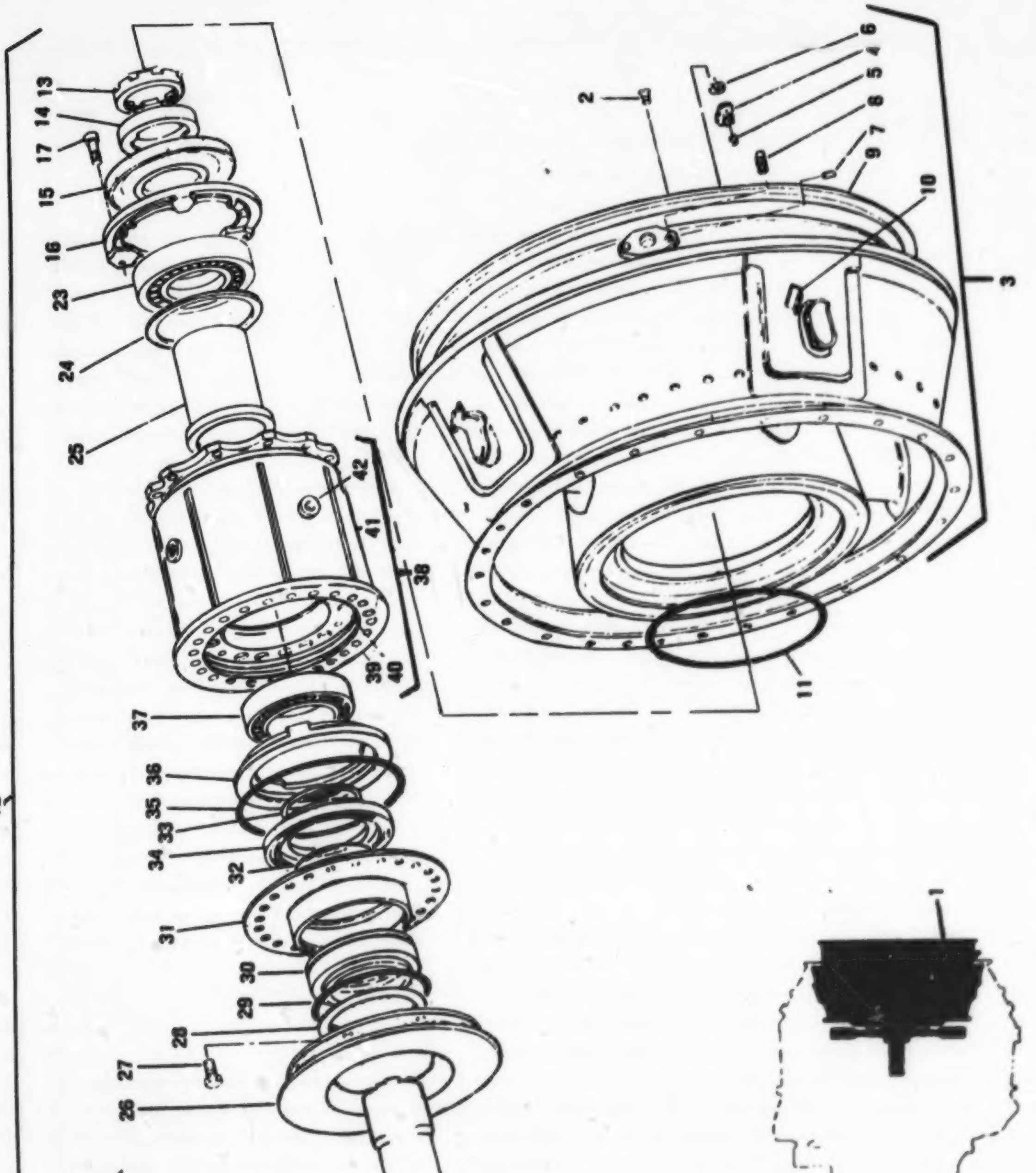

Figure 24. Second Stage Turbine Assembly

(1) ILLUSTRATION		(2)	(3)	(4)	(5)	(6) DESCRIPTION	(7)	(8)
(a) FIG NO	(b) ITEM NO	SMR CODE	NATIONAL STOCK NUMBER	FSCM	PART NUMBER	USABLE ON CODE	U/M	QTY INC IN UNIT
						GROUP 0406 SECOND STAGE TURBINE ASSEMBLY		
						(T53-L-11C,T53-L-13B)		
24	1	ACOCC		61567	1-150-352-31	SUPPORT ASSY,TURBIN SEE FIG.25 FOR BKDN....[illegible]	[illegible]	[illegible]
24	2	PAOZZ	5305-00-071-1120	96906	MS9156C-63	.SCREW,MACHINE....[illegible]	[illegible]	[illegible]
24	3	PAOFF	2840-00-561-0970	61567	1-150-203-01	.DIFFUSER,EXHAUST....[illegible]	[illegible]	[illegible]
24	4	PAOZZ	5340-00-515-5150	61567	1-300-266-01	..RETAINER,NUT PLC....[illegible]	[illegible]	[illegible]
24	5	PAFZZ	5320-00-884-5829	[illegible]50C	MS20427F3-6	..RIVET,SOLID....[illegible]	[illegible]	[illegible]
24	6	PAOZZ	5310-00-208-8022	88044	AN315C3R	..NUT,PLAIN,HEXAGON....[illegible]	[illegible]	[illegible]
24	7	PAOZZ	5315-00-150-1635	61567	1-140-205-01	..PIN,STRAIGHT,HEADLE....[illegible]	[illegible]	[illegible]
24	8	PAOZZ	5307-00-440-2020	61567	1-150-007-01	..STUD,CONTINUOUS THR....[illegible]	[illegible]	[illegible]
24	9	PAOZZ		61567	1-150-193-01	..DIFFUSER,EXHAUST....[illegible]	[illegible]	[illegible]
24	10	PAOZZ	5340-00-030-5264	61567	1-150-086-01	..BRACKET,ANGLE....[illegible]	[illegible]	[illegible]
24	11	PAOZZ	5330-00-257-1322	61567	1-330-462	.SEAL,RETAINER....[illegible]	[illegible]	[illegible]
24	12	AOOCC		61567	1-140-233-29	.TURBINE ROTOR,TURBI [illegible] SEE FIG.26 FOR BKDN....[illegible]	[illegible]	[illegible]
24	13	PAOZZ	5310-00-858-5708	61567	1-140-081-01	..NUT,PLAIN,ROUND....[illegible]	[illegible]	[illegible]
24	14	PAOZZ	2840-00-507-3619	61567	1-140-062-01	..CUP,LOCK,BEARING RE....[illegible]	[illegible]	[illegible]
24	15	PAOZZ	2840-00-561-1187	61567	1-140-230-04	..IMPELLER,POWER TURB....[illegible]	[illegible]	[illegible]
24	16	PAOZZ	2840-00-525-8444	61567	1-140-219-20	..RING,BEARING RETAIN....[illegible]	[illegible]	[illegible]
24	17	PAOZZ	5305-00-048-5414	96906	MS16995-11	..SCREW,CAP,SOCKET HE....[illegible]	[illegible]	[illegible]
24	18	PAOCD	2840-00-522-8282	61567	1-140-213-10	..TURBINE ROTOR,TURBI....[illegible]	[illegible]	[illegible]
24	19	PAOZZ	5315-00-150-1635	61567	1-140-205-01	..PIN,STRAIGHT,HEADLE....[illegible]	[illegible]	[illegible]
24	20	PAOZZ	2840-00-522-1371	61567	1-140-211-15	...BLADE,TURBINE ROTOR....[illegible]	[illegible]	[illegible]
24	21	PAOZZ	2840-00-573-1301	61567	1-140-211-16	...BLADE,TURBINE ROTOR....[illegible]	[illegible]	[illegible]
24	22	PAOZZ	2840-00-357-4026	61567	1-140-209-06	...DISK,TURBINE,TURBIN....[illegible]	[illegible]	[illegible]
24	23	PAOCD	3110-00-327-1032	61567	1-930-219	..BEARING,BALL,ANNULA....[illegible]	[illegible]	[illegible]
24	24	PAOZZ	5365-00-855-5308	61567	1-100-227-01	..SPACER,RING [illegible] TO [illegible] IN.THK....[illegible]	[illegible]	[illegible]
24	24	PAOZZ	5365-00-855-5302	61567	1-130-227-02	..SPACER,RING [illegible] TO [illegible] IN.THK....[illegible]	[illegible]	[illegible]
24	24	PAOZZ	5365-00-855-5301	61567	1-130-227-03	..SPACER,RING [illegible] TO [illegible] IN.THK....[illegible]	[illegible]	[illegible]
24	24	PAOZZ	5365-00-855-5300	61567	1-130-227-04	..SPACER,RING [illegible] TO [illegible] IN.THK....[illegible]	[illegible]	[illegible]
24	24	PAOZZ	5365-00-855-3319	61567	1-130-227-05	..SPACER,RING [illegible] TO [illegible] IN.THK....[illegible]	[illegible]	[illegible]
24	24	PAOZZ	5365-00-855-3318	61567	1-100-227-06	..SPACER,RING [illegible] TO [illegible] IN.THK....[illegible]	[illegible]	[illegible]
24	25	PAOZZ	2840-00-555-5344	61567	1-140-039-02	..SPACER,BEARING,TURB....[illegible]	[illegible]	[illegible]
24	26	PAOZZ	2840-00-855-8664	61567	1-140-073-01	..DEFLECTOR,EXHAUST F....[illegible]	[illegible]	[illegible]
24	27	PAOZZ	5306-00-201-5542	88044	AN13740A	..BOLT,MACHINE....[illegible]	[illegible]	[illegible]
24	28	PAOZZ	5365-00-445-7901	61567	1-730-067-01	..RING,RETAINING....[illegible]	[illegible]	[illegible]
24	29	PAOZZ	5330-00-558-2430	61567	1303C19F56	..PACKING,PREFORMED....[illegible]	[illegible]	[illegible]
24	30	PAOZZ	5330-00-567-1175	61567	1-330-216	..SEAL,PLAIN ENCASED....[illegible]	[illegible]	[illegible]
24	31	PAOZZ	2840-00-435-6550	61567	1-140-232-31	..SPACER,RING TURBINE....[illegible]	[illegible]	[illegible]
24	32	PAOZZ	5365-00-302-3163	61567	1-140-296-21	..SPACER,RING [illegible] TO [illegible] IN.THK....[illegible]	[illegible]	[illegible]

(1) ILLUSTRATION		(2)	(3)	(4)	(5)	(6)	(7)	(8)
(a) FIG NO	(b) ITEM NO	SMR CODE	NATIONAL STOCK NUMBER	FSCM	PART NUMBER	DESCRIPTION USABLE ON CODE	U/M	QTY INC IN UNIT
24	32	PAOZZ	5365-00-782-7164	51547	1-14C-256-02	..SPACER,RING 0.060 TO 0.062 IN.THK..................F76,F77	EA	1
24	32	PAOZZ	5365-00-775-3365	51547	1-14C-256-03	..SPACER,RING 0.063 TO 0.065 IN.THK..................F76,F77	EA	1
24	32	PAOZZ	5365-00-775-3366	51547	1-14C-256-04	..SPACER,RING 0.066 TO 0.068 IN.THK..................F76,F77	EA	1
24	32	PAOZZ	5365-00-775-3367	51547	1-14C-256-05	..SPACER,RING 0.069 TO 0.071 IN.THK..................F76,F77	EA	1
24	32	PAOZZ	5365-00-775-3368	51547	1-14C-256-06	..SPACER,RING 0.072 TO 0.074 IN.THK..................F76,F77	EA	1
24	32	PAOZZ	5365-00-775-3369	51547	1-14C-256-07	..SPACER,RING 0.075 TO 0.077 IN.THK..................F76,F77	EA	1
24	32	PAOZZ	5365-00-775-3370	51547	1-14C-256-08	..SPACER,RING 0.078 TO 0.080 IN.THK..................F76,F77	EA	1
24	32	PAOZZ	5365-00-775-3371	51547	1-14C-256-09	..SPACER,RING 0.081 TO 0.083 IN.THK..................F76,F77	EA	1
24	32	PAOZZ	5365-00-775-3372	51547	1-14C-256-10	..SPACER,RING 0.084 TO 0.086 IN.THK..................F76,F77	EA	1
24	32	PAOZZ	5365-00-775-3373	51547	1-14C-256-11	..SPACER,RING 0.087 TO 0.089 IN.THK..................F76,F77	EA	1
24	32	PAOZZ	5365-00-775-3349	51547	1-14C-256-12	..SPACER,RING 0.090 TO 0.092 IN.THK..................F76,F77	EA	1
24	32	PAOZZ	5365-00-775-3350	51547	1-14C-256-13	..SPACER,RING 0.093 TO 0.095 IN.THK..................F76,F77	EA	1
24	32	PAOZZ	5365-00-775-3351	51547	1-14C-256-14	..SPACER,RING 0.096 TO 0.098 IN.THK..................F76,F77	EA	1
24	32	PAOZZ	5365-00-775-3352	51547	1-14C-256-15	..SPACER,RING 0.099 TO 0.101 IN.THK..................F76,F77	EA	1
24	32	PAOZZ	5365-00-775-3353	51547	1-14C-256-16	..SPACER,RING 0.102 TO 0.104 IN.THK..................F76,F77	EA	1
24	32	PAOZZ	5365-00-775-5340	51547	1-14C-256-17	..SPACER,RING 0.105 TO 0.107 IN.THK..................F76,F77	EA	1
24	33	PAOZZ	5365-00-066-6621	51547	1-14C-111-01	..SPACER,RING 0.057 TO 0.059 IN.THK..................F76,F77	EA	1
24	33	PAOZZ	5365-00-066-6622	51547	1-14C-111-02	..SPACER,RING 0.060 TO 0.062 IN.THK..................F76,F77	EA	1
24	33	PAOZZ	5365-00-066-6623	51547	1-14C-111-03	..SPACER,RING 0.063 TO 0.065 IN.THK..................F76,F77	EA	1
24	33	PAOZZ	5365-00-066-6624	51547	1-14C-111-04	..SPACER,RING 0.066 TO 0.068 IN.THK..................F76,F77	EA	1
24	33	PAOZZ	5365-00-066-6625	51547	1-14C-111-05	..SPACER,RING 0.069 TO 0.071 IN.THK..................F76,F77	EA	1
24	33	PAOZZ	5365-00-066-6626	51547	1-14C-111-06	..SPACER,RING 0.072 TO 0.074 IN.THK..................F76,F77	EA	1
24	33	PAOZZ	5365-00-066-6627	51547	1-14C-111-07	..SPACER,RING 0.075 TO 0.077 IN.THK..................F76,F77	EA	1
24	33	PAOZZ	5365-00-066-6628	51547	1-14C-111-08	..SPACER,RING 0.078 TO 0.080 IN.THK..................F76,F77	EA	1
24	33	PAOZZ	5365-00-066-6629	51547	1-14C-111-09	..SPACER,RING 0.081 TO 0.083 IN.THK..................F76,F77	EA	1
24	33	PAOZZ	5365-00-066-7502	51547	1-14C-111-10	..SPACER,RING 0.084 TO 0.086 IN.THK..................F76,F77	EA	1
24	33	PAOZZ	5365-00-066-7503	51547	1-14C-111-11	..SPACER,RING 0.087 TO 0.089 IN.THK..................F76,F77	EA	1
24	33	PAOZZ	5365-00-066-7504	51547	1-14C-111-12	..SPACER,RING 0.090 TO 0.092 IN.THK..................F76,F77	EA	1
24	33	PAOZZ	5365-00-066-7505	51547	1-14C-111-13	..SPACER,RING 0.093 TO 0.095 IN.THK..................F76,F77	EA	1
24	33	PAOZZ	5365-00-066-7506	51547	1-14C-111-14	..SPACER,RING 0.096 TO 0.098 IN.THK..................F76,F77	EA	1
24	33	PAOZZ	5365-00-066-7508	51547	1-14C-111-15	..SPACER,RING 0.099 TO 0.101 IN.THK..................F76,F77	EA	1
24	33	PAOZZ	5365-00-066-7509	51547	1-14C-111-16	..SPACER,RING 0.102 TO 0.104 IN.THK..................F76,F77	EA	1
24	33	PAOZZ	5365-00-066-7511	51547	1-14C-111-17	..SPACER,RING 0.105 TO 0.107 IN.THK..................F76,F77	EA	1
24	34	PAOZZ	2840-00-981-3755	51547	1-14C-709-04	..IMPELLER,POWER TURB LMT BK 1-14C-[illegible]..................F76,F77	EA	1
24	35	PAOZZ	5330-00-[illegible]	51547	1-330-667	..SEAL,RETAINER..................F76,F77	EA	1
24	36	PAOZZ	2840-00-525-[illegible]	51547	1-14C-712-25	..RING,TURBINE RETAIN..................F76,F77	EA	1
24	37	PAOZZ	3110-00-[illegible]	51547	1-[illegible]-196	..BEARING,ROLLER,CYL I..................F76,F77	EA	1
24	38	PAOZZ	2840-00-[illegible]	51547	1-14C-253-11	..HOUSING,[illegible]..................F76,F77	EA	1
24	39	PAOZZ	2840-00-[illegible]	51547	1-14C-[illegible]-02	...BAFFLE,BEARING HSG..................F76,F77	EA	1
24	[illegible]	XBOZZ		51547	[illegible]	...SPACER,SLEEVE..................F76,F77	EA	1

(1) ILLUSTRATION (a) FIG NO.	(b) ITEM NO.	(2) SMR CODE	(3) NATIONAL STOCK NUMBER	(4) FSCM	(5) PART NUMBER	(6) DESCRIPTION USABLE ON CODE	(7) U/M	(8) QTY INC IN UNIT
24	41	XAFZZ		51547	1-14C-C16-C1	...BOSS,OIL INLET,POWE..................FZ6,F77	EA	1
24	42	XAFZZ		51547	1-14C-C11-01	...ADAPTER,OIL LINE,PE..................FZ6,F77	EA	1

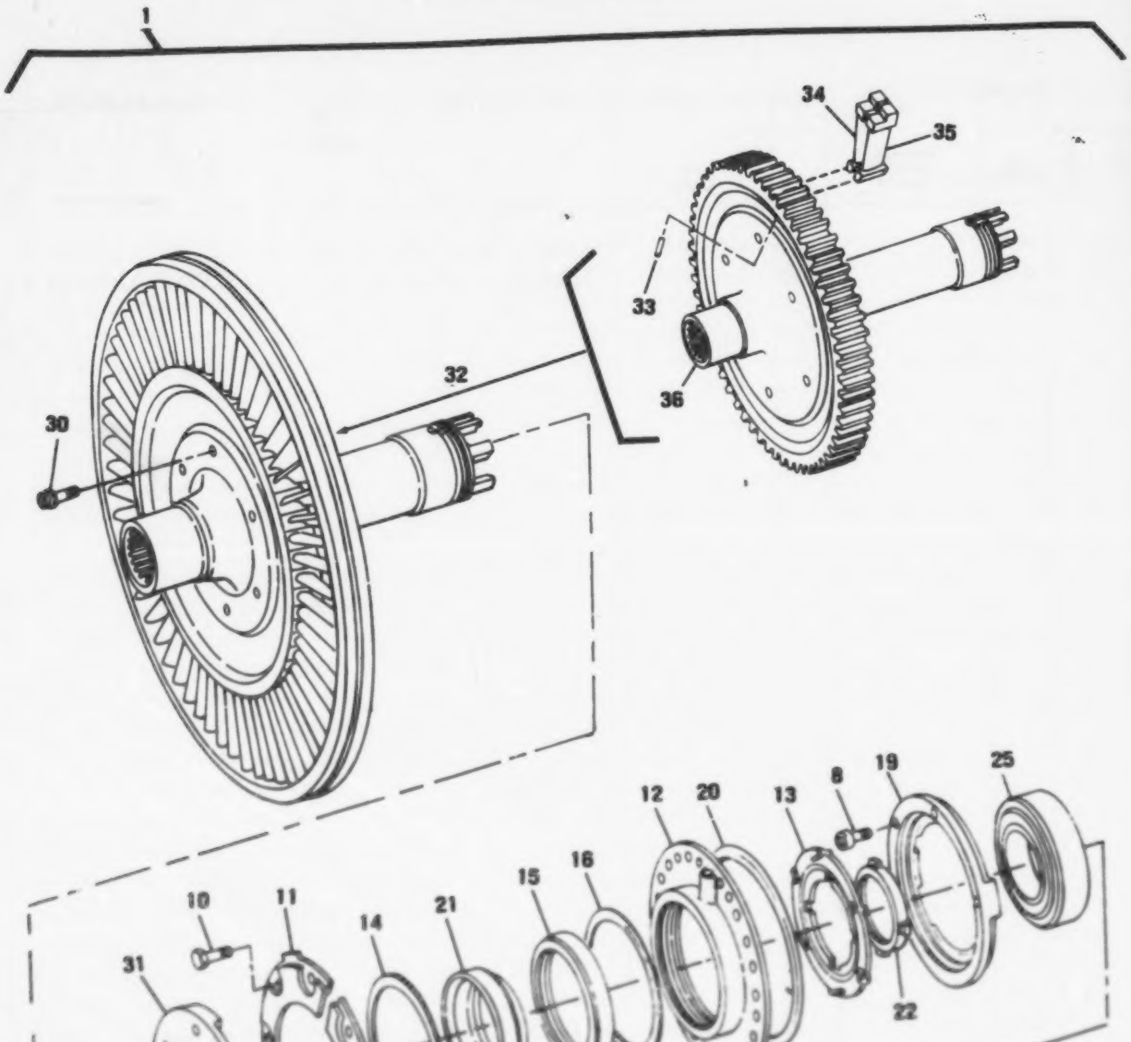

Figure 25. Turbine Rotor and Bearing Housing Assembly

(1) ILLUSTRATION (a) FIG NO	(b) ITEM NO	(2) SMR CODE	(3) NATIONAL STOCK NUMBER	(4) FSCM	(5) PART NUMBER	(6) DESCRIPTION USABLE ON CODE	(7) U/M	(8) QTY INC IN UNIT
						GROUP 0404 TURBINE ROTOR AND BEARING HOUSING ASSEMBLY (T53-L-13B)		
25	1	AOOOD		51547	1-140-530-14	ROTOR AND HOUSING A SEE FIG.1[illegible] FOR NHA F7L	EA	1
25	2	PAOZZ	5310-00-658-5308	51547	1-140-061-01	.NUT,PLAIN,ROUND F7L	EA	1
25	3	PAOZZ	2840-00-525-5147	51547	1-140-067-03	.CUP,LOCK,BEARING RE F7L	EA	1
25	4	PAOZZ	5305-00-412-4448	88044	AN510C5R4	.SCREW,MACHINE F7L	EA	1
25	5	PAOZZ	2840-00-525-4150	51547	1-140-192-02	.COVER,IMPELLER,TURB F7L	EA	1
25	6	PAOZZ	2840-00-525-4152	51547	1-140-191-02	.IMPELLER,REAR,SECON F7L	EA	1
25	7	PAFZZ	5340-00-533-1330	51547	1-140-181-01	.RING,REAR IMPELLER F7L	EA	1
25	8	PAOZZ	5305-00-068-5414	96906	MS16995-11	.SCREW,CAP,SOCKET HE F7L	EA	4
25	9	PAOZZ	2840-00-542-5948	51547	1-140-670-02	.RING ASSEMBLY,BEARI F7L	EA	1
25	10	PAOZZ	5306-00-281-5941	88044	AN126506	.BOLT,MACHINE F7L	EA	2
25	11	PAOZZ	2840-00-525-4148	51547	1-140-025-05	.DEFLECTOR ASSEMBLY F7L	EA	1
25	12	PAOZZ	2840-00-134-4554	51547	1-140-193-03	.HOUSING,SEAL,TURBIN F7L	EA	1
25	13	PAOZZ	2840-00-525-4145	51547	1-140-185-02	.IMPELLER,FORWARD,SE F7L	EA	1
25	14	PAOZZ	5365-00-543-5880	51547	1-300-316-01	.RING,RETAINING F7L	EA	1
25	15	PAOZZ	5330-00-544-3613	51547	1-300-336	.SEAL,PLAIN ENCASED F7L	EA	1
25	16	PAOZZ	5330-00-649-5314	51547	5703C19858	.PACKING,PREFORME F7L	EA	1
25	17	PAOZZ	5330-00-551-8883	51547	5703C00E1	.PACKING,PREFORMED F7L	EA	1
25	18	PAOZZ	2840-00-524-3367	51547	1-140-271-01	.TUBE,OIL TRANSFER F7L	EA	1
25	19	PAOZZ	2840-00-524-3429	51547	1-140-663-02	.RING ASSEMBLY,FORWA F7L	EA	1
25	20	PAOZZ	5330-00-257-1322	51547	1-300-467	.SEAL,RETAINER F7L	EA	1
25	21	PAOZZ	5330-00-543-8221	51547	1-140-260-01	.RETAINER,PACKING F7L	EA	1
25	22	PAOZZ	2840-00-525-3107	51547	1-140-162-02	.RING,POWER TURBINE F7L	EA	1
25	23	PAOZZ	3110-00-727-1032	51547	1-300-215	.BEARING,BALL,ANNULAR F7L	EA	1
25	24	PAOZZ	5365-00-699-1300	51547	1-130-227-01	.SPACER,RING 0.020 TO 0.022 IN.THK F7L	EA	1
25	24	PAOZZ	5365-00-699-1302	51547	1-130-227-02	.SPACER,RING 0.022 TO 0.024 IN.THK F7L	EA	1
25	24	PAOZZ	5365-00-699-1301	51547	1-130-227-03	.SPACER,RING 0.024 TO 0.026 IN.THK F7L	EA	1
25	24	PAOZZ	5365-00-699-1306	51547	1-130-227-04	.SPACER,RING 0.025 TO 0.031 IN.THK F7L	EA	1
25	24	PAOZZ	5365-00-699-1119	51547	1-130-227-05	.SPACER,RING 0.032 TO 0.034 IN.THK F7L	EA	1
25	24	PAOZZ	5365-00-699-1118	51547	1-130-227-06	.SPACER,RING 0.035 TO 0.037 IN.THK F7L	EA	1
25	24	PAOZZ	5365-00-699-1117	51547	1-130-227-07	.SPACER,RING 0.038 TO 0.040 IN.THK F7L	EA	1
25	24	PAOZZ	5365-00-699-1116	51547	1-130-227-08	.SPACER,RING 0.041 TO 0.043 IN.THK F7L	EA	1
25	24	PAOZZ	5365-00-699-1115	51547	1-130-227-09	.SPACER,RING 0.044 TO 0.046 IN.THK F7L	EA	1
25	24	PAOZZ	5365-00-699-11[illegible]	51547	1-130-227-10	.SPACER,RING 0.047 TO 0.049 IN.THK F7L	EA	1
25	24	PAOZZ	5365-00-699-1309	51547	1-130-227-11	.SPACER,RING 0.050 TO 0.052 IN.THK F7L	EA	1
25	24	PAOZZ	5365-00-699-1308	51547	1-130-227-12	.SPACER,RING 0.053 TO 0.055 IN.THK F7L	EA	1
25	24	PAOZZ	5365-00-699-1307	51547	1-130-227-13	.SPACER,RING 0.056 TO 0.058 IN.THK F7L	EA	1
25	24	PAOZZ	5365-00-699-1304	51547	1-130-227-14	.SPACER,RING 0.059 TO 0.061 IN.THK F7L	EA	1
25	24	PAOZZ	5365-00-699-1305	51547	1-130-227-15	.SPACER,RING 0.062 TO 0.064 IN.THK F7L	EA	1

(1) ILLUSTRATION (a) FIG NO.	(b) ITEM NO	(2) SMR CODE	(3) NATIONAL STOCK NUMBER	(4) FSCM	(5) PART NUMBER	(6) DESCRIPTION USABLE ON CODE	(7) U/M
25	24	PAOZZ	5365-00-655-7767	51547	1-130-227-16	.SPACER,RING 0.065 TO 0.067 IN.THK....................FZL	EA
25	24	PAOZZ	5365-00-655-7763	51547	1-130-227-17	.SPACER,RING 0.068 TO 0.070 IN.THK....................FZL	EA
25	24	PAOZZ	5365-00-655-7769	51547	1-100-227-18	.SPACER,RING 0.071 TO 0.073 IN.THK....................FZL	EA
25	24	PAOZZ	5365-00-655-7766	51547	1-100-227-19	.SPACER,RING 0.074 TO 0.076 IN.THK....................FZL	EA
25	24	PAOZZ	5365-00-655-7765	51547	1-130-227-20	.SPACER,RING 0.077 TO 0.079 IN.THK....................FZL	EA
25	24	PAOZZ	5365-00-655-7766	51547	1-130-227-21	.SPACER,RING 0.080 TO 0.082 IN.THK....................FZL	EA
25	24	PAOZZ	5365-00-771-7167	51547	1-130-227-22	.SPACER,RING 0.080 TO 0.082 IN.THK....................FZL	EA
25	24	PAOZZ	5365-00-771-7164	51547	1-130-227-23	.SPACER,RING 0.086 TO 0.088 IN.THK....................FZL	EA
25	24	PAOZZ	5365-00-771-7165	51547	1-130-227-24	.SPACER,RING 0.089 TO 0.091 IN.THK....................FZL	EA
25	24	PAOZZ	5365-00-554-4277	51547	1-100-227-25	.SPACER,RING 0.092 TO 0.094 IN.THK....................FZL	EA
25	24	PAOZZ	5365-00-554-4276	51547	1-130-227-26	.SPACER,RING 0.095 TO 0.097 IN.THK....................FZL	EA
25	24	PAOZZ	5365-00-554-4275	51547	1-130-227-27	.SPACER,RING 0.098 TO 0.100 IN.THK....................FZL	EA
25	24	PAOZZ	5365-00-554-4274	51547	1-130-227-29	.SPACER,RING 0.101 TO 0.103 IN.THK....................FZL	EA
25	24	PAOZZ	5365-00-554-4273	51547	1-130-227-29	.SPACER,RING 0.104 TO 0.106 IN.THK....................FZL	EA
25	24	PAOZZ	5365-00-554-4272	51547	1-130-227-30	.SPACER,RING 0.107 TO 0.109 IN.THK....................FZL	EA
25	24	PAOZZ	5365-00-587-5533	51547	1-130-227-31	.SPACER,RING 0.110 TO 0.112 IN.THK....................FZL	EA
25	24	PAOZZ	5365-00-585-2830	51547	1-100-227-32	.SPACER,RING 0.113 TO 0.115 IN.THK....................FZL	EA
25	25	PAFFF	3110-01-035-8831	51547	1-330-584-01	.BEARING,ROLLER,CYLI....................FZL	EA
25	26	PAOZZ	2840-00-555-5744	51547	1-140-039-02	.SPACER,BEARING,TUBE....................FZL	EA
25	27	PAFDD	2840-01-011-5045	51547	1-140-550-07	.HOUSING,ANTIFRICTIO....................FZL	EA
25	28	PAOZZ	5365-00-014-5667	51547	STD3024C29	..SPACER,SLEEVE....................FZL	EA
25	29	PAOZZ	2840-00-522-5852	51547	1-140-011-01	..ADAPTER,OIL LINE,RE....................FZL	EA
25	30	PAFZZ	5306-00-548-2243	51547	1-140-157-02	.BOLT,MACHINE....................FZL	EA
25	31	PAOZZ	2840-00-525-4146	51547	1-140-146-02	.PLATE,RETAINING,ROW....................FZL	EA
25	32	PADDD	2840-01-008-5582	51547	1-140-550-07	.TURBINE ROTOR,TURBI....................FZL	EA
25	33	PAOZZ	5315-00-190-3435	51547	1-140-285-01	..PIN,STRAIGHT,HEADLE....................FZL	EA
25	34	PAOZZ	2840-00-525-4151	51547	1-140-273-03	..BLADE,TURBINE ROTOR....................FZL	EA
25	35	PAOZZ	2840-00-543-3216	51547	1-140-274-02	..BLADE,TURBINE ROTOR....................FZL	EA
25	36	PAOZZ	2840-01-008-5586	51547	1-140-272-06	..DISK AND HUB,TURBIN....................FZL	EA

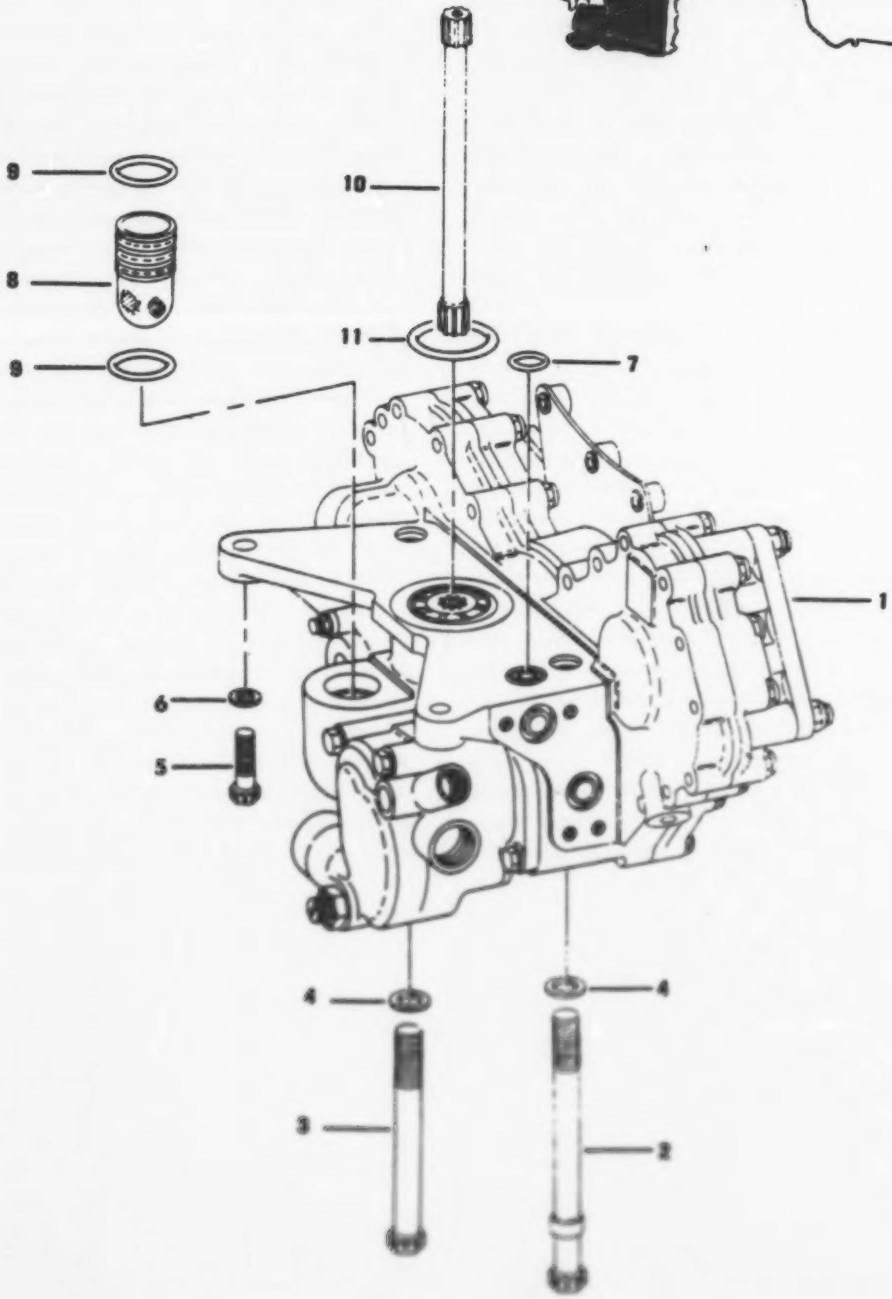

Figure 26. Accessory Gearbox Assembly

(1) ILLUSTRATION (a) FIG NO	(b) ITEM NO	(2) SMR CODE	(3) NATIONAL STOCK NUMBER	(4) FSCM	(5) PART NUMBER	(6) DESCRIPTION USABLE ON CODE	(7) U/M	(8) QTY INC IN UNIT
						GROUP 0405 ACCESSORY GEAR BOX		
						ACCESSORY GEARBOX ASSEMBLY		
26	1	PAOOD	2840-00-587-3536	51547	1-080-250-13	GEARBOX,ACCESSORY D SEE FIG.27 FOR BREAKDOWN..........F76,F77	EA	1
26	1	PAOOD	2840-00-727-4663	51547	1-080-250-16	GEARBOX,ACCESSORY D SEE FIG.27 FOR BREAKDOWN..........F7L	EA	1
26	2	PAOZZ	5306-00-660-3271	51547	1-080-081-01	BOLT,SHOULDER..	EA	1
26	3	PAOZZ	5306-00-575-3373	88044	AN104146	BOLT,MACHINE...F76,F77	EA	1
26	4	PAOZZ	5310-00-064-5437	51547	1-080-051-01	WASHER,FLAT..	EA	2
26	5	PAOZZ	5306-00-230-2671	88044	AN104016	BOLT,MACHINE...F76,F77	EA	2
26	5	PAOZZ	5306-00-211-5165	96906	MS9532-14	BOLT,MACHINE...F7L	EA	2
26	6	PAOZZ	5310-00-064-5438	51547	1-080-051-02	WASHER,FLAT..	EA	2
26	7	PCOZZ	5330-00-585-1066	96906	MS29561-114	PACKING,PREFORMED..	EA	1
26	8	PAOZZ	2840-00-872-6125	51547	1-080-430-01	STRAINER ELEMENT,SE..	EA	1
26	9	PCOZZ	5330-00-580-5543	96906	MS29561-122	PACKING,PREFORMED..	EA	2
26	10	PAOZZ	2840-00-784-3585	51547	1-080-282-01	SHAFT,ACCESSORY DRI..	EA	1
26	11	PCOZZ	5330-00-800-6351	96906	MS29561-131	PACKING,PREFORMED..	EA	1

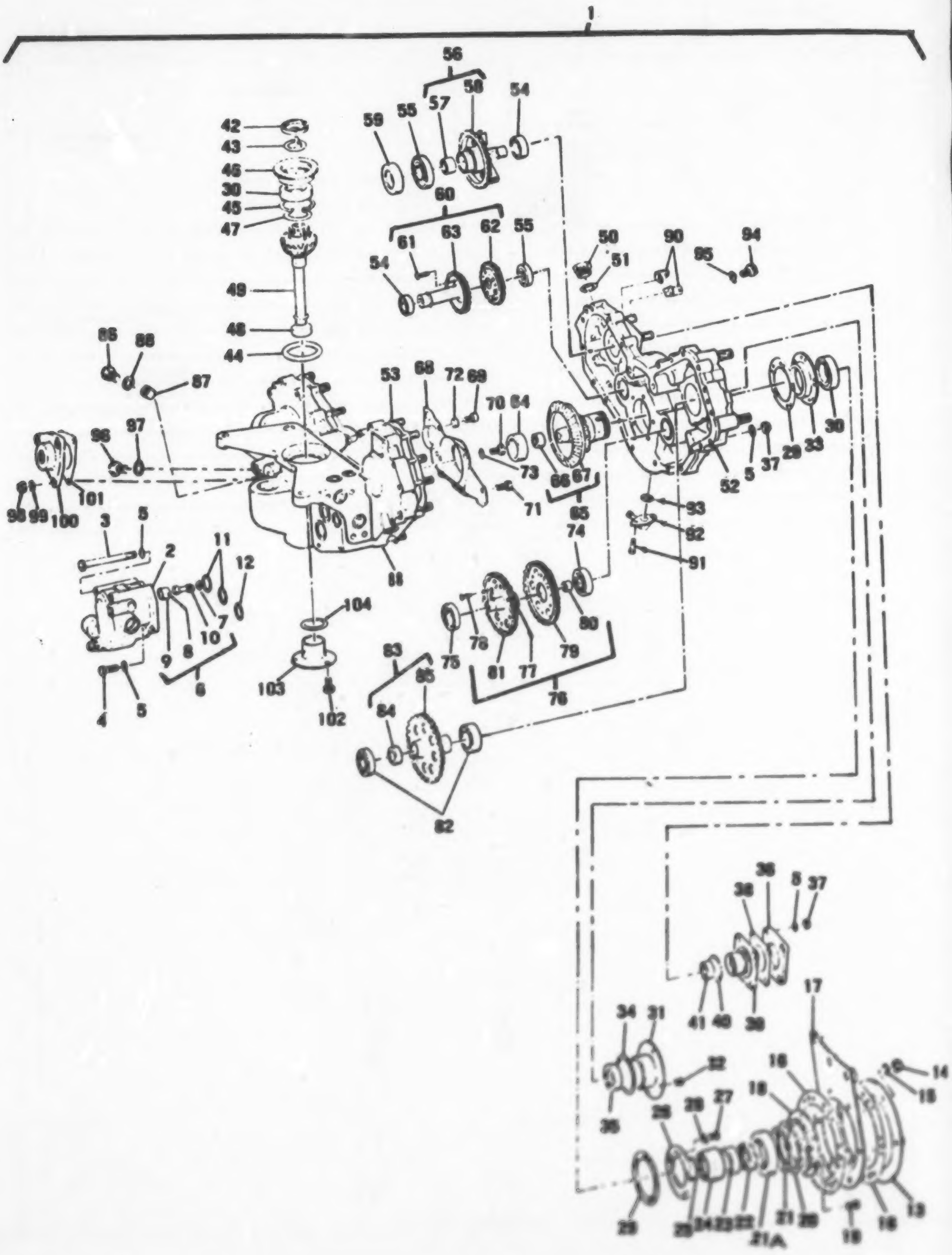

Figure 27. Gearbox Assembly, Accessory

(1) ILLUSTRATION (a) FIG NO.	(b) ITEM NO	(2) SMR CODE	(3) NATIONAL STOCK NUMBER	(4) FSCM	(5) PART NUMBER	(6) DESCRIPTION USABLE ON CODE	(7) U/M	(8) QTY INC IN UNIT
						GROUP 0405 GEARBOX ASSEMBLY,ACCESSORY		
27	1	PAOOD	2840-00-567-3536	51547	1-080-250-13	GEARBOX,ACCESSORY E SEE FIG.26 FOR NHA................EZ6,EZ7	EA	[illegible]
27	1	PAOOD	2840-00-727-4463	51547	1-080-250-16	GEARBOX,ACCESSORY E SEE FIG.26 FOR NHA..............EZL	EA	1
27	2	PAUOD	4320-00-533-7488	51547	1-300-212	.PUMP,ROTARY SEE FIG.62 FOR BREAKDOWN........................	EA	1
27	3	PAOZZ	5306-00-056-8240	88044	AN103F40	.BOLT,MACHINE..	EA	2
27	4	PAOZZ	5306-00-257-0045	88044	AN103911	.BOLT,MACHINE..	EA	2
27	5	PAOZZ	5310-00-167-0835	88044	AN960-416L	.WASHER,FLAT..	EA	27
27	6	PAUOD	2840-00-766-8633	51547	1-080-350-04	.SHAFT ASSY,OIL PUMP..	EA	1
27	7	PAOZZ	5365-00-680-3505	51547	STD303387	..RING,RETAINING..	EA	1
27	8	PAOZZ	5315-00-804-5316	96906	MS5105-59	..PIN,STRAIGHT,HEA..	EA	1
27	9	XAOZZ		51547	1-080-279-02	..COUPLING,SPLINED,OI..	EA	1
27	10	XAOZZ		51547	1-080-276-03	..SHAFT,SHOULDERED..	EA	[illegible]
27	11	PCOZZ	5330-00-580-5543	96906	MS29561-122	.PACKING,PREFORMED..	EA	2
27	12	XDOZZ	5330-00-762-4713	96906	MS29561-115	.PACKING,PREFORMED..	EA	1
27	13	PAUZZ	2595-00-313-1633	88044	AN130C41	.COVER,ENGINE ACCESS USED FOR SHIPPING ONLY................	EA	1
27	14	PAOZZ	5310-00-550-0039	96906	MS21044N6	.NUT,SELF-LOCKING,HE..	EA	[illegible]
27	15	PAOZZ	5310-00-167-0837	88044	AN960-616L	.WASHER,FLAT..	EA	[illegible]
27	16	PAOZZ	5330-00-654-8522	51547	1-080-026-01	.GASKET,PAD,STARTER..	EA	2
27	17	PAOZZ	2840-00-576-5303	51547	1-080-100-03	.SUPPORT ASSEMBLY,AC..	EA	[illegible]
27	18	PAOZZ	2840-00-656-8522	51547	1-080-274-01	.HOUSING,SEAL,STARTE..	EA	1
27	19	PAOZZ	5305-00-273-7480	96906	MS24678-9	.SCREW,CAP,SOCKET HE..	EA	6
27	20	PAOZZ		51547	STD3015057	.PACKING,PREFORMED..	EA	1
27	21	PCOZZ	5330-00-618-1444	51547	STD3019046	.PACKING,PREFORMED..	EA	[illegible]
27	21A	PAOZZ	5330-00-853-0247	51547	1-300-232-02	.SEAL,PLAIN ENCASED..	EA	[illegible]
27	22	PAOZZ	5310-00-670-1153	51547	1-080-084-01	.NUT,PLAIN,ROUND..	EA	1
27	23	PAOZZ	2840-00-766-1319	51547	1-080-083-07	.CUP,LOCK,ACCESSORY..	EA	[illegible]
27	24	PAOZZ	2840-00-458-8519	51547	1-080-275-02	.SPACER,SEAL,STARTER..	EA	[illegible]
27	25	PAOZZ	5330-00-725-4027	96906	MS29561-025	.PACKING,PREFORMED..	EA	1
27	26	PAOZZ	2840-00-439-0058	51547	1-080-269-01	.PLATE,RETAINING,TOR..	EA	1
27	27	PAOZZ	5306-00-143-2257	51547	STD3053-3	.BOLT,MACHINE..	EA	[illegible]
27	28	PAOZZ	5310-00-770-6240	51547	STD3023H1	.WASHER,TAB..	EA	[illegible]
27	29	PAOZZ	5365-00-439-0057	51547	1-080-271-01	.SHIM..	EA	2
27	30	PAFOO	3110-00-080-3406	51547	1-300-306	.BEARING,BALL,ANNULAR..	EA	[illegible]
27	31	PAOZZ	2840-00-439-0055	51547	1-080-268-01	.HOUSING,ANTIFRICTIC..	EA	1
27	32	PAOZZ	5306-00-282-3333	88044	AN137726	.BOLT,MACHINE..	EA	[illegible]
27	33	PAOZZ	2840-00-784-2571	51547	1-080-266-01	.LINER,FUEL CONTROL..	EA	[illegible]
27	34	PCOZZ	5330-00-550-5154	96906	MS29561-135	.PACKING,PREFORMED..	EA	1
27	35	PAOZZ	5330-00-857-1491	51547	1-330-231-01	.SEAL..	EA	[illegible]
27	36	PAOZZ	2840-00-149-3561	88044	AN1200A3	.COVER,ACCESS..	EA	[illegible]
27	37	PAOZZ	5310-00-869-1460	96906	MS21042-4	.NUT,SELF-LOCKING,EX..	EA	[illegible]

(1) ILLUSTRATION (a) FIG NO	(b) ITEM NO	(2) SMR CODE	(3) NATIONAL STOCK NUMBER	(4) FSCM	(5) PART NUMBER	(6) DESCRIPTION USABLE ON CODE	(7) U/M	(8) QTY INC IN UNIT
27	38	PAOZZ	5330-00-023-7623	96906	MS9134-01	.GASKET..	EA	1
27	39	PAOZZ	2840-00-784-3553	51547	1-C8C-256-01	.FLANGE,TACHOMETER D...	EA	1
27	40	PAOZZ	5330-00-564-0058	96906	MS29561-024	.PACKING,PREFORMED...	EA	1
27	41	PAOZZ	5330-00-143-8868	51547	1-30C-234-02	.SEAL,PLAIN ENCASED...	EA	1
27	42	PAOZZ	5310-00-475-5442	51547	1-C8C-259-01	.NUT,PLAIN,ROUND..	EA	1
27	43	PAOZZ	5310-00-740-3378	51547	1-C8C-267-01	.WASHER,KEY..	EA	1
27	44	PAOZZ	5330-00-800-6353	96906	MS29561-138	.PACKING,PREFORMED..	EA	1
27	45	PAOZZ	5365-00-543-4110	96906	MS16625-3185	.RING,RETAINING..	EA	1
27	46	PAOZZ	2840-00-738-3575	51547	1-C8C-261-01	.LINER,PINION,OUTER,..	EA	1
27	47	PAOZZ	5365-00-825-3367	51547	1-C8C-014-01	.SHIM..	EA	1
27	48	PAOZZ	3110-00-580-3268	51547	1-30C-307	.BEARING,BALL,ANNULAR..	EA	1
27	49	PAOZZ	3020-00-735-7585	51547	1-C8C-320-01	.SHAFT GEAR ASSEMBLY..	EA	1
27	50	PAOZZ	5365-00-411-5760	96906	MS9404-06	.PLUG,MACHINE THREAD...	EA	1
27	51	PAOZZ	5330-00-576-5525	80205	NAS617-6	.PACKING,PREFORMED...	EA	1
27	52	PAOOO	2840-00-587-3434	51547	1-C8C-330-09	.COVER,ACCESSORY GEA SEE FIG.28 FOR BREAKDOWN........F26,F27	EA	1
27	52	PAOOO	2840-00-717-7601	51547	1-C8C-330-07	.COVER ASSEMBLY,ACCE SEE FIG.28 FOR BREAKDOWN........F28	EA	1
27	53	PAOZZ	5330-00-475-6532	51547	1-C8C-273-01	.GASKET,COVER..	EA	1
27	54	PAOZZ	3110-00-580-3253	51547	1-30C-303	.BEARING,BALL,ANNULAR..	EA	4
27	55	PAOZZ	3110-00-853-0477	51547	1-30C-305	.BEARING,BALL,ANNULAR..	EA	1
27	56	PAOOO	3020-00-854-6275	51547	1-C8C-370-01	.GEAR,SPUR...	EA	1
27	57	PAOZZ	2840-00-475-0052	51547	1-C8C-037-01	..PLUG,SHAFTGEAR,ACCE..	EA	1
27	58	XAOZZ		51547	1-C8C-295-01	..GEARSHAFT,TACHOMETE..	EA	1
27	59	PAOZZ	5330-00-883-1157	51547	1-30C-233	.SEAL,PLAIN ENCASED...	EA	1
27	60	PAOZZ	3040-00-400-7389	51547	1-C8C-280-02	.GEARSHAFT,SPUR...	EA	1
27	61	PAOZZ	5320-00-854-5837	51547	51C3036-01	..RIVET,SOLID..	EA	2
27	62	XAOZZ		51547	1-C8C-253-01	..GEAR,SPUR..	EA	1
27	63	XAOZZ		51547	1-C8C-154-04	..GEARSHAFT,SPUR..	EA	1
27	64	PAOZZ	3110-00-884-1626	51547	1-30C-312	.BEARING,ROLLER,CYLI..	EA	1
27	65	PAOOO	3040-00-475-0058	51547	1-C8C-313-01	.GEAR ASSEMBLY,ACCES..	EA	1
27	66	PAOZZ	2840-00-475-2638	51547	1-C8C-159-01	..PLUG,GEAR,DRIVE,OUT..	EA	1
27	67	XAOZZ		51547	1-C8C-153-03	..GEARSHAFT,BEVEL-SPL..	EA	1
27	68	PAOZZ	2840-00-854-6274	51547	1-C8C-296-01	.BAFFLE,ACCESSORY GE..	EA	1
27	69	PAOZZ	5305-00-840-1439	51547	51C3093-69	.SCREW,CAP,SOCKET HE..	EA	7
27	70	PAOZZ	5305-00-855-4565	51547	1-C8C-298-01	.SCREW,SHOULDER...	EA	1
27	71	PAOZZ	5305-00-840-1430	51547	1-C8C-299-01	.SCREW,CAP,SOCKET HE..	EA	1
27	72	PAOZZ	5365-00-882-1070	51547	1-C8C-297-01	.SPACER,SLEEVE..	EA	7
27	73	PAOZZ	5330-00-580-5523	96906	MS29561-308	.PACKING,PREFORMED...	EA	1
27	74	PAOZZ	3110-00-580-7256	51547	1-30C-306	.BEARING,BALL,ANNULAR..	EA	1
27	75	PAOZZ	3110-00-580-3253	51547	1-30C-309	.BEARING,BALL,ANNULAR..	EA	1
27	76	PAOOO	3020-00-380-8825	51547	1-C8C-763-01	.GEARSHAFT,ASSEMBLY...	EA	1

(1) ILLUSTRATION (a) FIG NO	(b) ITEM NO	(2) SMR CODE	(3) NATIONAL STOCK NUMBER	(4) FSCM	(5) PART NUMBER	(6) DESCRIPTION USABLE ON CODE	(7) U/M	(8) QTY INC IN UNIT
27	77	PADZZ	5315-00-815-2275	80205	NAS561C3-11	..PIN,SPRING..	EA	1
27	78	PADZZ	5320-00-854-5637	51547	51C3036-31	..RIVET,SOLID..	EA	4
27	79	XADZZ		51547	1-080-251-01	..GEAR,SPUR..	EA	1
27	80	PAOZZ	2840-00-435-0093	51547	1-080-046-01	..CUP-RETAINING,OIL P..	EA	1
27	81	PAOZZ	3020-00-139-2551	51547	1-080-044-03	..GEAR,SPUR..	EA	1
27	82	PADZZ	3110-00-853-0477	51547	1-300-005	.BEARING,BALL,ANNULA..	EA	1
27	83	PADZZ	3040-00-587-3345	51547	1-080-270-04	.GEARSHAFT,SPUR..	EA	1
27	84	XADZZ		51547	1-080-159-02	..PLUG..	EA	1
27	85	XADZZ		51547	1-080-252-06	..GEARSHAFT..	EA	1
27	86	PAOZZ	4730-00-766-2552	51547	1-300-243	.CHIP DETECTOR,MAGNE..	EA	1
27	87	PAFZZ	5340-00-290-5144	96906	MS124661	.INSERT,SCREW THREAD..	EA	1
27	88	PAOZZ	5330-00-576-5525	80205	NAS617-6	.PACKING,PREFORMED..	EA	1
27	89	PCOZZ	5330-00-250-5013	88044	AN6227-13	.PACKING,PREFORMED AFTER MODIFICATION TO GEARBOX.....F77,F78	EA	1
27	89	PAODD	2840-00-587-1622	51547	1-080-343-09	.HOUSING,GEARBOX,TUR SEE FIG.28 FOR BREAKDOWN............	EA	1
27	90	PAOZZ	5340-00-511-5262	51547	1-160-475-01	.BRACKET,ANGLE..F78	EA	1
27	91	PAOZZ	5305-00-055-2357	96906	MS24677-9	.SCREW,CAP,SOCKET HE..F78	EA	2
27	92	PAOZZ	4730-00-504-5162	51547	1-160-426-01	.ELBOW,TUBE TO BOSS..F78	EA	1
27	93	PCOZZ	5330-00-542-1620	96906	MS29561-010	.PACKING,PREFORMED..F78	EA	1
27	94	PAOZZ	5365-00-458-3653	96906	MS9404-30	.PLUG,MACHINE THR..	EA	2
27	95	PCOZZ	5330-00-535-1565	80205	NAS617-3	.PACKING,PREFORMED..	EA	2
27	96	PAOZZ	5365-00-545-1176	96906	MS9404-36	.PLUG,MACHINE THREAD..	EA	1
27	97	PCOZZ	5330-00-533-2010	80205	NAS617-4	.PACKING,PREFORMED..	EA	1
27	98	PAOZZ	5310-00-859-5557	96906	MS21C4914	.NUT,SELF-LOCKING,HE..	EA	3
27	99	PAOZZ	5310-00-167-0815	88044	AN960-416L	.WASHER,FLAT..	EA	3
27	100	PAOZZ	2840-00-855-3443	51547	1-080-071-01	.COVER,PAD,ACCESSORY..	EA	1
27	101	PAOZZ	5330-00-854-8531	51547	1-080-072-01	.GASKET..	EA	1
27	102	PAOZZ	5306-00-183-2010	88044	AN6H10	.BOLT,MACHINE..	EA	4
27	103	PAOZZ	2840-00-384-1992	51547	1-080-267-01	.HOUSING,ANTIFRICTION..	EA	1
27	104	PAOZZ	5330-00-800-4470	96906	MS29561-127	.PACKING,PREFORMED..	EA	1

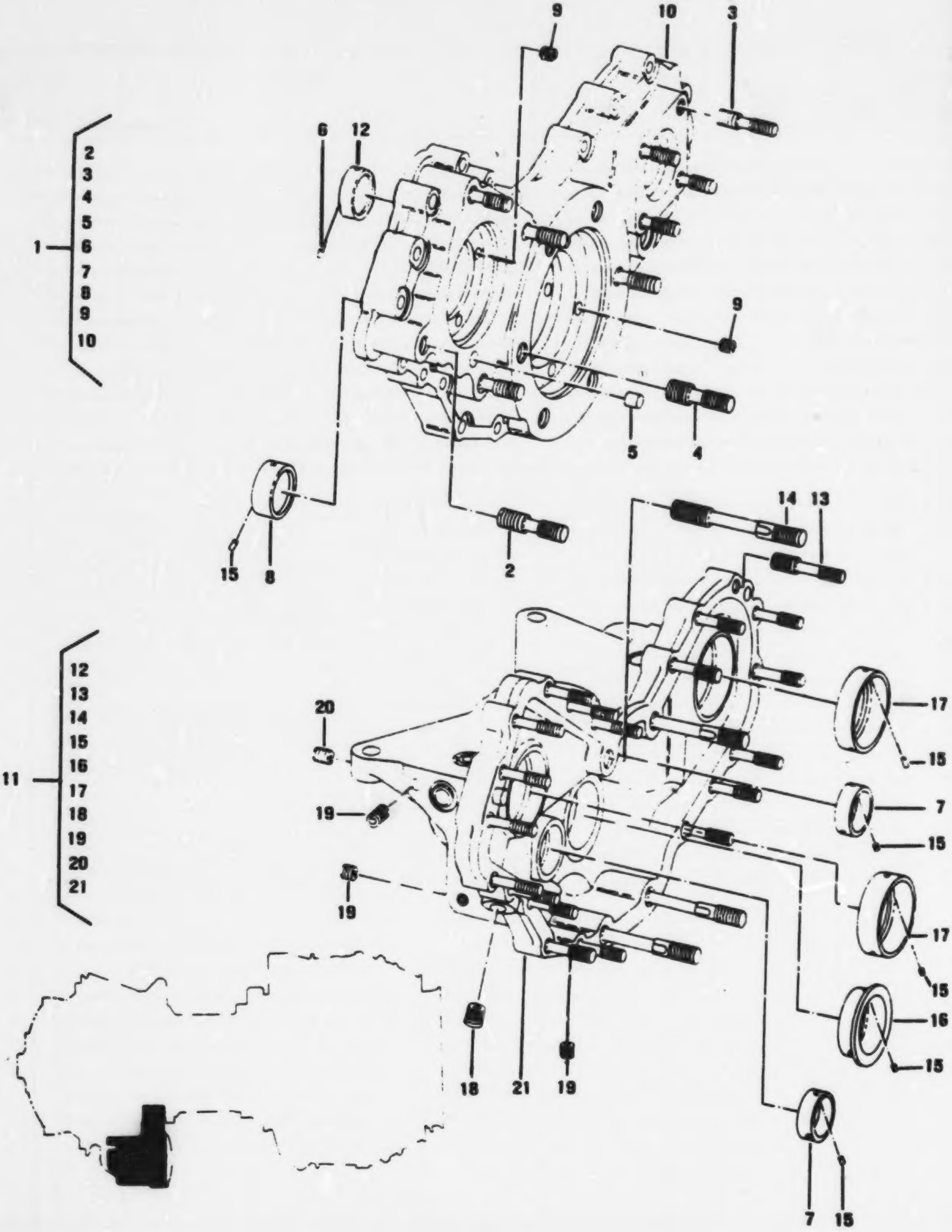

Figure 28. Cover, Accessory Gearbox

(1) ILLUSTRATION (a) FIG NO	(b) ITEM NO	(2) SMR CODE	(3) NATIONAL STOCK NUMBER	(4) FSCM	(5) PART NUMBER	(6) DESCRIPTION USABLE ON CODE	(7) U/M	(8) QTY INC IN UNIT
						GROUP 0405 COVER,ACCESSORY GEARBOX		
28	1	PADDD	2840-00-587-3674	51547	1-080-330-05	COVER,ACCESSORY GEA SEE FIG.27 FOR NHA..............E76,E77	EA	1
28	1	PADDD	2840-00-717-7601	51547	1-080-330-07	COVER ASSEMBLY,ACCE SEE FIG.27 FOR NHA..............E71	EA	1
28	2	PADZZ	5307-00-615-5328	51547	STD3CC788A	.STUD,STEPPED 0.003 IN.OVERSIZE..........................	EA	1
28	2	PADZZ	5307-00-615-5330	51547	STD3CC788B	.STUD,STEPPED 0.007 IN.OVERSIZE..........................	EA	1
28	2	PADZZ	5307-00-188-2526	51547	STD3CC788B	.STUD 0.012 IN.OVERSIZE..........................	EA	1
28	3	PADZZ	5307-00-775-7257	51547	1-080-285-01A	.STUD,STEPPED 0.003 IN.OVERSIZE..........................	EA	1
28	3	PADZZ	5307-00-805-6832	51547	1-080-285-01B	.STUD,STEPPED 0.007 IN.OVERSIZE..........................	EA	1
28	3	PADZZ	5307-00-226-3505	51547	1-080-285-01B	.STUD,STEPPED 0.012 IN.OVERSIZE..........................	EA	1
28	4	PADZZ	5307-00-775-7256	51547	1-080-283-01A	.STUD,STEPPED 0.003 IN.OVERSIZE..........................	EA	1
28	4	PADZZ	5307-00-775-7255	51547	1-080-283-01B	.STUD,STEPPED 0.007 IN.OVERSIZE..........................	EA	1
28	4	PADZZ	5307-00-088-0562	51547	1-080-283-01B	.STUD,STEPPED 0.012 IN.OVERSIZE..........................	EA	1
28	5	PADZZ	5315-00-058-6075	96906	MS9047-100	.PIN,SPRING..........................	EA	1
28	6	PADZZ	5315-00-834-3865	51547	1-080-086-01	.PIN,STRAIGHT,HEADLE..........................	EA	2
28	7	PADZZ	3130-00-656-8544	51547	1-080-031-01	.LINER,BEARING HOUSI..........................	EA	2
28	8	PADZZ	3130-00-656-8545	51547	1-080-032-01	.LINER,BEARING HOUSI..........................	EA	1
28	9	PADZZ	5340-00-557-3302	96906	MS21208F1-15	.INSERT,SCREW THREAD..........................	EA	15
28	10	XADZZ		51547	1-080-264-13	.COVER ASSEMBLY,GEAR..........................	EA	1
28	11	PADDD	2840-00-587-3422	51547	1-080-340-09	HOUSING,GEARBOX,TUR SEE FIG.27 FOR NHA..........................	EA	1
28	12	PADZZ	2840-00-531-6270	51547	1-080-097-01	.LINER,PINION,OUTER..........................	EA	1
28	13	XBDZZ	5307-00-655-7209	51547	STD3CC1815A	.STUD,STEPPED 0.003 IN.OVERSIZE..........................	EA	1
28	13	XBDZZ	5307-00-655-7156	51547	STD3CC1815B	.STUD,STEPPED 0.007 IN.OVERSIZE..........................	EA	1
28	14	PADZZ	5307-00-474-8480	51547	1-080-284-01A	.STUD,RECESSED AND S 0.003 IN.OVERSIZE..........................	EA	1
28	14	PADZZ	5307-00-475-5621	51547	1-080-284-01B	.STUD,RECESSED AND S..........................	EA	1
28	14	PADZZ	5307-00-051-5781	51547	1-080-284-01B	.STUD,RECESSED AND S 0.012 IN.OVERSIZE..........................	EA	1
28	15	PADZZ	5315-00-834-3865	51547	1-080-086-01	.PIN,STRAIGHT,HEADLE..........................	EA	12
28	16	PADZZ	3130-00-656-8546	51547	1-080-034-01	.LINER,BEARING HOUSI..........................	EA	1
28	17	PADZZ	5310-00-656-8547	51547	1-080-077-01	.WASHER,RECESSED..........................	EA	2
28	18	PADZZ	5340-00-251-3453	96906	MS21208F6-10	.INSERT,SCREW THREAD..........................	EA	2
28	19	PADZZ	5340-00-250-4457	96906	MS124736	.INSERT,SCREW THREAD..........................	EA	11
28	20	PADZZ	5340-00-250-4501	96906	MS124816	.INSERT,SCREW THREAD..........................	EA	1
28	21	XADZZ		51547	1-080-265-15	.HOUSING..........................	EA	1

best copy available

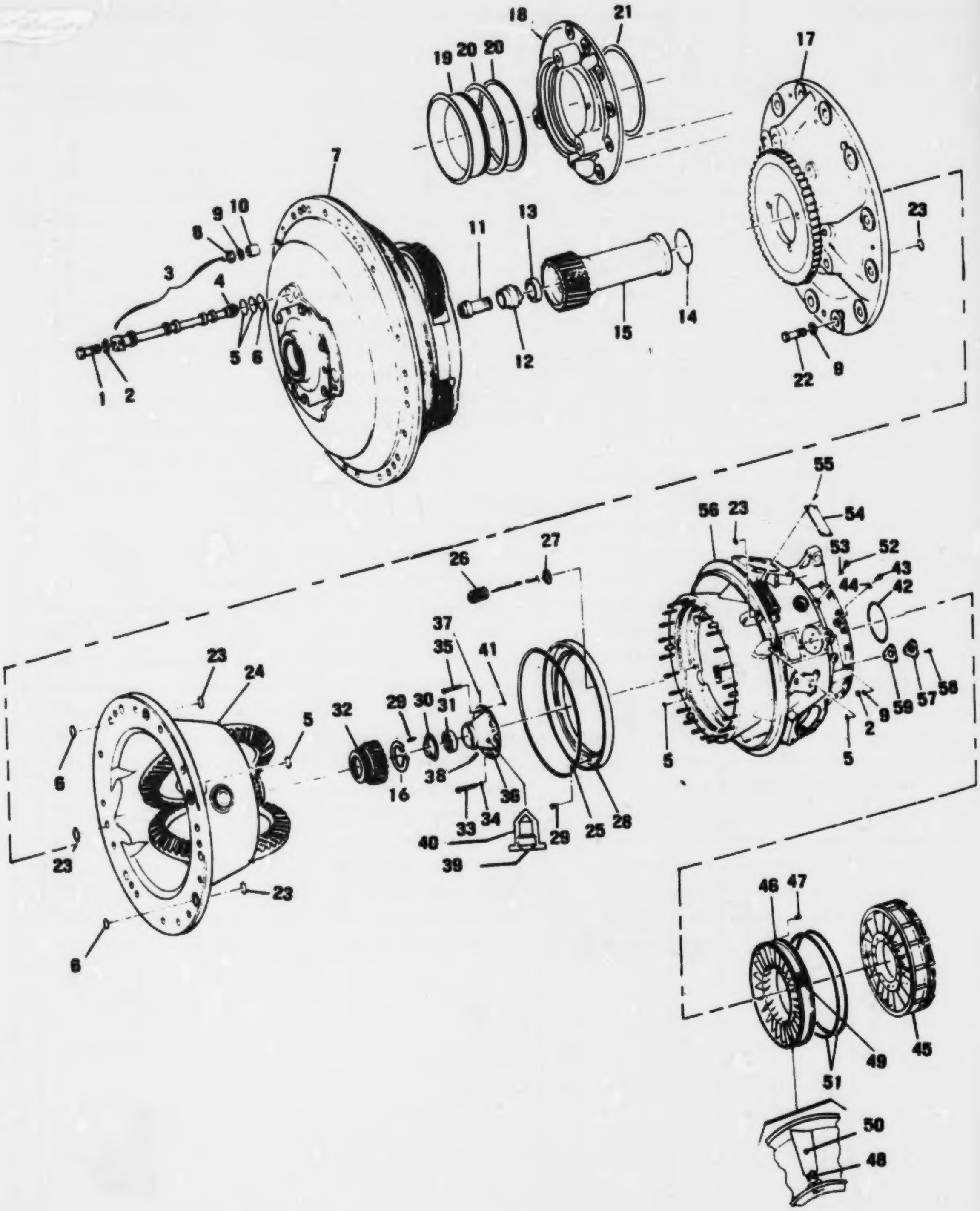

Figure 29. Output Reduction Carrier and Gear Assembly, Inlet Housing and Related Pa

(1) ILLUSTRATION (a) FIG NO	(b) ITEM NO	(2) SMR CODE	(3) NATIONAL STOCK NUMBER	(4) FSCM	(5) PART NUMBER	(6) DESCRIPTION USABLE ON CODE	(7) U/M	(8) QTY INC IN UNIT
						GROUP 0405 OUTPUT REDUCTION CARRIER AND GEAR ASSEMBLY, INLET HOUSING AND RELATED PARTS		
25	1	PAOZZ	5306-00-281-9947	88044	AN104739	BOLT,MACHINE....................F76,F77	EA	3
25	1	PAOZZ	5306-00-079-9961	96906	MS9490-09	BOLT,MACHINE....................F71	EA	3
25	2	PAOZZ	5310-00-658-5299	91547	STD3023K2	WASHER,KEY....................	EA	3
25	3	PAOFF	2840-00-924-3434	91547	1-030-330-03	TUBE,OIL TRANSFER....................	EA	3
25	4	PAOZZ	2840-00-735-6527	91547	1-030-280-01	.STRAINER ASSY,OIL....................	EA	1
25	5	PCOZZ	5330-00-725-5254	96906	MS29561-014	PACKING,PREFORME....................	EA	8
25	6	PCOZZ	5330-00-805-4365	96906	MS29561-013	PACKING,PREFORME....................	EA	8
25	7	AOFOO		91547	1-030-350-08	CARRIER AND GEAR AS SEE FIG.30 FOR BREAKDOWN....................	EA	1
25	8	PAFZZ	5310-00-807-1468	96906	MS21042-4	NUT,SELF-LOCKING,EX....................	EA	48
25	9	PAFZZ	5310-00-141-1795	88044	AN960-416	WASHER,FLAT....................	EA	70
25	10	PAFZZ	5365-00-784-3554	91547	1-030-069-01	SPACER,SLEEVE....................	EA	24
25	11	PAFZZ	2840-00-735-6522	91547	1-030-139-02	BOLT,RETAINER,SUN G....................	EA	1
25	12	PAFZZ	2840-00-084-7761	91547	1-030-141-03	RETAINER,BOLT,SUN G....................	EA	1
25	13	PAFZZ	5310-00-613-7435	91547	1-030-138-04	WASHER,CONVEX....................	EA	1
25	14	PCFZZ	5330-00-079-2832	96906	MS29561-126	PACKING,PREFORME....................F76,F77	EA	1
25	14	PCFZZ	5330-00-061-2724	96906	MS29561-128	PACKING,PREFORME....................F71	EA	1
25	15	PAFZZ	3040-00-865-8080	91547	1-030-192-06	GEARSHAFT,HELICAL....................F76,F77	EA	1
25	15	PAFZZ	3040-00-878-5540	91547	1-030-192-04	GEARSHAFT,HELICAL....................F71	EA	1
25	16	PAOZZ	5365-00-810-7283	91547	1-100-346-01	RING,RETAINING....................F76,F77	EA	1
25	16	PAOZZ	5365-00-952-7570	91547	1-100-346-02	RING,RETAINING....................F71	EA	1
25	17	PAOOO	2840-00-515-5533	91547	1-030-400-01	SUPPORT,OIL TRANSFE....................	EA	1
25	18	PAOZZ	2840-00-516-2415	91547	1-030-213-01	.SUPPORT,OIL TRANSFE....................	EA	1
25	19	PAOZZ	2840-00-535-5552	91547	1-030-214-01	.SLEEVE,SEAL OIL TRA....................	EA	1
25	20	PCOZZ	5330-00-516-2408	91547	STD3019C166	.PACKING,PREFORME....................	EA	2
25	21	PAOZZ	5365-00-516-2351	91547	1-300-326-01	.RING,RETAINING....................	EA	1
25	22	PAOZZ	5306-00-263-8845	96906	MS9584-19	BOLT,MACHINE....................	EA	12
25	23	PCOZZ	5330-00-800-5180	96906	MS29561-015	PACKING,PREFORMED....................	EA	4
25	24	AOOOO		91547	1-070-220-03	CARRIER ASSEMBLY,AC SEE FIG.32 FOR BREAKDOWN....................	EA	1
25	25	PAFZZ	5330-00-766-8853	91547	1-020-017-01	PACKING,PREFORMED....................	EA	1
25	26	PAFZZ	2840-00-876-8715	91547	1-030-040-08	VALVE ASSEMBLY,TORQ....................	EA	1
25	27	PAFZZ	5365-00-655-8155	91547	1-030-073-01	SHIM....................	EA	1
25	28	PAFZZ	2840-00-577-1035	91547	1-060-121-03	CYLINDER,TORQUEMETE....................	EA	15
25	29	PAFZZ	5306-00-281-9942	88044	AN107406	BOLT,MACHINE....................F76,F77	EA	12
25	29	PAFZZ	5306-00-225-0355	96906	MS9584-06	BOLT,MACHINE....................F71	EA	15
25	30	PAOZZ	2840-00-515-5513	91547	1-100-331-13	PLATE,CLAMPING,REAR....................F76,F77	EA	1
25	31	PAOZZ	2840-00-515-5512	91547	1-100-331-14	PLATE,CLAMPING,REAR....................F76,F77	EA	1
25	32	PAOZZ	2840-00-515-5511	91547	1-100-331-15	PLATE,CLAMPING,REAR....................F76,F77	EA	1

(1) ILLUSTRATION (a) FIG NO.	(b) ITEM NO	(2) SMR CODE	(3) NATIONAL STOCK NUMBER	(4) FSCM	(5) PART NUMBER	(6) DESCRIPTION USABLE ON CODE	(7) U/M	(8) QTY INC IN UNIT
29	30	PADZZ	2840-00-515-5510	91547	1-130-331-16	PLATE,CLAMPING,REAR.....................................F76,F77	EA	
29	30	PADZZ	2840-00-515-5509	91547	1-130-331-17	PLATE,CLAMPING,REAR.....................................F76,F77	EA	
29	30	PADZZ	2840-00-545-7805	91547	1-060-082-01	PLATE,LOCKING,POWER 0.1137 TO 0.1149 IN.THK..........F71	EA	
29	30	PADZZ	2840-00-545-5601	91547	1-060-082-02	PLATE,LOCKING,POWER 0.1150 TO 0.1163 IN.THK..........F71	EA	
29	30	PADZZ	2840-00-545-8056	91547	1-060-082-03	PLATE,LOCKING,POWER 0.1164 TO 0.1176 IN.THK..........F71	EA	
29	30	PADZZ	2840-00-545-8055	91547	1-060-082-04	PLATE,LOCKING,POWER 0.1177 TO 0.1190 IN.THK..........F71	EA	
29	30	PADZZ	2840-00-545-4532	91547	1-060-082-05	PLATE,LOCKING,POWER 0.1191 TO 0.1203 IN.THK..........F71	EA	
29	31	PADDD	3110-00-727-7107	91547	1-300-016	BEARING,ROLLER,CYLI.....................................F76,F77	EA	
29	31	PADZZ	3110-00-858-5652	91547	1-300-082	BEARING,ROLLER,CYLI.....................................F71	EA	
29	32	PAFZZ	3020-00-545-5016	91547	1-070-072-02	GEAR,SPUR...F76,F77	EA	
29	32	PAFZZ	3020-00-545-4562	91547	1-070-072-03	GEAR,SPUR...F71	EA	
29	33	XDDZZ	5306-00-514-8130	88044	AN104728	BOLT,MACHINE..F76,F77	EA	
29	33	PADZZ	5306-00-400-0048	96906	MS9490-28	BOLT,MACHINE..F71	EA	
29	34	PADZZ	5310-00-083-8364	91547	STD3018K11	WASHER,KEY..	EA	
29	35	PADZZ	5305-00-879-1447	91547	STD3022-123	SCREW,CAP,SOCKET HE...	EA	
29	36	PADZZ	2840-00-575-0254	91547	1-060-090-03	RETAINER ASSEMBLY,B.....................................F71	EA	
29	36	PADDD	2840-00-763-7603	91547	1-060-080-03	RETAINER,BEARING..F76,F77	EA	
29	37	XDDZZ	5315-00-835-1640	96906	MS9486-47	.PIN,STRAIGHT,HEA.......................................F76,F77	EA	
29	38	XBDZZ	5315-00-991-7011	96906	MS9486-51	.PIN,STRAIGHT,HEA.......................................F76,F77	EA	
29	39	PADZZ	2840-00-247-0263	91547	1-060-152-02	.PLUG,FITTING-BEARIN....................................F76,F77	EA	
29	40	PADZZ	2840-00-130-5560	91547	1-060-153-01	.FITTING,BEARING RET....................................F76,F77	EA	
29	41	PCDZZ	5330-00-542-1420	96906	MS29561-010	PACKING,PREFORME..	EA	
29	42	PADZZ	5330-00-165-1936	81349	M83248-1-159	PACKING,PREFORMED.................................F77,F71	EA	
29	43	PADZZ	5306-00-660-2868	91547	1-060-002-01	BOLT,MACHINE..F76,F77	EA	
29	44	PADZZ	5310-00-167-0836	88044	AN960-516L	WASHER,FLAT...F76,F77	EA	
29	45	PBDDD	2840-00-526-3626	91547	1-060-270-05	VANE ASSEMBLY,STATO SEE FIG.31 FOR BREAKDOWN.........F71	EA	
29	46	PADDD	2840-00-870-2817	91547	1-060-010-01	VANE,AIR INLET..F76,F77	EA	
29	47	PADZZ	5305-00-638-0359	88044	AN565A1032H2	.SETSCREW...F76,F77	EA	
29	48	PADZZ	2840-00-753-7255	91547	1-060-019-01	.DEFLECTOR,AIR,INLET....................................F76,F77	EA	
29	49	PADZZ	2840-00-753-7256	91547	1-060-040-02	.RING MOUNTING,AIR D....................................F76,F77	EA	
29	50	PADZZ	2840-00-012-3283	91547	1-060-030-01	.VANE,INLET GUIDE.......................................F76,F77	EA	
29	51	PADZZ	5330-00-815-1591	91547	1-060-003-01	PACKING,PREFORME..	EA	
29	52	PAFZZ	5365-00-285-3073	96906	MS9015-02	PLUG,MACHINE THREAD...	EA	
29	53	PCFZZ	5330-00-258-4525	96906	MS29512-02	PACKING,PREFORMED...	EA	
29	54	PAFZZ	9905-00-778-8847	91547	1-060-027-06	PLATE,IDENTIFICATIO...	EA	
29	55	PAFZZ	5305-00-253-5612	96906	MS21318-15	SCREW,DRIVE...	EA	
29	56	PADDD	2840-00-785-7805	91547	1-060-100-07	HOUSING,REDUCTION G SEE FIG.7 FOR BREAKDOWN..........F76,F77	EA	
29	56	PADDD	2840-00-525-4186	91547	1-060-220-03	HOUSING,REDUCTION G SEE FIG.7 FOR BREAKDOWN..........F71	EA	
29	57	PADZZ	2840-00-533-3810	91547	1-160-292-01	.RETAINER,LINER,REAR..	EA	
29	58	PADZZ	5305-00-252-5258	88044	AN148556	.SCREW,CAP,SOCKET HE..	EA	
29	59	PADZZ	5365-00-830-4297	91547	1-160-409-01	.SHIM...	EA	1

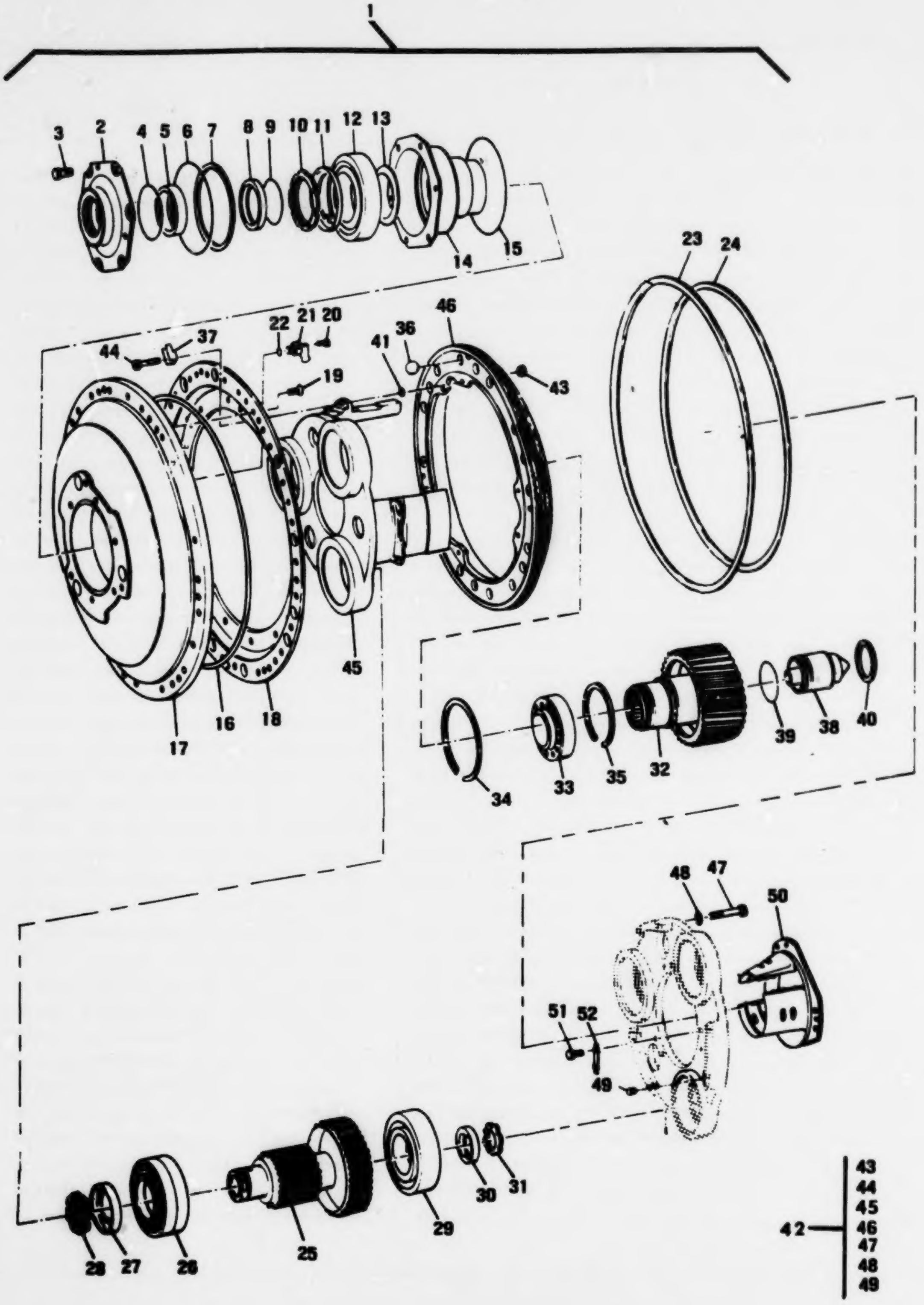

Figure 30. Carrier and Gear Assembly

(1) ILLUSTRATION (a) FIG NO	(b) ITEM NO	(2) SMR CODE	(3) NATIONAL STOCK NUMBER	(4) FSCM	(5) PART NUMBER	(6) DESCRIPTION USABLE ON CODE	(7) U/M	(8) QTY INC IN UNIT
						GROUP 0405 CARRIER AND GEAR ASSEMBLY		
30	1	AOFDD		51547	1-030-350-08	CARRIER AND GEAR AS SEE FIG.29 FOR BKD	EA	1
30	2	PAOZZ	2840-00-523-4079	51547	1-030-229-01	.RETAINER,OIL SEAL,O F76	EA	1
30	2	PAOZZ	2840-00-545-0209	51547	1-030-229-03	.RETAINER,OIL SEAL F77,F7L	EA	1
30	3	PAOZZ	5305-00-206-6814	88044	AN106508	.SCREW,CAP,HEXAGO	EA	6
30	4	PAOZZ	5330-00-420-5788	96906	MS9388-141	.PACKING,PREFORME F76	EA	1
30	4	PAOZZ	5330-00-167-5126	81349	M83248-1-144	.PACKING F77,F7L	EA	1
30	5	PAOZZ	5330-00-658-2089	51547	1-300-236	.SEAL,PLAIN ENCASED F76	EA	1
30	5	PAOZZ	5330-00-410-8153	51547	1-300-334-02	.SEAL,PLAIN ENCASED F77,F7L	EA	1
30	6	PAOZZ	5330-00-111-3313	96906	MS9388-045	.PACKING,PREFORME	EA	1
30	7	PAFZZ	5365-00-516-2424	51547	1-030-212-01	.SPACER,RING 0.035 TO 0.037 IN.THK	EA	1
30	7	PAFZZ	5365-00-516-2425	51547	1-030-212-02	.SPACER,RING 0.038 TO 0.040 IN.THK	EA	1
30	7	PAFZZ	5365-00-516-2427	51547	1-030-212-03	.SPACER,RING 0.041 TO 0.043 IN.THK	EA	1
30	7	PAFZZ	5365-00-761-3647	51547	1-030-212-04	.SPACER,RING 0.044 TO 0.046 IN.THK	EA	1
30	8	PAOZZ	2840-00-656-8920	51547	1-030-067-01	.PLATE,FACE,RING GEA F76	EA	1
30	8	PAOZZ	2840-00-524-3645	51547	1-030-067-02	.PLATE,OUTPUT GEARSH F77,F7L	EA	1
30	9	PAFZZ	5330-01-009-0908	81349	M83248/1-135	.PACKING,PREFORMED	EA	1
30	10	PAOZZ	5310-00-844-7565	51547	1-030-023-02	.NUT,PLAIN,ROUND	EA	1
30	11	PAOZZ	2840-00-545-4771	51547	1-030-165-02	.CUP,BEARING RETAINI F76	EA	1
30	11	PAOZZ	2840-00-545-0208	51547	1-030-165-03	.CUP,BEARING RETAINI F77,F7L	EA	1
30	12	PAOZZ	3110-00-537-1182	51547	1-300-329	.BEARING,BALL,ANNULA	EA	1
30	13	PAOZZ	5365-00-515-5567	51547	1-030-217-01	.SPACER,RING	EA	1
30	14	PAOZZ	2840-00-515-5554	51547	1-030-187-03	.LINER,BEARING SUPPO	EA	1
30	15	PCOZZ	5330-00-516-2407	51547	5TC3019062	.PACKING,PREFORME	EA	1
30	16	PAFZZ	5330-00-766-8853	51547	1-020-017-01	.PACKING,PREFORMED	EA	2
30	17	PAOZZ	2840-00-554-6117	51547	1-030-390-05	.HOUSING,REDUCTION G	EA	1
30	18	PAOZZ	2840-00-854-6531	51547	1-030-240-02	.PLATE ASSEMBLY,TORQ	EA	1
30	19	PAFZZ	5305-00-071-1320	96906	MS51960-63	.SCREW,MACHINE	EA	3
30	20	PAOZZ	5306-00-282-6627	88044	AN106408	.BOLT,MACHINE	EA	2
30	21	PAOZZ	2840-00-554-6155	51547	1-030-460-01	.FITTING ASSEMBLY,FR	EA	1
30	22	PCOZZ	5330-00-580-9535	96906	MS29561-009	.PACKING,PREFORMED	EA	1
30	23	PAFZZ	2840-00-062-4405	51547	1-020-154-01	.SEAL RING,METAL	EA	2
30	24	PAFZZ	2840-00-062-4406	51547	1-020-155-01	.SEAL RING,METAL	EA	2
30	25	PAOZZ	3040-00-515-5553	51547	1-030-193-01	.GEARSHAFT,HELICAL	EA	3
30	26	PAOZZ	3110-00-545-7566	51547	1-300-031	.BEARING,ROLLER,CYLI	EA	3
30	27	PAOZZ	2840-00-544-4652	51547	1-030-195-01	.CUP, GEARSHAFT BEAR	EA	3
30	28	PAOZZ	5310-00-516-2419	51547	1-030-194-02	.NUT,PLAIN,ROUND	EA	3
30	29	PAOOD	3110-00-766-8376	51547	1-300-032	.BEARING,ROLLER,CYLI	EA	3
30	30	PAOZZ	2840-00-544-4653	51547	1-030-211-01	.CUP, BEARING RETAIN	EA	3
30	31	PAOZZ	5310-00-515-7552	96906	MS172241	.NUT,PLAIN,ROUND	EA	3

(1) ILLUSTRATION (a) FIG NO	(b) ITEM NO	(2) SMR CODE	(3) NATIONAL STOCK NUMBER	(4) FSCM	(5) PART NUMBER	(6) DESCRIPTION USABLE ON CODE	(7) U/M
30	32	PADZZ	3040-00-865-8052	51547	1-030-191-06	.GEARSHAFT,HELICAL	EA
30	33	PADZZ	3110-00-554-5163	51547	1-300-335	.BEARING,ROLLER,CYLI	EA
30	34	PADZZ	5365-00-550-2746	51547	1-300-337-01	.RING,RETAINING	EA
30	35	PADZZ	5365-00-552-7451	51547	1-300-339-01	.RING,RETAINING	EA
30	36	PADZZ	3110-00-780-2720	51547	1-020-015-01	.BALL,TORQUEMETER	EA
30	37	PADZZ	2840-00-535-7718	51547	1-030-185-01	.CLAMP,PLATE ASSEMBL	EA
30	38	PAFZZ	2840-00-457-1575	51547	1-030-234-02	.PLUG,OUTPUT GEARSHA E76	EA
30	38	PAFZZ	2840-00-408-5146	51547	1-030-234-01	.PLUG ASSY,OUTPUT GE E77,E71	EA
30	39	PCFZZ	5330-00-618-2518	96906	MS29561-222	..PACKING,PREFORMED	EA
30	40	XDDZZ	5365-00-517-7135	51547	1-300-201-01	.RING,RETAINING	EA
30	41	PADZZ	5365-00-543-1290	51547	STD30338101	.RING,RETAINING	EA
30	42	PADDD	2840-00-554-6142	51547	1-030-340-04	.CARRIER ASSEMBLY,PL	EA
30	43	PAFZZ	5310-00-848-1658	51547	1-030-129-01	..NUT,PLAIN,SLOTTED,H	EA
30	44	PAFZZ	5306-00-547-3552	51547	1-030-203-01	..BOLT,MACHINE	EA
30	45	XADZZ		51547	1-030-182-03	..CARRIER,PLANETARY	EA
30	46	XADZZ		51547	1-030-183-03	..PLATE,TORQUEMETER,R	EA
30	47	PADZZ	5306-00-550-5251	88044	AN107520	..BOLT,MACHINE	EA
30	48	PAFZZ	5310-00-167-0814	88044	AN960C516L	..WASHER,FLAT	EA
30	49	PAFZZ	5315-00-852-7430	51547	1-030-172-01	.PIN,STRAIGHT,HEADLE	EA
30	50	PADZZ	2840-00-554-6185	51547	1-030-450-02	.DEFLECTOR ASSY,OIL	EA
30	51	PADZZ	5306-00-281-5545	88044	AN104706	.BOLT,MACHINE	EA
30	52	PADZZ	5310-00-517-7140	51547	1-100-069-01	.WASHER,KEY	EA
30		PAFZZ	2840-00-552-4622	51547	1-230-020-29	INSPECTION KIT,RECU SEE FUNCTIONAL GROUP 9C FOR COMPONENTS.. E76,E77	EA

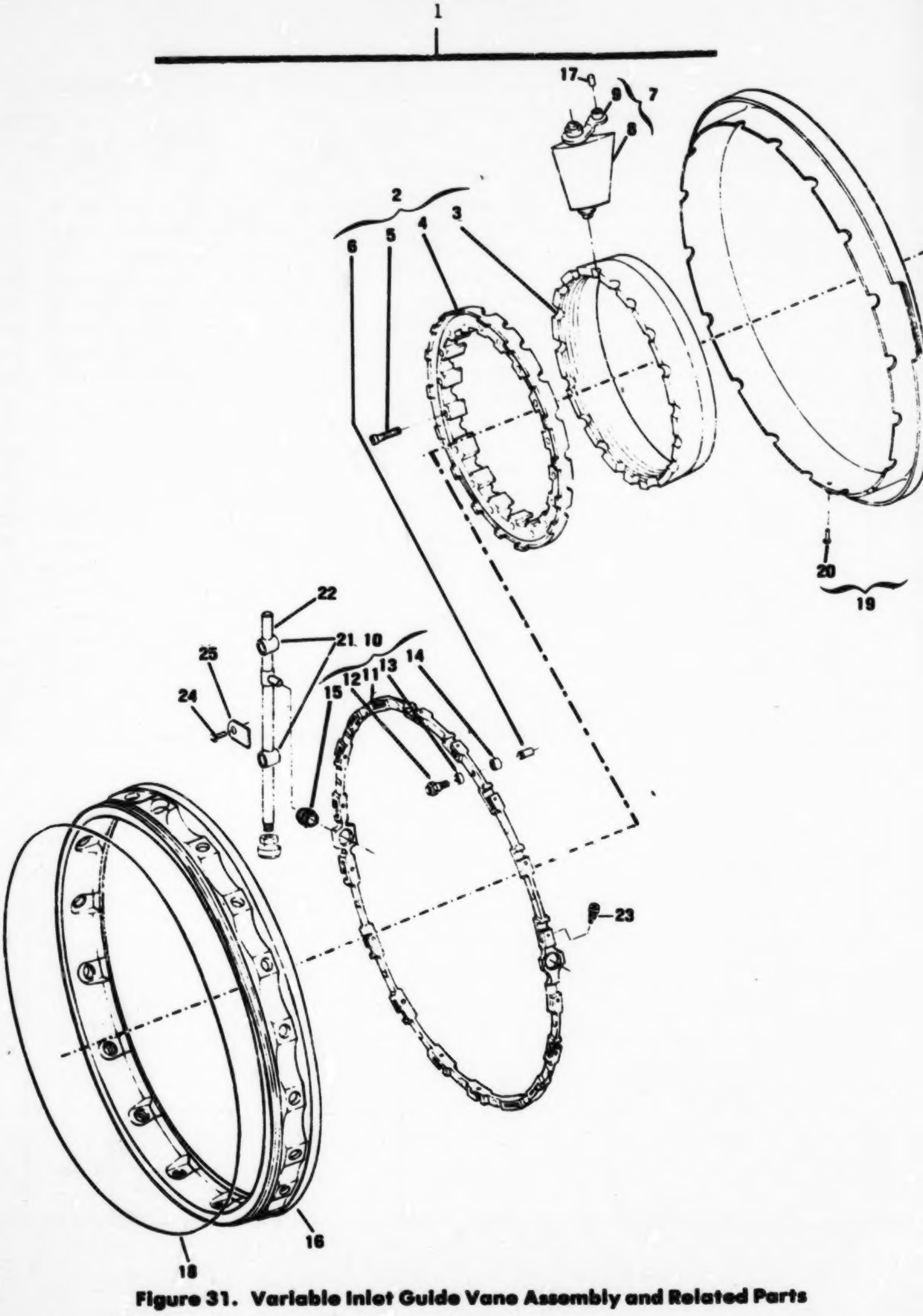

Figure 31. Variable Inlet Guide Vane Assembly and Related Parts

(1) ILLUSTRATION (a) FIG NO	(b) ITEM NO	(2) SMR CODE	(3) NATIONAL STOCK NUMBER	(4) FSCM	(5) PART NUMBER	(6) DESCRIPTION USABLE ON CODE	(7) U/M	(8) QTY INC IN UNIT
						GROUP 0405 VARIABLE INLET GUIDE VANE ASSEMBLY AND RELATED PARTS (T53-L-13B)		
31	1	PBODD	2840-00-524-3626	51547	1-C6C-270-05	VANE ASSEMBLY,STATO SEE FIG.29 FOR NHA..........F7L	EA	1
31	2	PBODD	2840-00-553-6634	51547	1-C6C-250-03	.FAIRING ASSEMBLY,IN..........F7L	EA	1
31	3	XADZZ		51547	1-C6C-091-04	..FAIRING,INNER FORWA..........F7L	EA	1
31	4	XADZZ		51547	1-C6C-092-03	..FAIRING,INNER REAR..........F7L	EA	1
31	5	PADZZ	5305-00-545-3863	88044	AN500AC5-8	..SCREW,MACHINE..........F7L	EA	17
31	6	XADZZ		51547	1-C6C-099-02	..PIN,STRAIGHT,HEADLE..........F7L	EA	1
31	7	PADZZ	2840-00-557-2536	51547	1-C6C-260-07	.VANE,COMPRESSOR STA..........F7L	EA	18
31	8	XADZZ		51547	1-C6C-330-03	..VANE,INLET..........F7L	EA	1
31	9	XADZZ		51547	1-300-123	..BEARING AND LEVER ASSEMBLY..........F7L	EA	1
31	10	PADDD	2840-00-545-5617	51547	1-C6C-340-01	.UNISON RING ASSEMBL..........F7L	EA	1
31	11	XADZZ		51547	1-C6C-093-03	..UNISON RING,VARIABL..........F7L	EA	1
31	12	PADZZ	5305-00-552-7403	51547	1-C6C-095-01	..SCREW,SHOULDER..........F7L	EA	17
31	13	PADZZ	2840-00-525-2576	51547	1-C6C-096-02	..ROLLER,UNISON RING..........F7L	EA	17
31	14	PADZZ	5310-00-513-4026	51547	1-C6C-097-01	..ROLLER NUT,UNISON R..........F7L	EA	17
31	15	PADZZ	3120-00-511-5164	51547	1-300-116	..BEARING,PLAIN,SELF-..........F7L	EA	1
31	16	PADZZ	2840-00-524-7626	51547	1-C6C-088-03	.FAIRING,INLET GUIDE..........F7L	EA	1
31	17	PADZZ	5315-00-514-6505	51547	STD3059-062	.PIN,SPRING..........F7L	EA	18
31	18	PADZZ	5330-00-815-1551	51547	1-C6C-003-01	PACKING,PREFORME..........F7L	EA	1
31	19	PADZZ	2840-00-524-8007	51547	1-C6C-310-01	FAIRING ASSEMBLY,OU..........F7L	EA	1
31	20	PADZZ	5315-00-760-6215	51547	1-C6C-139-01	.PIN,STRAIGHT,HEADED..........F7L	EA	1
31	21	PADZZ	2840-00-524-8003	51547	1-C6C-135-02	GUIDE,ACTUATOR ROD..........F7L	EA	2
31	22	PADZZ	2840-00-557-6564	51547	1-C6C-300-03	CONNECTOR ASSEMBLY,..........F7L	EA	1
31	23	PADZZ	5305-00-506-5765	51547	1-C6C-142-01	SETSCREW..........F7L	EA	1
31	24	PADZZ	5305-00-761-5662	96906	MS24693C269	SCREW,MACHINE..........F7L	EA	1
31	25	PADZZ	2840-00-554-5850	51547	1-C6C-151-01	PLATE,SETTING,VANE..........F7L	EA	1

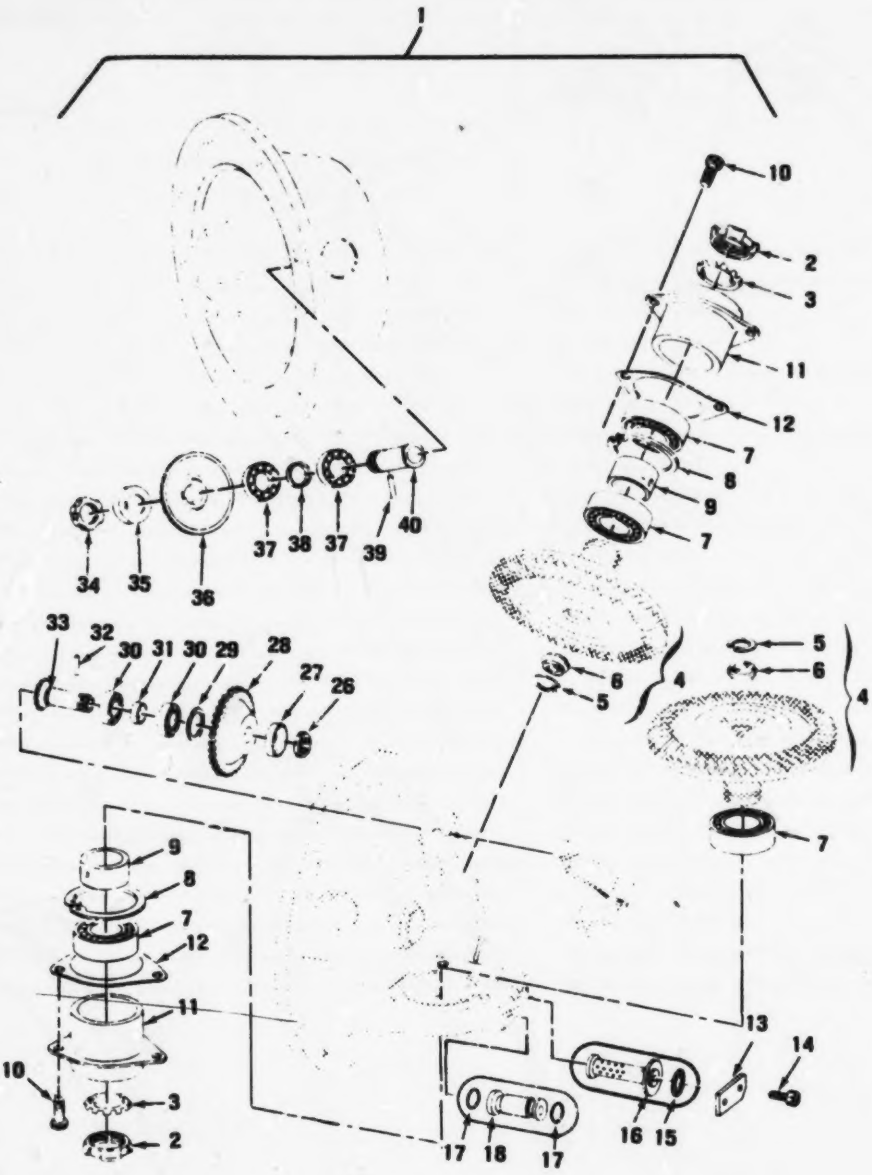

Figure 32. Accessory Drive Carrier Assembly (Sheet 1 of 2)

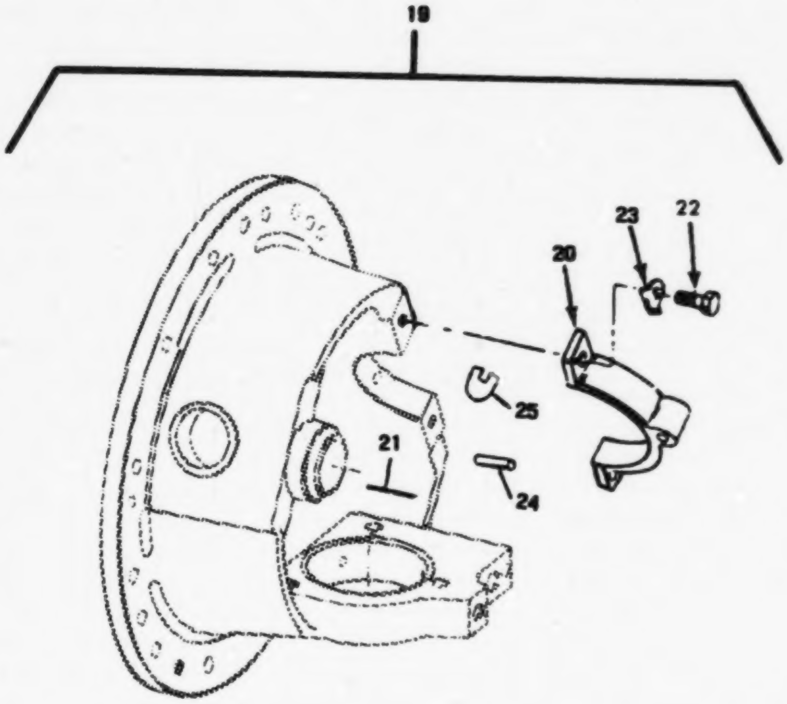

Figure 32. Accessory Drive Carrier Assembly (Sheet 2 of 2)

(1) ILLUSTRATION (a) FIG NO	(b) ITEM NO	(2) SMR CODE	(3) NATIONAL STOCK NUMBER	(4) FSCM	(5) PART NUMBER	(6) DESCRIPTION USABLE ON CODE	(7) U/M	(8) QTY INC IN UNIT
						GROUP 0405 ACCESSORY DRIVE CARRIER ASSEMBLY		
32	1	AOOOO		51547	1-070-220-03	CARRIER ASSEMBLY,AC SEE FIG.29 FOR NHA	EA	1
32	2	XBOZZ	5310-00-880-3225	51547	1-070-007-01	.NUT,PLAIN,ROUND	EA	2
32	3	PAOZZ	5310-00-754-3383	51547	1-070-006-01	.WASHER,KEY	EA	2
32	4	PAOOO	3040-00-788-8827	51547	1-070-140-01	.GEAR ASSEMBLY,BEVEL	EA	2
32	5	PAOZZ		96906	MS16625-3068	..RING,RETAINING	EA	2
32	6	PAOZZ	2840-00-658-8541	51547	1-070-011-01	..STOP,SHAFT,ACCESSOR	EA	2
32	7	PAOZZ	3110-00-676-8132	51547	1-300-001	.BEARING,BALL,ANNULA	EA	4
32	7	PAOZZ	3110-00-877-6163	51547	2-300-023	.BEARING,BALL,ANNULA	EA	4
32	8	PAOZZ	5365-00-547-5871	96906	MS16625-3181	.RING,RETAINING	EA	2
32	9	PAOZZ	5365-00-833-6652	51547	1-070-102-01	.SPACER,SLEEVE	EA	2
32	10	PAOZZ	5306-00-831-4081	51547	STD3053-25	.BOLT,MACHINE	EA	6
32	11	PAOZZ	2840-00-475-6551	51547	1-070-103-01	.HOUSING,ANTIFRICTIO	EA	2
32	12	PAOZZ	5365-00-445-6237	51547	1-070-002-01	.SHIM,BEARING LINER	EA	1
32	13	PAOZZ	2840-00-475-6580	51547	1-070-016-02	.COVER,STRAINER RETA	EA	1
32	14	PAOZZ	5305-00-521-5408	51547	1-070-073-01	.SCREW,CAP,SOCKET HE	EA	2
32	15	PCOZZ	5330-00-068-4362	96906	MS9241-012	.PACKING,PREFORMED	EA	1
32	16	PAOZZ	2945-00-658-7208	51547	1-070-021-01	.STRAINER ELEMENT,SE	EA	1
32	17	PCOZZ	5330-00-580-5527	96906	MS29561-008	.PACKING,PREFORME	EA	1
32	18	PAOZZ	2840-00-655-5818	51547	1-060-128-01	.TUBE,OIL TRANSFER,C	EA	
32	19	PAOZZ	2840-00-515-5558	51547	1-070-210-01	.CARRIER & CAP ASSY	EA	
32	20	PAOZZ	2840-00-488-7465	51547	1-070-057-01	..CAP,PILLOW BLOCK	EA	
32	21	PAOZZ	3120-00-403-2873	51547	1-070-056-01	..BUSHING,SLEEVE	EA	
32	21	PAOZZ	3120-00-442-6265	51547	1-070-059-01	..BUSHING,SLEEVE	EA	
32	22	PAOZZ	5306-00-831-4080	51547	STD3053-11	..BOLT,MACHINE	EA	
32	23	PAOZZ	5310-00-083-8364	51547	STD3018K11	..WASHER,KEY	EA	
32	24	PAOZZ	5315-00-808-0387	96906	MS9105-52	..PIN,STRAIGHT,HEA	EA	
32	24	PAOZZ	5315-00-276-0112	88044	AN122683	..PIN,STRAIGHT,HEA	EA	
32	25	PAOZZ	5365-00-087-7358	51547	1-070-023-01	..PLUG,MACHINE THREAD	EA	
32	26	PAOZZ	5310-00-835-3588	96906	MS172237	.NUT,PLAIN,ROUND	EA	
32	27	PAOZZ	5340-00-516-2592	51547	1-070-066-01	.RETAINER,NUT AND BO	EA	
32	28	PAOZZ	3020-00-453-5441	51547	1-070-062-04	.GEAR,SPUR	EA	
32	29	PAOZZ	5365-00-543-0505	51547	1-300-046-01	.RING,RETAINING	EA	
32	30	PAOZZ	3110-00-580-3288	51547	1-300-002	.BEARING,BALL,ANNULA	EA	
32	31	PAOZZ	5365-00-516-2435	51547	1-070-061-01	.SPACER,SLEEVE 0.200 TO 0.204 IN.THK	EA	
32	31	PAOZZ	5365-00-516-2436	51547	1-070-061-02	.SPACER,SLEEVE 0.205 TO 0.209 IN.THK	EA	
32	31	PAOZZ	5365-00-516-2437	51547	1-070-061-03	.SPACER,SLEEVE 0.210 TO 0.214 IN.THK	EA	
32	31	PAOZZ	5365-00-524-5447	51547	1-070-061-04	.SPACER,SLEEVE 0.215 TO 0.219 IN.THK	EA	
32	31	PAOZZ	5365-00-523-4426	51547	1-070-061-05	.SPACER,SLEEVE 0.220 TO 0.224 IN.THK	EA	

(1) ILLUSTRATION		(2)	(3)	(4)	(5)	(6)	(7)	(8)
(a) FIG NO	(b) ITEM NO	SMR CODE	NATIONAL STOCK NUMBER	FSCM	PART NUMBER	DESCRIPTION USABLE ON CODE	U/M	QTY INC IN UNIT
32	31	PADZZ	5365-00-543-2616	51547	1-070-061-06	.SPACER,SLEEVE 0.223 TO 0.227 IN.THK	EA	1
32	31	PADZZ	5365-00-523-4427	51547	1-070-061-07	.SPACER,SLEEVE 0.228 TO 0.232 IN.THK	EA	1
32	32	PADZZ	5315-00-812-0091	96906	MS9105-58	.PIN,STRAIGHT,HEAD	EA	1
32	33	PADZZ	3040-00-915-5559	51547	1-070-063-02	.GEARSHAFT,BEVEL	EA	1
32	34	PADZZ	5310-00-880-5871	96906	MS172238	.NUT,PLAIN,ROUND	EA	1
32	35	PADZZ	5340-00-916-2551	51547	1-070-065-01	.RETAINER,NUT AND BC	EA	1
32	36	PADZZ	3020-00-923-0561	51547	1-070-064-04	.GEAR,BEVEL	EA	1
32	37	PADZZ	3110-00-580-3253	51547	1-300-003	.BEARING,BALL,ANNULAR	EA	2
32	38	PADZZ	5365-00-947-3150	51547	1-070-059-01	.SPACER,RING 0.163 TO 0.164 IN.THK	EA	1
32	38	PADZZ	5365-00-916-2433	51547	1-070-059-02	.SPACER,RING 0.165 TO 0.169 IN.THK	EA	1
32	38	PADZZ	5365-00-916-2432	51547	1-070-059-03	.SPACER,RING 0.170 TO 0.174 IN.THK	EA	1
32	38	PADZZ	5365-00-361-4179	51547	1-070-059-04	.SPACER,SLEEVE 0.175 TO 0.179 IN.THK	EA	1
32	38	PADZZ	5365-00-916-2429	51547	1-070-059-05	.SPACER,SLEEVE 0.180 TO 0.184 IN.THK	EA	1
32	39	PADZZ	5315-00-916-2410	96906	MS9105-60	.PIN,STRAIGHT,HEAD	EA	1
32	40	PADZZ	3040-00-915-5552	51547	1-070-067-01	.GEARSHAFT,SPUR	EA	1

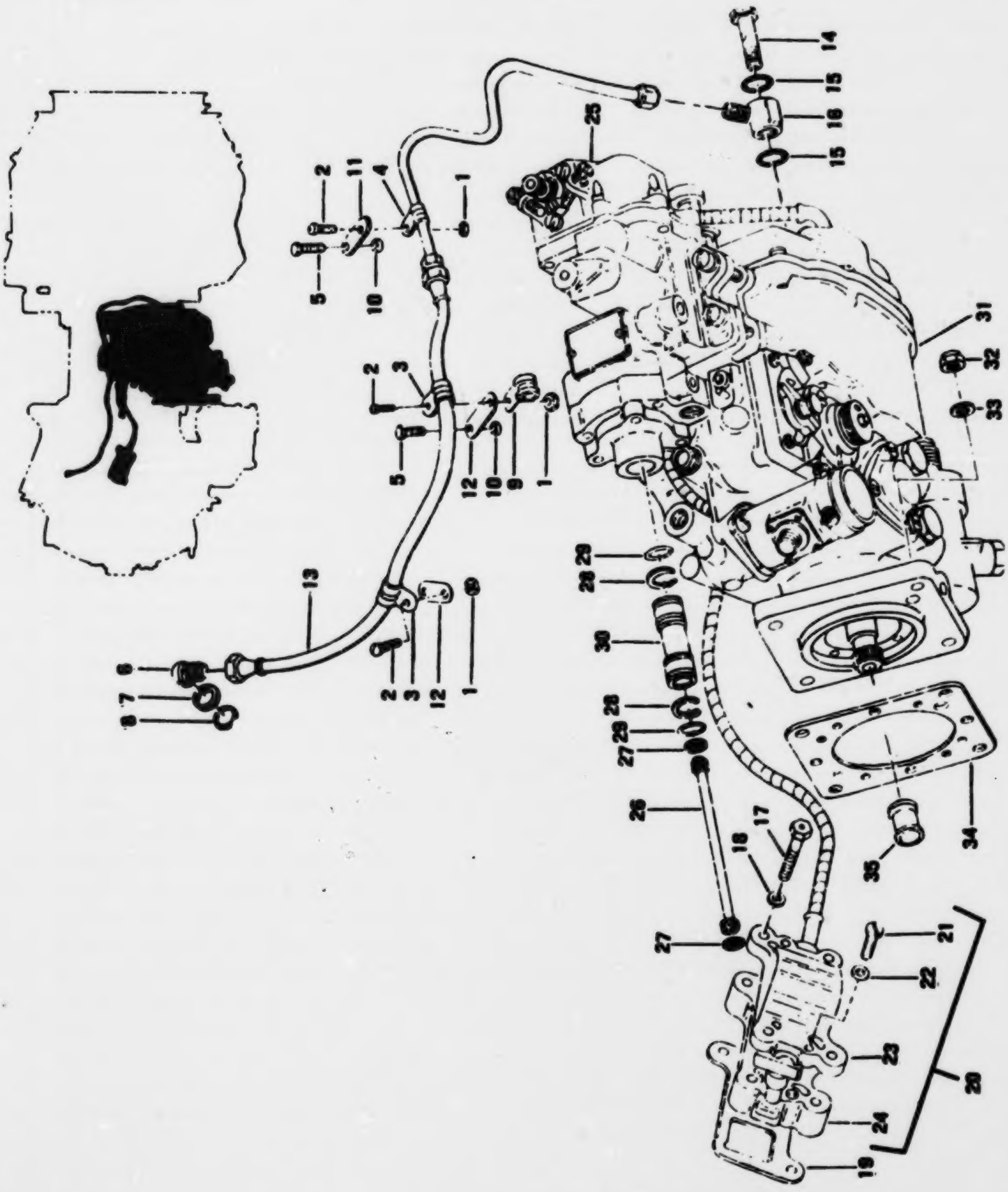

Figure 33. Fuel Control and Related Parts

(1) ILLUSTRATION (a) FIG NO	(b) ITEM NO	(2) SMR CODE	(3) NATIONAL STOCK NUMBER	(4) FSCM	(5) PART NUMBER	(6) DESCRIPTION USABLE ON CODE	(7) U/M	(8) QTY INC IN UNIT
						GROUP 0406 FUEL SYSTEM		
						FUEL CONTROL AND RELATED PARTS		
						(T53-L-11C,T53-L-11D)		
33	1	PAOZZ	5310-00-807-1467	96906	MS21042-3	NUT,SELF-LOCKING,EX....................F76,F77	EA	4
33	2	PAOZZ	5305-00-150-5212	88044	AN502-10-8	SCREW,MACHINE....................F76,F77	EA	4
33	3	PAOZZ	5340-00-533-3512	81956	EAB700-5	CLAMP,LOOP....................F76,F77	EA	4
33	4	PAOZZ	5340-00-533-3511	81956	EAB700-4	CLAMP,SUPPORT....................F76,F77	EA	2
33	5	PAOZZ	5306-00-282-0908	88044	AN101120	BOLT,MACHINE....................F76,F77	EA	4
33	6	PAOZZ	4730-00-729-4351	96906	MS24295D4	ELBOW,TUBE....................F76,F77	EA	2
33	7	PAOZZ	5310-00-282-7623	96906	MS24400D4	NUT,PLAIN,HEXAGON....................F76,F77	EA	2
33	8	PCOZZ	5330-00-263-8028	96906	MS29512-04	PACKING,PREFORMED....................F76,F77	EA	2
33	9	PAOZZ	5340-00-664-3052	96906	MS9024-03	CLAMP,LOOP....................F76,F77	EA	1
33	10	PAOZZ	5365-00-044-5434	51547	1-160-607-01	SPACER,SLEEVE....................F76,F77	EA	2
33	11	PAOZZ	2840-00-575-3745	51547	1-160-311-01	PLATE,MOUNTING STRA....................F76,F77	EA	1
33	12	PAOZZ	2840-00-575-3741	51547	1-160-309-01	PLATE,MOUNTING STRA....................F76,F77	EA	1
33	13	PAOZZ	2915-00-563-1109	51547	1-300-203	HOSE ASSEMBLY,COMPO....................F76,F77	EA	1
33	14	PAOZZ	4730-00-558-8195	51547	1-160-319-01	BOLT,FLUID PASSAGE....................F76,F77	EA	1
33	15	PAOZZ	5310-00-158-6676	88044	AN901-4A	WASHER,FLAT....................F76,F77	EA	2
33	16	PAOZZ	4730-00-278-5817	88044	AN777-4D	CONNECTOR,MULTIPLE....................F76,F77	EA	1
33	17	PAOZZ	5306-00-282-4129	88044	AN103722	BOLT,MACHINE....................F76,F77	EA	4
33	18	PAOZZ	5310-00-167-0834	88044	AN960-10L	WASHER,FLAT....................F77	EA	4
33	19	PAOZZ	5330-00-775-6523	51547	1-160-454-01	GASKET,TEMPERATURE....................F76,F77	EA	1
33	20	PAOOO	2840-00-594-4302	51547	1-160-040-03	HOUSING ASSY,TEMPER....................F76,F77	EA	1
33	21	PAOZZ	5305-00-271-7778	88044	AN503-8-10	.SCREW,MACHINE....................F76,F77	EA	2
33	22	PAOZZ	5310-00-685-3744	88044	AN960C8	.WASHER,FLAT....................F76,F77	EA	2
33	23	XAOZZ		51547	1-160-446-03	.HOUSING,UPPER TEMPE....................F76,F77	EA	1
33	24	XAOZZ		51547	1-170-120-01	.HOUSING,LOWER TEMPE....................F76,F77	EA	1
33	25	PAOOO	2915-00-594-2016	11599	8180081	GOVERNOR ASSEMBLY,O....................F76,F77	EA	1
33	26	PAOZZ	2840-00-775-6517	51547	1-160-444-01	SHAFT,OVERSPEED GOV....................F76,F77	EA	1
33	27	PAOZZ	2840-00-581-5570	51547	1-160-589-02	SPACER,OVERSPEED GO....................F76,F77	EA	1
33	28	PAOZZ	5365-00-777-8163	51547	STD3033015	RING,RETAINING....................F76,F77	EA	2
33	29	PCOZZ	5330-00-585-1045	96906	MS29561-113	PACKING,PREFORMED....................F76,F77	EA	2
33	30	PAOZZ	2840-00-775-6525	51547	1-160-464-01	TUBE,GOVERNOR SHAFT....................F76,F77	EA	1
33	31	PAOOO	2915-00-223-6555	11599	8173006	FUEL CONTROL,MAIN,T SEE FIG.34 FOR BREAKDOWN....................F76,F77	EA	1
33	32	PAOZZ	5310-00-807-1465	96906	MS21042-5	NUT,SELF-LOCKING,EX....................F76,F77	EA	4
33	33	PAOZZ	5310-00-167-0836	88044	AN960C-516L	WASHER,FLAT....................F76,F77	EA	4
33	34	PAOZZ	5330-00-656-8534	51547	1-080-025-01	GASKET,COVER,FUEL C....................F76,F77	EA	1
33	35	PAOZZ	2840-00-570-5811	51547	1-300-368-01	SEAL,TUBING,ENGINE....................F76,F77	EA	1

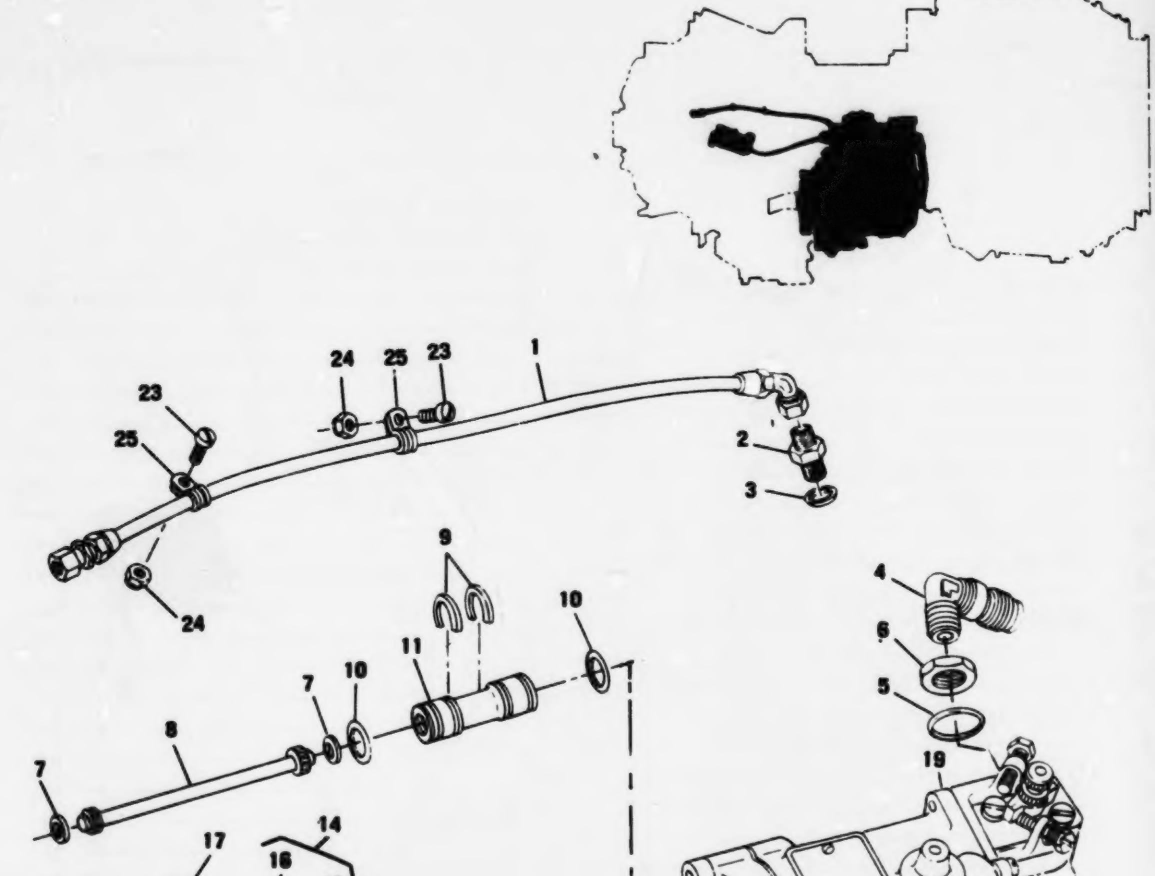

Figure 34. Fuel Control and Related Parts

(1) ILLUSTRATION		(2)	(3)	(4)	(5)	(6)		(7)	(8)
(a) FIG NO	(b) ITEM NO	SMR CODE	NATIONAL STOCK NUMBER	FSCM	PART NUMBER	DESCRIPTION	USABLE ON CODE	U/M	QTY INC IN UNIT
						GROUP 0406 FUEL CONTROL AND RELATED PARTS			
						(T53-L-13B)			
34	1	PAOZZ	4720-00-566-2235	51547	1-300-135	HOSE ASSEMBLY,NONME	FZL	EA	1
34	2	PAOZZ	4730-00-834-5560	96906	MS24392D4	NIPPLE,TUBE	FZL	EA	6
34	3	PAOZZ	5330-00-555-1048	51547	S1D3C17E4	PACKING,PREFORMED	FZL	EA	2
34	4	PAOZZ	4730-00-722-7214	96906	MS2439404	ELBOW,TUBE	FZL	EA	1
34	5	PCOZZ	5330-00-283-8028	96906	MS29512-04	PACKING,PREFORMED	FZL	EA	2
34	6	PAOZZ	5310-00-208-5765	88044	AN924-4	NUT,PLAIN,HEXAGON	FZL	EA	1
34	7	PAOZZ	2840-00-981-5570	51547	1-160-589-02	SPACER,OVERSPEED GO	FZL	EA	2
34	8	PAOZZ	2840-00-775-6517	51547	1-160-444-01	SHAFT,OVERSPEED GOV	FZL	EA	1
34	9	PAOZZ	5365-00-777-8163	51547	S1D3C33C15	RING,RETAINING	FZL	EA	2
34	10	PCOZZ	5330-00-585-1085	96906	MS29561-113	PACKING,PREFORMED	FZL	EA	2
34	11	PAOZZ	2840-00-775-6525	51547	1-160-464-01	TUBE,GOVERNOR SHAFT	FZL	EA	1
34	12	PAOZZ	5305-00-271-7778	88044	AN503-8-10	SCREW,MACHINE	FZL	EA	2
34	13	PAOZZ	5310-00-685-3344	88044	AN960C8	WASHER,FLAT	FZL	EA	2
34	14	PAOZZ	2840-00-994-4302	51547	1-160-040-03	HOUSING ASSY,TEMPER	FZL	EA	1
34	15	XAOZZ		51547	1-160-446-03	.HOUSING,UPPER TEMPE	FZL	EA	1
34	16	XAOZZ		51547	1-170-120-01	.HOUSING,LOWER TEMPE	FZL	EA	1
34	17	PAOZZ	5330-00-775-6523	51547	1-160-454-01	GASKET	FZL	EA	1
34	18	PAOZZ	5305-00-935-9172	96906	MS35275-287	SCREW,MACHINE	FZL	EA	2
34	19	PAOOO	2915-01-005-9196	11599	1C310C01	GOVERNOR OVERSPEED SEE FIG.35 FOR BREAKDOWN	FZL	EA	1
34	20	PAOOO	2915-01-005-9197	11599	100770A4	FUEL CONTROL,MAIN,T SEE FIG.36 FOR BREAKDOWN	BZL	EA	1
34	21	PAOZZ	2840-00-970-5811	51547	1-300-368-01	SEAL,TUBING,ENGINE	FZL	EA	1
34	22	PAOZZ	5330-00-658-8534	51547	1-090-025-01	GASKET,COVER,FUEL C	FZL	EA	1
34	23	PAOZZ	5305-00-145-0999	11599	72066	SCREW,MACHINE	FZL	EA	3
34	24	PAOZZ	5310-00-807-1467	96906	MS21042-3	NUT,SELF-LOCKING,EX	FZL	EA	3
34	25	PAOZZ	5340-00-533-3511	81996	EA870C-4	CLAMP,SUPPORT	FZL	EA	2
34	26	PAOZZ	5340-00-664-3052	96906	MS9324-03	CLAMP,LOOP	FZL	EA	1
34	27	PAOZZ	5306-00-282-4129	88044	AN103722	BOLT,MACHINE	FZL	EA	4
34	28	PAOZZ	5310-00-167-0834	88044	AN960C-10L	WASHER,FLAT	FZL	EA	4
34	29	PAOZZ	5310-00-807-1469	96906	MS21042-5	NUT,SELF-LOCKING,EX	FZL	EA	4
34	30	PAOZZ	5310-00-167-0836	88044	AN960C-516L	WASHER,FLAT	FZL	EA	4

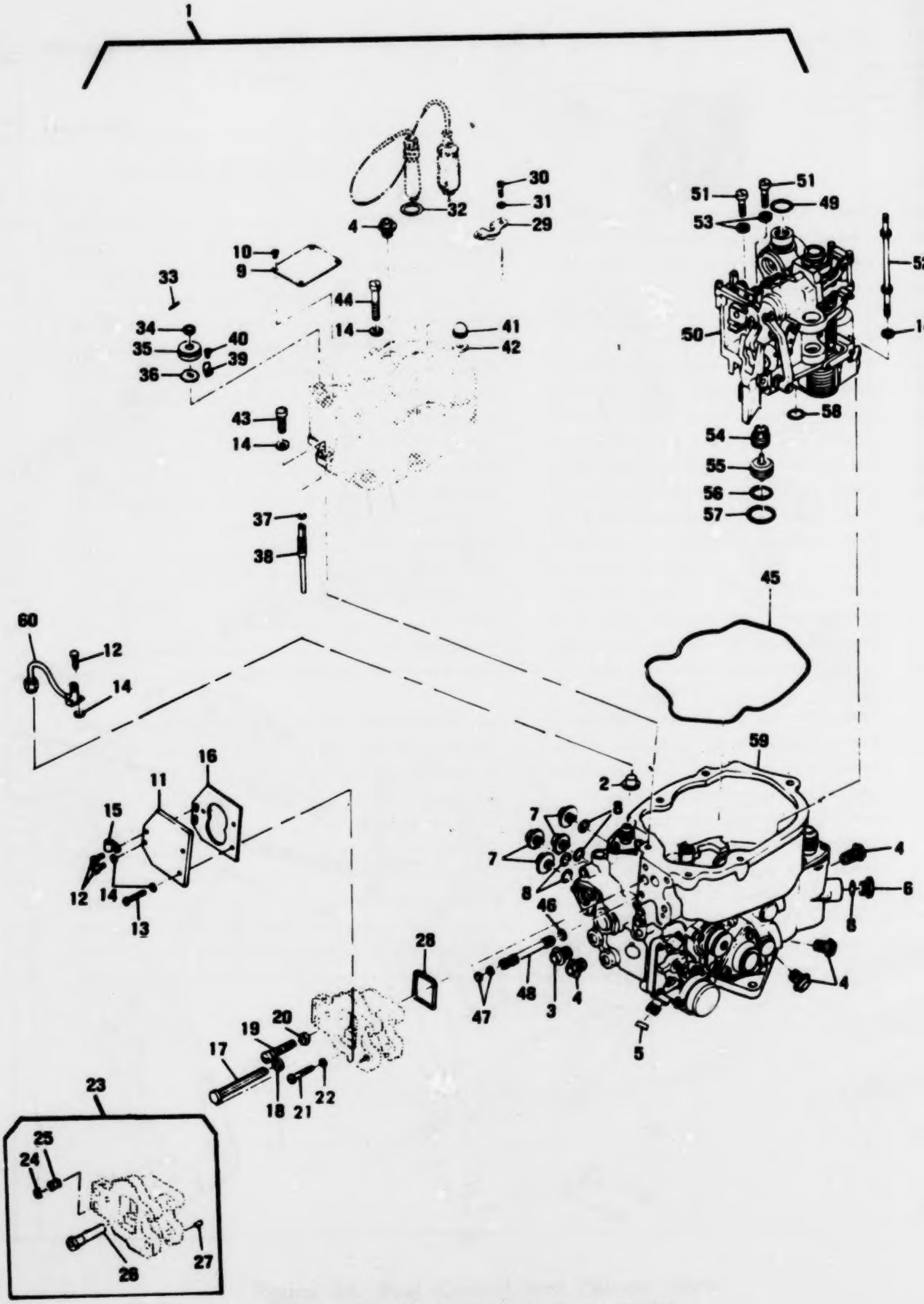

Figure 35. Fuel Control, Main Turbine

(1) ILLUSTRATION (a) FIG NO.	(b) ITEM NO.	(2) SMR CODE	(3) NATIONAL STOCK NUMBER	(4) FSCM	(5) PART NUMBER	(6) DESCRIPTION USABLE ON CODE	(7) U/M	(8) QTY INC IN UNIT
						GROUP 0406 FUEL CONTROL,MAIN TURBINE		
						(T53-L-11C,T53-L-11D)		
35	1	PAOOD	2915-00-223-6555	11599	6170006	FUEL CONTROL,MAIN,T SEE FIG.33 FOR NHA..............F76,F77	EA	1
35	2	PAOZZ	5340-00-290-7222	55760	51266	.CAP-PLUG,PROTECTIVE..............F76,F77	EA	1
35	2	PAOZZ	5340-00-264-1203	11599	28501-17	.CAP-PLUG,PROTECTIVE..............F76,F77	EA	1
35	3	PAOZZ	5340-00-872-3347	11599	28552-3	.CAP,PROTECTIVE,DUST..............F76,F77	EA	1
35	4	PAOZZ	5340-00-766-4074	11599	28553-3	.PLUG,PROTECTIVE..............F76,F77	EA	6
35	5	PAOZZ	5340-00-616-4156	11599	28552-2	.CAP,PROTECTIVE,D..............F76,F77	EA	1
35	6	PAOZZ	5365-00-507-7412	96906	MS122123	.PLUG,MACHINE THREAD..............F76,F77	EA	1
35	7	PAOZZ	5365-00-620-0124	11599	46478	.PLUG,MACHINE THREAD..............F76,F77	EA	4
35	8	PCOZZ	5330-00-263-6026	96906	MS29512-04	.PACKING,PREFORMED..............F76,F77	EA	8
35	9	PAOZZ	9905-00-866-6552	11599	75472	.PLATE,IDENTIFICATIO..............F76,F77	EA	1
35	10	XCOZZ	5305-00-753-7077	96906	MS24621-2	.SCREW,TAPPING,THREA..............F76,F77	EA	4
35	11	PAOZZ	2995-00-537-3142	11599	77381	.COVER,SHIPPING..............F76,F77	EA	1
35	12	PAOZZ	5305-00-535-5147	96906	MS35275-281	.SCREW,MACHINE..............F76,F77	EA	3
35	13	PAOZZ	5305-00-535-5172	96906	MS35275-287	.SCREW,MACHINE..............F76,F77	EA	2
35	14	PAOZZ	5310-00-515-7445	88044	AN960C416L	.WASHER,FLAT..............F76,F77	EA	13
35	15	PAOZZ	5340-00-756-4341	81996	5340A01-003	.CLAMP, LOOP..............F76,F77	EA	1
35	16	PAOZZ	5330-00-537-5555	11599	86014	.GASKET,SHIPPING..............F76,F77	EA	1
35	17	PAOZZ	2915-00-874-0667	11599	72418-1	.PLUNGER,POWER TURBI..............F76,F77	EA	1
35	17	PAOZZ	2915-00-874-0668	11599	72418-2	.PLUNGER,POWER TURBI..............F76,F77	EA	1
35	17	PAOZZ	2915-00-874-0669	11599	72418-3	.PLUNGER,POWER TURBI..............F76,F77	EA	1
35	18	PAOZZ	5365-00-856-4511	11599	72419-1	.SPACER,SLEEVE..............F76,F77	EA	1
35	18	PAOZZ	5365-00-856-4512	11599	72419-2	.SPACER,SLEEVE..............F76,F77	EA	1
35	18	PAOZZ	5365-00-856-4513	11599	72419-3	.SPACER,SLEEVE..............F76,F77	EA	1
35	19	PAOZZ	5310-00-860-3359	11599	72419-4	.WASHER,RECESSED..............F76,F77	EA	1
35	18	PAOZZ	5365-00-063-0604	11599	72419-5	.SPACER,SLEEVE..............F76,F77	EA	1
35	18	PAOZZ	5365-00-535-5623	11599	72419-6	.SPACER,SLEEVE..............F76,F77	EA	1
35	18	PAOZZ	5365-00-016-7350	11599	72419-7	.SPACER,SLEEVE..............F76,F77	EA	1
35	18	PAOZZ	5365-00-016-7356	11599	72419-8	.SPACER,SLEEVE..............F76,F77	EA	1
35	19	PAOZZ	5305-00-535-5146	96906	MS35275-280	.SCREW,MACHINE..............F76,F77	EA	1
35	20	PAOZZ	2915-00-874-0661	11599	46677	.CUP,LOCKING..............F76,F77	EA	1
35	21	XBOZZ	5305-00-866-1893	88044	AN500AD10-22	.SCREW,MACHINE..............F76,F77	EA	1
35	22	PAOZZ	5310-00-888-7378	11599	10143	.WASHER,FLAT..............F76,F77	EA	1
35	23	PAOOD	2915-00-596-7426	11599	75501	.BRIDGE ASSEMBLY..............F76,F77	EA	1
35	24	PAOZZ	5365-00-860-8664	91547	2-300-186-01	..RING,LOCK,KEYED..............F76,F77	EA	2
35	25	PAOZZ	5340-00-660-6746	11599	28504-3	..INSERT,SCREW THR..............F76,F77	EA	2
35	26	PAOZZ	2915-00-070-6839	11599	75802	..BUSHING,PLUNGER,TUR..............F76,F77	EA	1
35	27	PAOZZ	5315-00-831-2330	11599	46459	..PIN,STRAIGHT,HEA..............F76,F77	EA	1
35	29	PCFZZ	5330-00-245-1088	96906	MS29513-027	.PACKING,PREFORME..............F76,F77	EA	1

(1) ILLUSTRATION (a) FIG NO	(b) ITEM NO	(2) SMR CODE	(3) NATIONAL STOCK NUMBER	(4) FSCM	(5) PART NUMBER	(6) DESCRIPTION USABLE ON CODE	(7) U/M	(8) QTY INC IN UNIT
35	29	PADZZ	2915-00-551-5638	11599	48519	.HOLDER,SPRING.......F76,F77	EA	1
35	30	PADZZ	5305-00-939-9188	96906	MS35275-263	.SCREW,MACHINE.......F76,F77	EA	2
35	31	PADZZ	5310-00-167-0812	88044	AN960C10L	.WASHER,FLAT.......F76,F77	EA	1
35	32	PCDZZ	5330-00-248-3849	96906	MS29513-016	.PACKING,PREFORMED.......F76,F77	EA	1
35	33	PADZZ	5315-00-663-2771	96906	MS51923-167	.PIN,SPRING.......F76,F77	EA	1
35	34	PADZZ	5310-00-831-2321	11599	28512-1	.NUT,PLAIN,HEXAGO.......F76,F77	EA	1
35	35	PADZZ	5355-00-567-3076	11599	76716	.DIAL,FLOW STOP.......F76,F77	EA	1
35	36	PADZZ	2915-00-551-5627	11599	48776	.PLATE,DIAL.......F76,F77	EA	1
35	37	PCDZZ	5330-00-252-6048	96906	MS29513-006	.PACKING,PREFORMED.......F76,F77	EA	1
35	38	PADZZ	2915-00-977-1052	11599	75243	.SCREW,ADJUSTING,MA.......F76,F77	EA	1
35	39	PADZZ	5355-00-717-2785	11599	76342	.POINTER,DIAL.......F76,F77	EA	1
35	40	PADZZ	5305-00-940-9488	96906	MS35275-226	.SCREW,MACHINE.......F76,F77	EA	1
35	41	PADZZ	5310-00-780-9323	11599	28562-14	.NUT,PLAIN,CAP.......F76,F77	EA	1
35	42	PADZZ	5330-00-202-3823	83259	800-530-1-405	.PACKING WITH RET.......F76,F77	EA	1
35	43	PADZZ	5305-00-912-7253	96906	MS35276-281	.SCREW,MACHINE.......F76,F77	EA	4
35	44	PADZZ	5305-00-912-7287	96906	MS35276-286	.SCREW,MACHINE.......F76,F77	EA	1
35	45	PADZZ	2915-00-679-4260	11599	71641	.SEAL,COVER.......F76,F77	EA	1
35	46	PCDZZ	5330-00-248-3833	96906	MS29513-008	.PACKING,PREFORMED.......F76,F77	EA	1
35	47	PCDZZ	5330-00-616-3447	96906	MS9021-008	.PACKING,PREFORMED.......F76,F77	EA	1
35	48	PADZZ	2915-00-552-5761	11599	75175	.STANDPIPE,GOVERNOR.......F76,F77	EA	1
35	49	PCDZZ	5330-00-248-3848	96906	MS29513-018	.PACKING,PREFORMED.......F76,F77	EA	1
35	50	AODOO		11599	54587	.COMPUTER ASSEMBLY,C SEE FIG.41 FOR BREAKDOWN.......F76,F77	EA	
35	51	PADZZ	5305-00-177-5456	11599	52412	.SCREW,CAP,SOCKET HE.......F76,F77	EA	
35	52	PADZZ	5307-00-604-1109	11599	77064	.STUD,SHOULDERED.......F76,F77	EA	
35	53	PADZZ	5310-00-515-7449	88044	AN960C416L	.WASHER,FLAT.......F76,F77	EA	
35	54	PADZZ	2915-00-552-1182	11599	75057	.RETAINER,SLEEVE.......F76,F77	EA	
35	55	PADZZ	2915-00-552-1144	11599	76130	.GUIDE AND PLUNGER A.......F76,F77	EA	
35	56	PCDZZ	5330-00-248-3849	96906	MS29513-019	.PACKING,PREFORME.......F76,F77	EA	
35	57	PCDZZ	5330-00-250-0224	96906	MS29513-020	.PACKING,PREFORMED.......F76,F77	EA	
35	58	PCDZZ	5330-00-248-3831	96906	MS29513-011	.PACKING,PREFORMED.......F76,F77	EA	
35	59	AODOD		11599	90447	.HOUSING ASSEMBLY,FU CONTROL SEE FIG.37 FOR BREAKDOWN....F76 F77	EA	
35	60	PAFOO	2915-00-593-4551	11599	76672	.TUBE ASSEMBLY,DISCH.......F76,F77	EA	

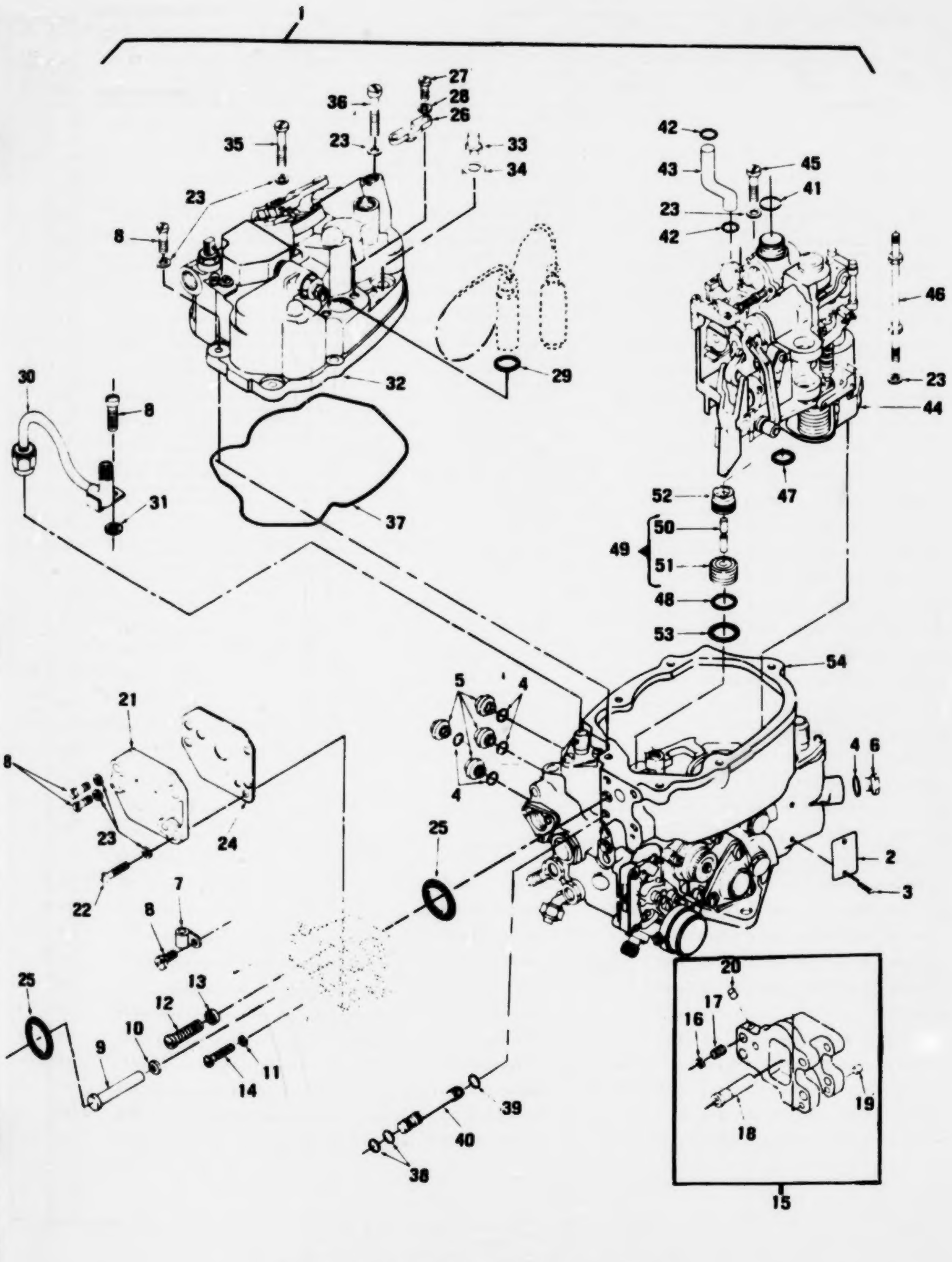

Figure 36. Fuel Control, Main Turbine

(1) ILLUSTRATION (a) FIG NO	(b) ITEM NO	(2) SMR CODE	(3) NATIONAL STOCK NUMBER	(4) FSCM	(5) PART NUMBER	(6) DESCRIPTION USABLE ON CODE	(7) U/M	(8) QTY INC IN UNIT
						GROUP 0406 FUEL CONTROL,MAIN TURBINE (T53-L-13B)		
36	1	PAODD	2915-01-005-5157	11599	1CC77C84	FUEL CONTROL,MAIN,T SEE FIG.34 FOR NHA...............BZL	EA	
36	2	PAOZZ	9905-00-888-8552	11599	75472	.PLATE,IDENTIFICATIO...................................EZL	EA	
36	3	XDOZZ	5305-00-753-7077	96906	MS24621-2	.SCREW,TAPPING,THREA...................................EZL	EA	
36	4	PCOZZ	5330-00-283-8028	96906	MS29512-04	.PACKING,PREFORMED.....................................EZL	EA	
36	5	PAOZZ	5365-00-800-0724	11599	46478	.PLUG,MACHINE THREAD...................................EZL	EA	
36	6	PAOZZ	5365-00-507-7412	96906	MS123123	.PLUG,MACHINE THREAD...................................EZL	EA	
36	7	PAOZZ	5340-00-758-4341	81996	5340AC1-303	.CLAMP, LOOP...EZL	EA	
36	8	PAOZZ	5305-00-535-5147	96906	MS35275-281	.SCREW,MACHINE...EZL	EA	
36	9	PAOZZ	2915-00-874-0887	11599	72418-1	.PLUNGER,POWER TURBI 2.772 TO 2.775 IN.LG..............EZL	EA	
36	9	PAOZZ	2915-00-874-0888	11599	72418-2	.PLUNGER,POWER TURBI 2.782 TO 2.785 IN.LG..............EZL	EA	
36	9	PAOZZ	2915-00-874-0889	11599	72418-3	.PLUNGER,POWER TURBI 2.792 TO 2.795 IN.LG..............EZL	EA	
36	10	PAOZZ	5365-00-858-4511	11599	72419-1	.SPACER,SLEEVE 0.124 TO 0.126 IN.THK...................EZL	EA	
36	10	PAOZZ	5365-00-858-4512	11599	72419-2	.SPACER,SLEEVE 0.135 TO 0.137 IN.THK...................EZL	EA	
36	10	PAOZZ	5365-00-858-4513	11599	72419-3	.SPACER,SLEEVE 0.146 TO 0.148 IN.THK...................EZL	EA	
36	10	PAOZZ	5310-00-880-3399	11599	72419-4	.WASHER,RECESSED 0.113 TO 0.118 IN.THK.................EZL	EA	
36	10	PAOZZ	5365-00-083-0804	11599	72419-5	.SPACER,SLEEVE...EZL	EA	
36	10	PAOZZ	5365-00-935-5623	11599	72419-6	.SPACER,SLEEVE...EZL	EA	
36	10	PAOZZ	5365-00-016-7350	11599	72419-7	.SPACER,SLEEVE 0.161 TO 0.163 IN.THK...................EZL	EA	
36	10	PAOZZ	5365-00-016-7358	11599	72419-8	.SPACER,SLEEVE 0.164 TO 0.166 IN.THK...................EZL	EA	
36	10	PAOZZ	5365-01-017-9145	11599	72419-9	.SPACER,SLEEVE 0.172 TO 0.176 IN.THK...................BZL	EA	
36	10	PAOZZ	5365-01-017-9146	11599	72419-10	.SPACER,SLEEVE 0.178 TO 0.182 IN.THK...................BZL	EA	
36	10	PAOZZ	5365-01-017-9147	11599	72419-11	.SPACER,SLEEVE 0.184 TO 0.188 IN.THK...................BZL	EA	
36	11	PAOZZ	5310-00-888-7378	11599	10143	.WASHER,FLAT...EZL	EA	
36	12	PAOZZ	5305-00-535-5146	96906	MS35275-280	.SCREW,MACHINE...EZL	EA	
36	13	PAOZZ	2915-00-874-0881	11599	46822	.CUP,LOCKING...EZL	EA	
36	14	XBOZZ	5305-00-886-1893	88044	AN500AD10-22	.SCREW,MACHINE...EZL	EA	
36	15	PAODD	2915-00-958-7426	11599	75501	.BRIDGE ASSEMBLY.......................................EZL	EA	
36	16	PAOZZ	5365-00-880-8884	51947	2-300-186-01	..RING,LOCK,KEYED......................................EZL	EA	
36	17	PAOZZ	5340-00-880-8748	11599	28504-3	..INSERT,SCREW THR.....................................EZL	EA	
36	18	PAOZZ	2915-00-070-8839	11599	75502	..BUSHING,PLUNGER,TUR..................................EZL	EA	
36	19	PAOZZ	5315-00-831-2330	11599	46459	..PIN,STRAIGHT,HEA.....................................EZL	EA	
36	20	XAOZZ		11599	28518-1	..PLUG,PROTECTIVE,DUS..................................EZL	EA	
36	21	PAOZZ	2995-00-937-3142	11599	77381	.COVER,SHIPPING..EZL	EA	
36	22	PAOZZ	5305-00-539-5172	96906	MS35275-287	.SCREW,MACHINE...EZL	EA	
36	23	PAOZZ	5310-00-515-7449	88044	AN960C416L	.WASHER,FLAT...EZL	EA	
36	24	PAOZZ	5330-00-937-9999	11599	86014	.GASKE,SHIPPING..EZL	EA	
36	25	PCOZZ	5330-00-285-1088	96906	MS29513-027	.PACKING,PREFORME......................................EZL	EA	

(1) ILLUSTRATION		(2)	(3)	(4)	(5)	(6)	(7)	(8)
(a) FIG NO	(b) ITEM NO	SMR CODE	NATIONAL STOCK NUMBER	FSCM	PART NUMBER	DESCRIPTION USABLE ON CODE	U/M	QTY INC IN UNIT
36	26	PADZZ	2915-00-842-0155	11599	80153	.HOLDER,SPRING....................FZ1	EA	1
36	27	PADZZ	5305-00-935-9188	96906	MS35275-263	.SCREW,MACHINE....................FZ1	EA	2
36	28	PADZZ	5310-00-187-0812	88044	AN960C10L	.WASHER,FLAT....................FZ1	EA	2
36	29	PCDZZ	5330-00-584-1231	96906	MS9021-016	.PACKING,PREFORME....................FZ1	EA	1
36	30	PAFDD	2915-00-552-4991	11599	76872	.TUBE ASSEMBLY,DISCH....................FZ1	EA	1
36	31	PAFZZ	5310-00-531-9515	88044	AN960C416	.WASHER,FLAT....................FZ1	EA	1
36	32	ACDDD		11599	86735	.COVER ASSEMBLY,COMP SEE FIG.46 FOR BREAKDOWN........FZ1	EA	1
36	33	PADZZ	5310-00-780-9323	11599	28562-14	.NUT,PLAIN,CAP....................FZ1	EA	1
36	34	PADZZ	5330-00-202-3823	83259	ECC-530-1-405	.PACKING WITH RET....................FZ1	EA	1
36	35	PADZZ	5305-00-912-7287	96906	MS35276-288	.SCREW,MACHINE....................FZ1	EA	1
36	36	PADZZ	5305-00-912-7298	96906	MS35276-284	.SCREW,MACHINE....................FZ1	EA	1
36	37	PADZZ	2915-00-675-4260	11599	71641	.SEAL,COVER....................FZ1	EA	1
36	38	PCDZZ	5330-00-618-3447	96906	MS9021-008	.PACKING,PREFORMED....................FZ1	EA	2
36	39	PCDZZ	5330-00-248-3833	96906	MS29513-008	.PACKING,PREFORMED....................FZ1	EA	1
36	40	PADZZ	2915-00-552-5761	11599	75175	.STANDPIPE,GOVERNOR....................FZ1	EA	1
36	41	PCDZZ	5330-00-584-1222	96906	MS9021-015	.PACKING,PREFORME....................FZ1	EA	1
36	42	PCDZZ	5330-00-248-3835	96906	MS29513-010	.PACKING,PREFORMED....................FZ1	EA	2
36	43	PADZZ	2915-00-545-5840	11599	83475	.TUBE,TRANSFER,FUEL....................FZ1	EA	1
36	44	ACDDD		11599	54988	.COMPUTER ASSEMBLY,C SEE FIG.41 FOR BREAKDOWN........FZ1	EA	1
36	45	PADZZ	5305-00-177-5656	11599	92412	.SCREW,CAP,SOCKET HE....................FZ1	EA	2
36	46	PADZZ	5307-00-804-1109	11599	77064	.STUD,SHOULDERED....................FZ1	EA	1
36	47	PCDZZ	5330-00-248-3831	96906	MS29513-011	.PACKING,PREFORMED....................FZ1	EA	1
36	48	PCDZZ	5330-00-248-3845	96906	MS29513-019	.PACKING,PREFORME....................FZ1	EA	1
36	49	PADZZ	2915-00-552-1144	11599	76130	.GUIDE AND PLUNGER A....................FZ1	EA	1
36	50	XADZZ		11599	76483	..PLUNGER....................FZ1	EA	1
36	51	XADZZ		11599	76129	..GUIDE,PLUNGER....................FZ1	EA	1
36	52	PADZZ	2915-00-552-1162	11599	75057	.RETAINER,SLEEVE....................FZ1	EA	1
36	53	PCDZZ	5330-00-250-0224	96906	MS29513-020	.PACKING,PREFORMED....................FZ1	EA	1
36	54	ACDDD		11599	51585	.HOUSING ASSEMBLY,FU SEE FIG.38 FOR BREAKDOWN........FZ1	EA	1

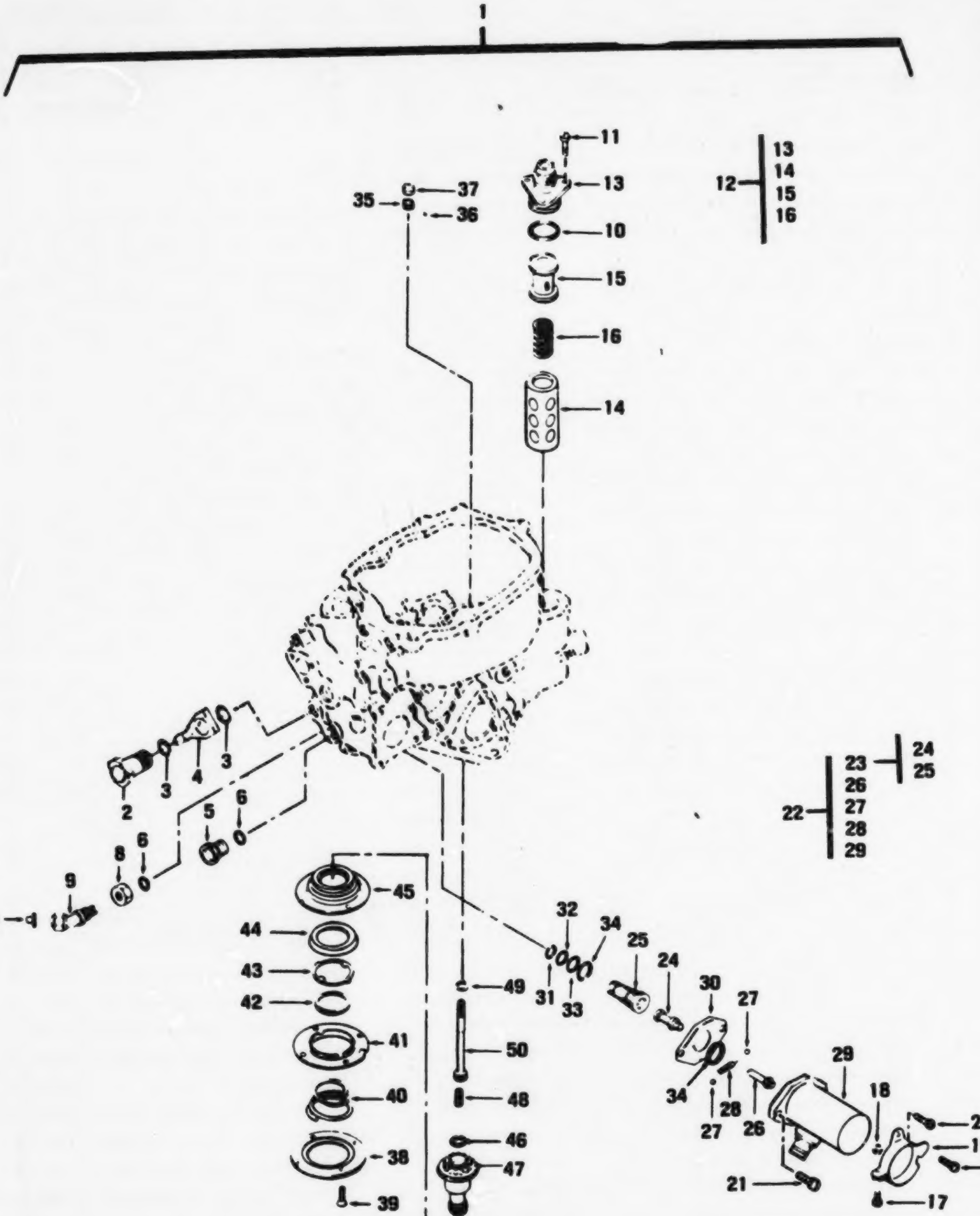

Figure 37. Fuel Housing Assembly (Sheet 1 of 5)

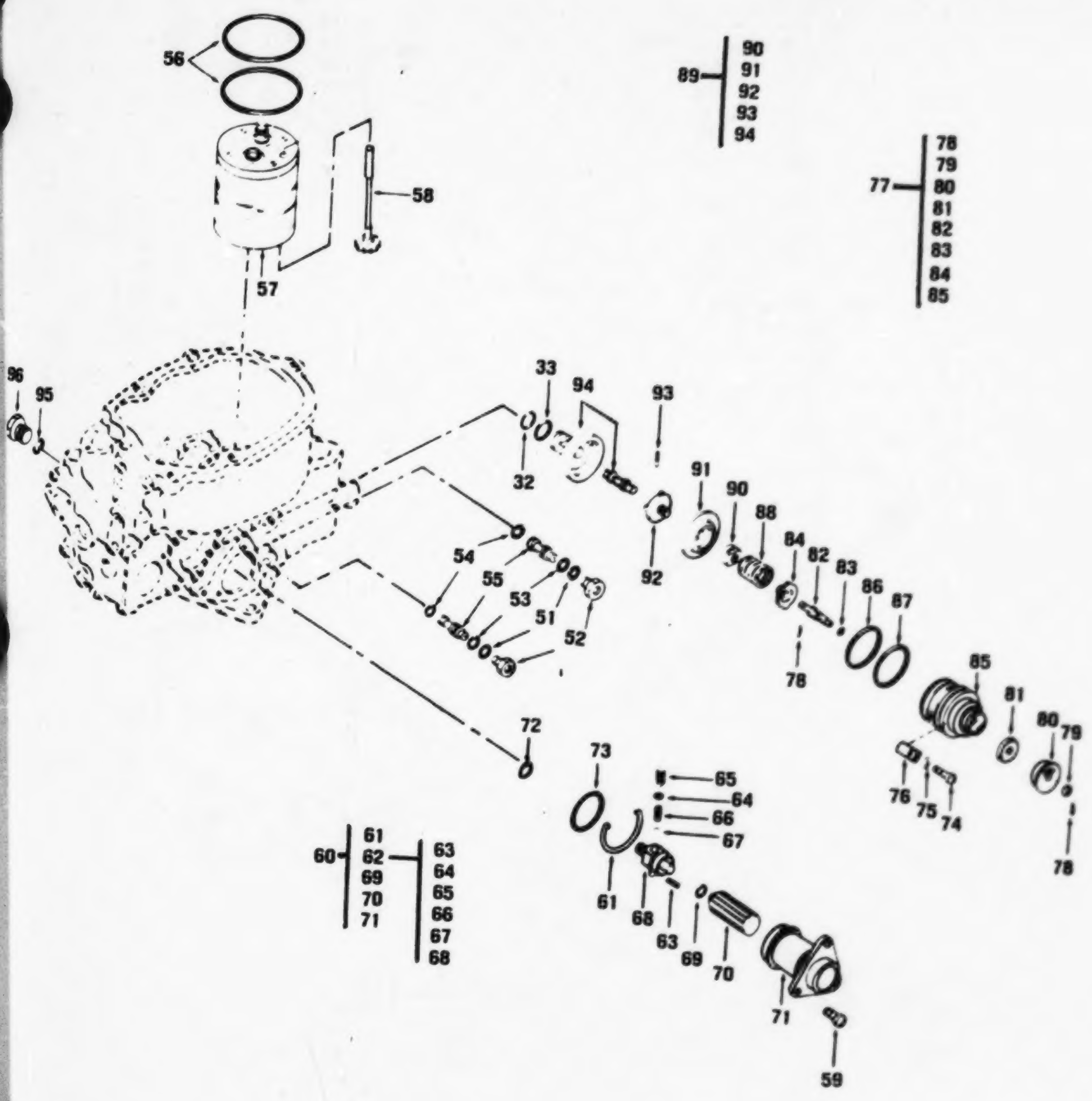

Figure 37. Fuel Housing Assembly (Sheet 2 of 5)

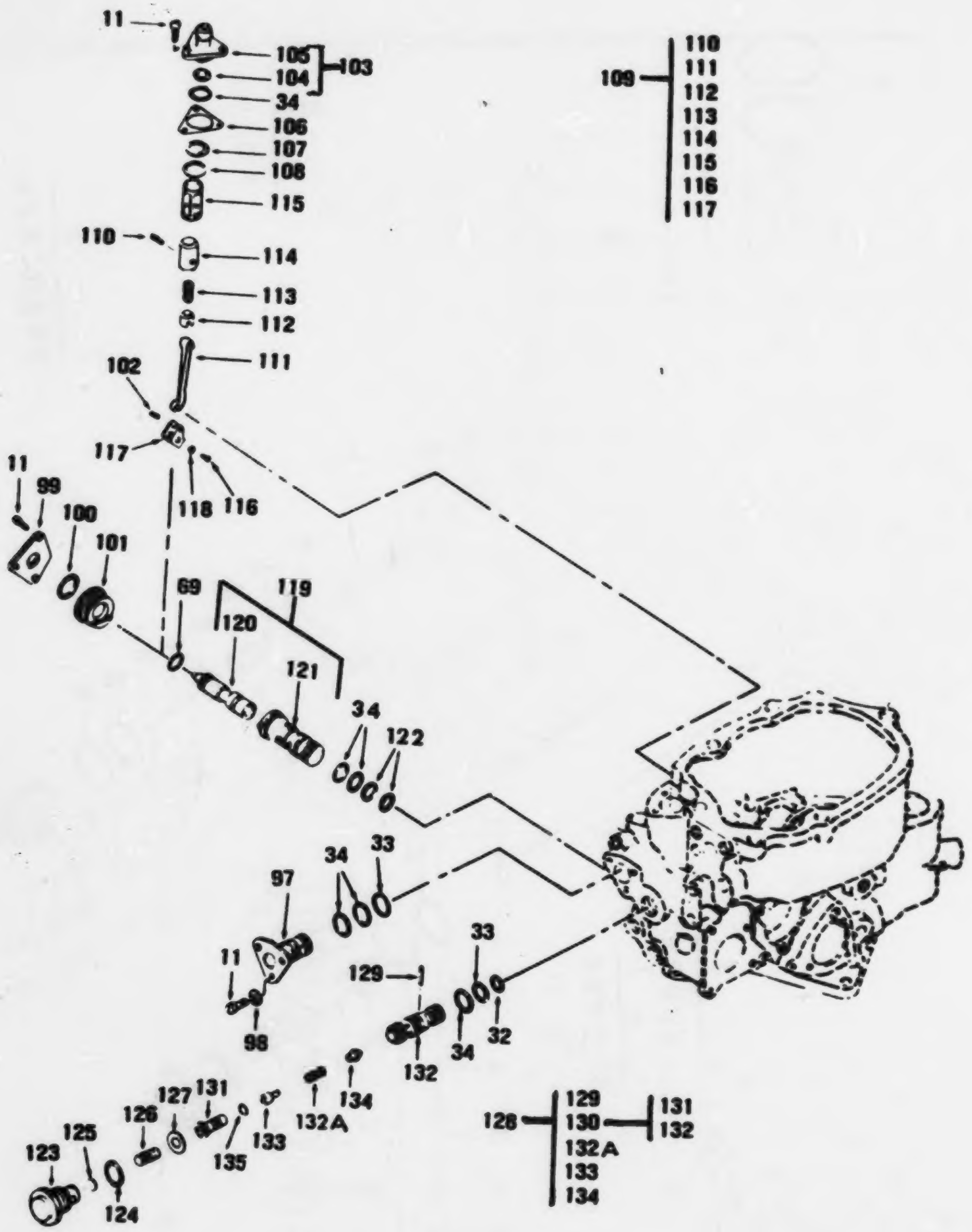

Figure 37. Fuel Housing Assembly (Sheet 3 of 5)

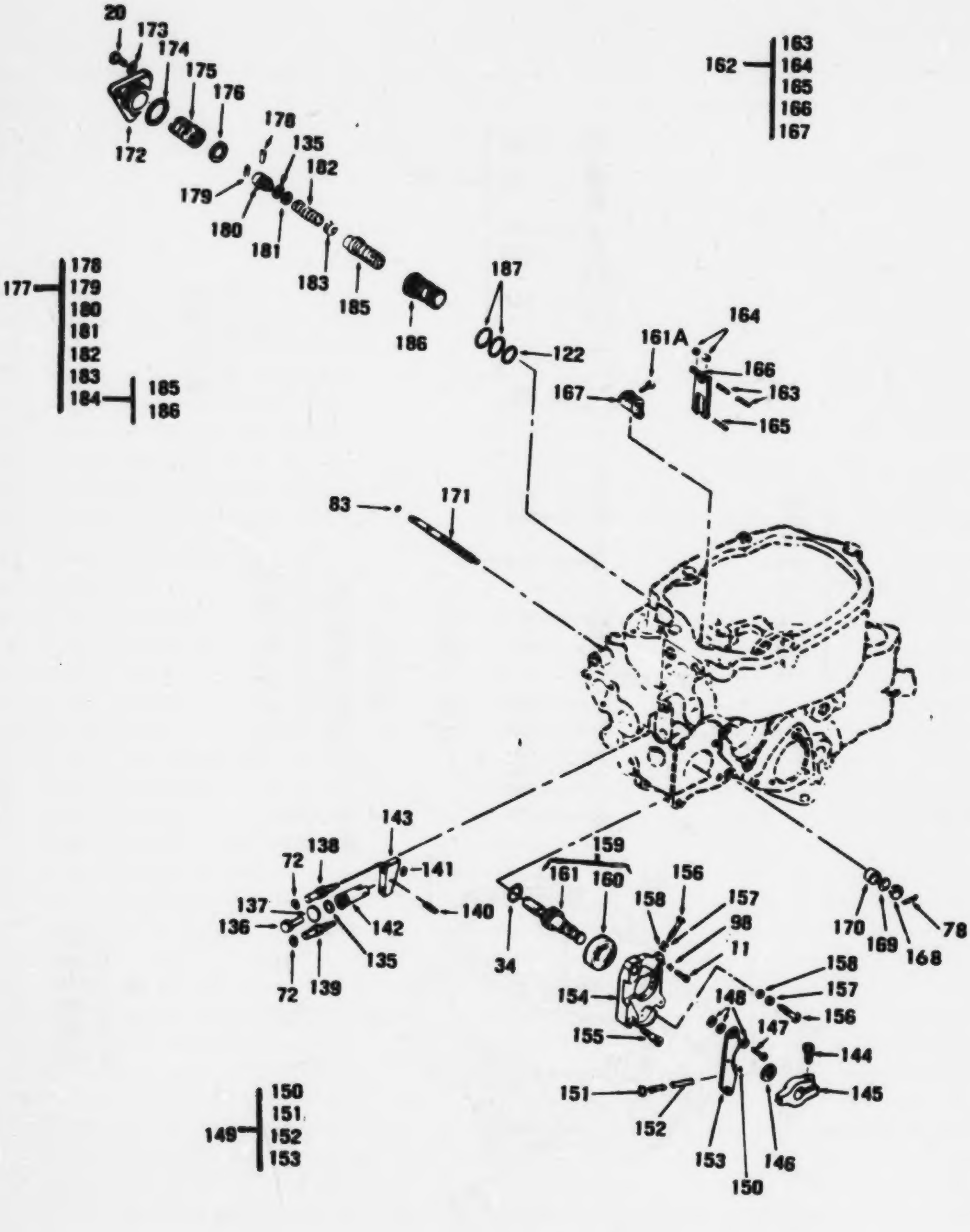

Figure 37. Fuel Housing Assembly (Sheet 4 of 5)

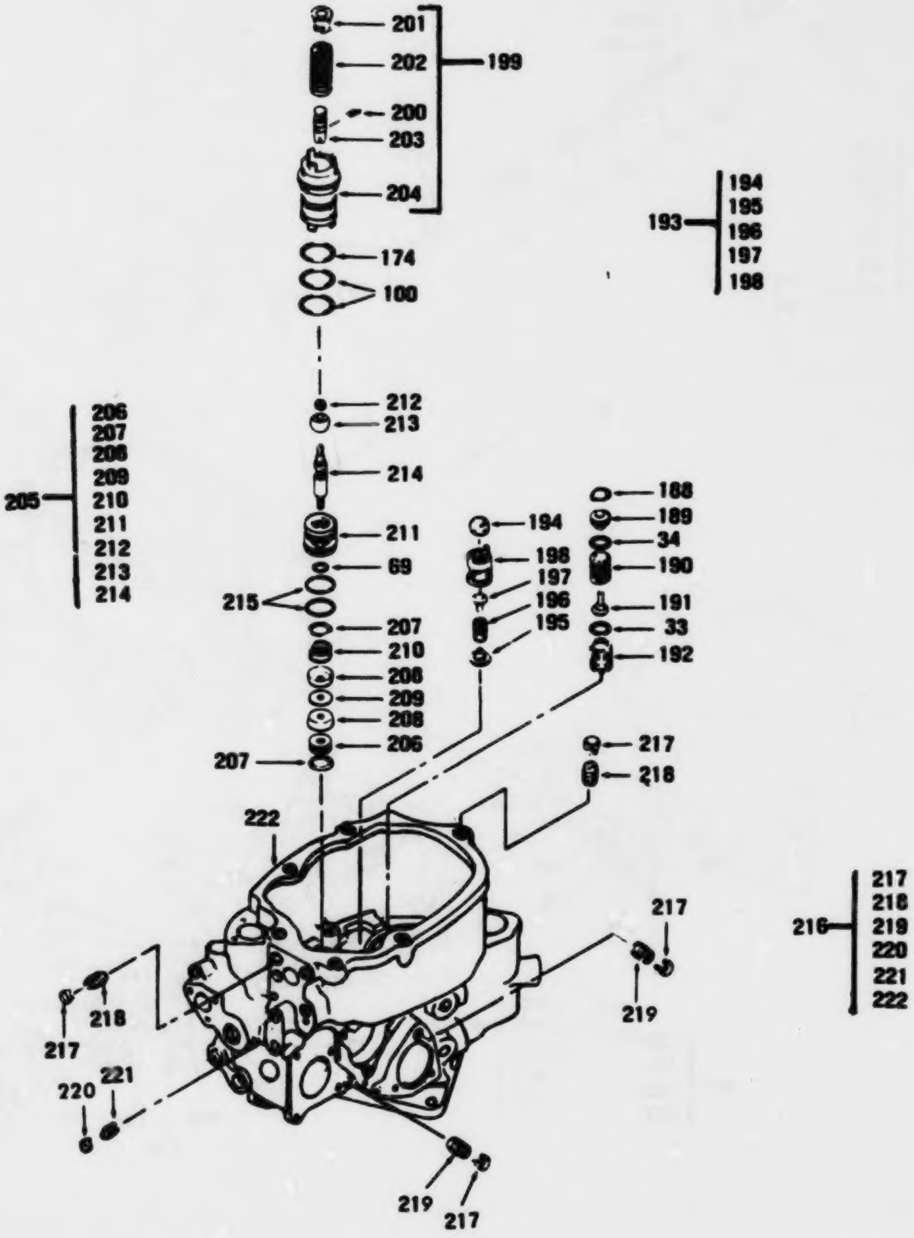

Figure 37. Fuel Housing Assembly (Sheet 5 of 5)

(1) ILLUSTRATION (a) FIG NO	(b) ITEM NO	(2) SMR CODE	(3) NATIONAL STOCK NUMBER	(4) FSCM	(5) PART NUMBER	(6) DESCRIPTION USABLE ON CODE	(7) U/M	(8) QTY INC IN UNIT
						GROUP 0404 FUEL HOUSING ASSEMBLY		
						(T53-L-11C,T53-L-13B)		
37	1	AODDD		11599	90447	HOUSING ASSEMBLY,FU SEE FIG.35 FOR NHA..............F76,F77	EA	1
37	2	PAOZZ	4730-00-647-1556	11599	76210	.BOLT,FLUID PASSAGE..............F76,F77	EA	1
37	3	PCOZZ	5330-00-283-8030	96906	MS29512-06	.PACKING,PREFORMED..............F76,F77	EA	2
37	4	PAOZZ	2915-00-553-4597	11599	76209	.ADAPTER,THREADED SH..............F76,F77	EA	1
37	5	PAOZZ	5365-00-907-7412	96906	MS123123	.PLUG,MACHINE THREAD..............F76,F77	EA	1
37	6	PCOZZ	5330-00-283-8028	96906	MS29512-04	.PACKING,PREFORMED..............F76,F77	EA	2
37	7	PAOZZ	2915-00-566-8053	11599	78436	.CAP ASSEMBLY,FLARED..............F76,F77	EA	1
37	8	PAOZZ	5310-00-565-6019	11599	78435	.NUT,PLAIN,HEXAGON..............F76,F77	EA	1
37	9	PAOZZ	4730-00-803-5049	96906	MS24395D4	.ELBOW,TUBE..............F76,F77	EA	1
37	10	PCOZZ	5330-00-250-0236	96906	MS29513-024	.PACKING,PREFORME COMPONENT OF KIT 2840-00-758-4052......F76 F77	EA	1
37	11	PAOZZ	5305-00-535-5188	96906	MS35275-263	.SCREW,MACHINE..............F76,F77	EA	11
37	12	AOOFF		11599	75165	.STRAINER,SEDIMENT..............F76,F77	EA	1
37	13	PAOZZ	2915-00-075-1185	11599	75288	..FITTING ASSEMBLY..............F76,F77	EA	1
37	14	PAOZZ	2915-00-075-1184	11599	75253	..RETAINER ASSEMBLY,F..............F76,F77	EA	1
37	15	PAOZZ	2915-00-075-1182	11599	77970	..FILTER ELEMENT,FLUI..............F76,F77	EA	1
37	16	PAOZZ	5360-00-075-1183	11599	75256	..SPRING,HELICAL,COMP..............F76,F77	EA	1
37	17	PAOZZ	5305-00-543-2753	96906	MS35266-61	.SCREW,MACHINE..............F76,F77	EA	1
37	18	PAOZZ	5310-00-258-5035	88044	AN121501	.NUT,PLAIN,HEXAGON..............F76,F77	EA	1
37	19	PAOZZ	2915-00-800-0726	11599	70751	.BRACKET,SOLENOID SU..............F76,F77	EA	1
37	20	PAOZZ	5305-00-535-5189	96906	MS35275-264	.SCREW,MACHINE..............F76,F77	EA	4
37	21	PAOZZ	5305-00-842-1538	11599	70946	.SCREW,MACHINE..............F76,F77	EA	2
37	22	PAOFF	2915-00-058-2349	11599	75246	.SOLENOID AND VALVE..............F76,F77	EA	1
37	23	PAFZZ	2915-00-587-0421	11599	74874	..VALVE AND SLEEVE AS..............F76,F77	EA	1
37	24	XAOZZ		11599	74978	...VALVE SOLENOID..............F76,F77	EA	1
37	25	XAOZZ		11599	74977	...SLEEVE,SOLENOID..............F76,F77	EA	1
37	26	PAFZZ	2915-00-577-1051	11599	74979	..INSERT,SOLENOID VAL..............F76,F77	EA	1
37	27	PAFZZ	3110-00-183-7537	96906	MS19060-17	..BALL,BEARING..............F76,F77	EA	2
37	28	PAFZZ	5360-00-075-1187	11599	78585	..SPRING,HELICAL,COMP..............F76,F77	EA	1
37	29	PAOZZ	2925-00-072-1060	11599	75247	..SOLENOID,ELECTRICAL..............F76,F77	EA	1
37	30	PAOZZ	5365-00-756-4314	11599	70570	.SHIM..............F76,F77	EA	1
37	31	PCOZZ	5330-00-248-3838	96906	MS29513-013	.PACKING,PREFORMED..............F76,F77	EA	1
37	32	PCOZZ	5330-00-248-3840	96906	MS29513-014	.PACKING,PREFORMED..............F76,F77	EA	[illegible]
37	33	PAOZZ	5330-00-460-5755	96906	MS29513-015	.PACKING,PREFORME..............F76,F77	EA	6
37	34	PCOZZ	5330-00-248-3845	96906	MS29513-016	.PACKING,PREFORMED COMPONENT OF KIT 2840-00-758-4052.....F76 F77	EA	10
37	35	PAOZZ	3010-00-675-1334	11599	47685	.CLUTCH,POSITIVE..............F76,F77	EA	1
37	36	PAOZZ	5315-00-678-8558	11599	75859	.PIN,STRAIGHT,HEADLE..............F76,F77	EA	1
37	37	PAOZZ	5365-00-618-2108	11599	47697	.SPACER,RING..............F76,F77	EA	1

(1) ILLUSTRATION		(2)	(3)	(4)	(5)	(6) DESCRIPTION	(7)	(8)
(a) FIG NO.	(b) ITEM NO.	SMR CODE	NATIONAL STOCK NUMBER	FSCM	PART NUMBER	USABLE ON CODE	U/M	QTY INC IN UNIT
37	38	PAFZZ	2515-00-618-5628	11599	43637	.PLATE,RETAINING,SEA........F76,F77	EA	
37	39	PAFZZ	5305-00-701-5075	96906	MS51959-64	.SCREW,MACHINE........F76,F77	EA	
37	40	PAFZZ	5360-00-653-1654	11599	24150	.SPRING,HELICAL,COMP........F76,F77	EA	
37	41	PAFZZ	2515-00-552-1165	11599	75151	.PLATE,SEAL........F76,F77	EA	
37	42	PAFZZ	5310-00-550-4271	11599	23535	.WASHER,FLAT........F76,F77	EA	
37	43	PAFZZ	5310-00-560-3173	11599	23532	.WASHER,KEY........F76,F77	EA	
37	44	PAFZZ	2515-00-552-1150	11599	75154	.RING,DIAPHRAGM RETA........F76,F77	EA	
37	45	PAFZZ	2515-00-553-4565	11599	75157	.SEAL ASSEMBLY........F76,F77	EA	
37	46	PCFZZ	5330-00-248-3837	96906	MS29513-113	.PACKING,PREFORMED........F76,F77	EA	
37	47	PAFZZ	2515-01-018-3827	11599	51620	.SHAFT ASSY,FUEL PCU........F76,F77	EA	
37	48	PAFZZ	5360-00-756-7052	11599	43675	.SPRING,HELICAL,COMP........F76,F77	EA	
37	49	PAFZZ	5365-00-701-7321	11599	75242	.SHIM........F76,F77	EA	
37	50	PAFZZ	2515-00-671-5375	11599	76031	.SHAFT,SHOULDERED........F76,F77	EA	
37	51	PCFZZ	5330-00-283-8011	96906	MS29512-03	.PACKING,PREFORME........F76,F77	EA	
37	52	PAFZZ	5365-00-618-7050	11599	43725	.PLUG,MACHINE THREAD........F76,F77	EA	
37	53	PADZZ	5330-00-531-2339	96906	MS29513-305	.PACKING,PREFORME........F76,F77	EA	
37	54	PCDZZ	5330-00-248-3832	96906	MS29513-007	.PACKING,PREFORMED........F76,F77	EA	
37	55	PADZZ	2515-00-552-1136	11599	74823	.STANDPIPE........F76,F77	EA	
37	56	PADZZ	5330-00-460-5803	11599	46786	.PACKING,PREFORME........F76,F77	EA	
37	57	PBDDD	4320-00-552-1154	11599	87352	.PUMP,ROTARY SEE FIG.45 FOR BREAKDOWN........F76,F77	EA	
37	58	PADZZ	2515-00-552-1133	11599	73875	.GEAR AND SHAFT ASSE........F76,F77	EA	
37	59	PADZZ	5305-00-150-5269	88044	AN503-416-8	.SCREW, MACHINE........F76,F77	EA	
37	60	AODDD		11599	76721	.FILTER,FLUID,PRESSU........F76,F77	EA	
37	61	PADZZ	5365-00-756-4306	11599	46286	..RING,RETAINING........F76,F77	EA	
37	62	PADDD	2515-00-552-1146	11599	76722	..HOUSING ASSEMBLY,BY........F76,F77	EA	
37	63	PADZZ	5315-00-844-5444	96906	MS16562-194	...PIN,SPRING........F76,F77	EA	
37	64	PCDZZ	5330-00-248-3833	96906	MS29513-008	...PACKING,PREFORMED........F76,F77	EA	
37	65	PADZZ	5340-00-707-8851	11599	46270	...RETAINER,VALVE........F76,F77	EA	
37	66	PADZZ	5360-00-587-5536	11599	75804	...SPRING,HELICAL,COMP........F76,F77	EA	
37	67	PADZZ	3110-00-585-7002	11599	28570-6	...BALL,BEARING........F76,F77	EA	
37	68	PADZZ	2515-00-600-6618	11599	46271	...HOUSING,VALVE........F76,F77	EA	
37	69	PCDZZ	5330-00-248-3836	96906	MS29513-012	..PACKING,PREFORMED........F76,F77	EA	
37	70	PADZZ	2515-00-756-7083	11599	28876	..FILTER ELEMENT,FLUI COMPONENT OF KIT 2840-00-758-4052..... F76,F77	EA	
37	71	PADZZ	2515-00-756-4308	11599	48862	..COVER ASSEMBLY,STRA........F76,F77	EA	
37	72	PCDZZ	5330-00-248-3835	96906	MS29513-010	.PACKING,PREFORMED COMPONENT OF KIT 2840-00-758-4052.....F76 F77	EA	
37	73	PCDZZ	5330-00-285-1088	96906	MS29513-027	.PACKING,PREFORME COMPONENT OF KIT 2840-00-758-4052......F76 F77	EA	
37	74	PADZZ	5305-00-535-5147	96906	MS35275-281	.SCREW,MACHINE........F76,F77	EA	
37	75	PADZZ	5310-00-167-0325	88044	555-4	.WASHER,CONVEX........F76,F77	EA	

(1) ILLUSTRATION (a) FIG NO	(b) ITEM NO	(2) SMR CODE	(3) NATIONAL STOCK NUMBER	(4) FSCM	(5) PART NUMBER	(6) DESCRIPTION USABLE ON CODE	(7) U/M	(8) QTY INC IN UNIT
37	76	PAOZZ	2915-00-671-7885	11599	43532	.CLAMP,RIM ATTACHING.........F76,F77	EA	[illegible]
37	77	PAODD	2915-00-758-8826	11599	78551	.HOUSING ASSY,MAIN.........F76,F77	EA	1
37	78	PAOZZ	5315-00-065-3436	81343	AS123761	..PIN,COTTER.........F76,F77	EA	2
37	79	PAOZZ	5365-00-484-6511	11599	12027-1	..SHIM.........F76,F77	EA	1
37	79	PAOZZ	5365-00-484-6512	11599	12027-2	..SHIM.........F76,F77	EA	1
37	79	PAOZZ	5310-00-484-6513	11599	12027-3	..WASHER,FLAT.........F76,F77	EA	1
37	80	PAOZZ	2915-00-671-5475	11599	76714	..CAP,HAND ADJUSTING.........F76,F77	EA	1
37	81	PAOZZ	2915-00-671-7932	11599	25265	..PLATE,DETENT,NUMBER.........F76,F77	EA	1
37	82	PAOZZ	2915-00-671-7879	11599	25266	..SCREW,ADJUSTING.........F76,F77	EA	1
37	83	PCOZZ	5330-00-584-1100	96906	MS9021-006	..PACKING,PREFORME.........F76,F77	EA	[illegible]
37	84	PAOZZ	2915-00-680-3143	11599	43795	..HOLDER,SPRING.........F76,F77	EA	1
37	85	PAOZZ	2915-00-966-9355	11599	78550	..HOUSING,MAIN REGULA.........F76,F77	EA	1
37	86	PCOZZ	5330-00-285-1076	96906	MS29513-126	.PACKING,PREFORME.........F76,F77	EA	1
37	87	PCOZZ	5330-00-285-1078	96906	MS29513-127	.PACKING,PREFORMED.........F76,F77	EA	1
37	88	PAOZZ	5360-00-828-2926	11599	48504	.SPRING,HELICAL,COMP.........F76,F77	EA	1
37	89	AODDD		11599	83432	.VALVE AND DIAPHRAGM.........F76,F77	EA	1
37	90	PCOZZ	5310-00-587-9819	11599	78548	..NUT,PLAIN,ROUND.........F76,F77	EA	1
37	91	PAOZZ	2915-00-647-1704	11599	78558	..DIAPHRAGM ASSY,VALV.........F76,F77	EA	1
37	92	PAOZZ	2915-00-944-8303	11599	82576	..STOP,PRESSURE REGUL.........F76,F77	EA	1
37	93	PAOZZ	5315-00-947-3595	11599	82445	..PIN,CLEVIS.........F76,F77	EA	1
37	94	PAOZZ	2915-00-945-9851	11599	83401	..SLEEVE AND VALVE AS.........F76,F77	EA	1
37	95	PCOZZ	5330-00-248-3839	96906	MS29513-111	.PACKING,PREFORMED.........F76,F77	EA	1
37	96	PAOZZ	5365-00-820-9412	11599	26563-6	.PLUG,MACHINE THREAD.........F76,F77	EA	1
37	97	PAOZZ	2915-00-856-0113	11599	70243	.PLUG,DUMMY,EMERGENC.........F76,F77	EA	1
37	98	PAOZZ	5310-00-167-0812	88044	AN960C10L	.WASHER,FLAT.........F76,F77	EA	7
37	99	PAOZZ	2915-00-577-1069	11599	74565	.PLATE,RETAINING.........F76,F77	EA	1
37	100	PCOZZ	5330-00-290-0224	96906	MS29513-020	.PACKING,PREFORMED.........F76,F77	EA	2
37	101	PAOZZ	2915-00-987-0419	11599	74831	.COVER,EMERGENCY MET.........F76,F77	EA	1
37	102	PAOZZ	5315-00-702-9416	11599	75973	.PIN,STRAIGHT,HEADLE.........F76,F77	EA	1
37	103	PADDD	2915-00-953-4967	11599	75208	.FITTING AND STOPCOC.........F76,F77	EA	1
37	104	PAOZZ	5330-00-647-2969	11599	46901	..GASKET.........F76,F77	EA	1
37	105	XAOZZ		11599	75018	..FITTING,FUEL OUTLET.........F76,F77	EA	1
37	106	PAOZZ	5365-00-819-0019	11599	47468	.SHIM.........F76,F77	EA	1
37	107	PAOZZ	5330-00-618-6985	11599	45769	.RETAINER,PACKING.........F76,F77	EA	1
37	108	PAOZZ	5365-00-647-3024	11599	47496	.SHIM.........F76,F77	EA	1
37	109	PAODD	2915-00-887-6434	11599	78277	.STOPCOCK ASSY.........F76,F77	EA	1
37	110	PAOZZ	2915-00-985-9190	11599	74971	..SHAFT,STRAIGHT.........F76,F77	EA	1
37	111	PAOZZ	2915-00-999-0851	11599	78276	..LINK,CONNECTING.........F76,F77	EA	1
37	112	PAOZZ	2915-00-671-5454	11599	45768	..PLUNGER,DETENT.........F76,F77	EA	1
37	113	PAOZZ	5360-00-205-9909	11599	45765	..SPRING,HELICAL,COMP.........F76,F77	EA	1

(1) ILLUSTRATION (a) FIG NO	(b) ITEM NO	(2) SMR CODE	(3) NATIONAL STOCK NUMBER	(4) FSCM	(5) PART NUMBER	(6) DESCRIPTION USABLE ON CODE	(7) U/M	(8) QTY INC IN UNIT
37	114	PADZZ	2915-00-551-0974	11599	74801	..VALVE,STOPCOCK....F76,F77	EA	[illegible]
37	115	PADZZ	2915-00-577-1050	11599	74797	..SLEEVE,STOPCOCK....F76,F77	EA	[illegible]
37	116	PADZZ	5305-00-858-6903	11599	74168	..SCREW,SELF-LOCKING....F76,F77	EA	[illegible]
37	117	PADZZ	2915-00-553-4952	11599	75060	..LEVER,METERING,STOP....F76,F77	EA	[illegible]
37	118	PADZZ	5340-00-647-2962	11599	46803	.CUP,LOCKING....F76,F77	EA	[illegible]
37	119	PADZZ	2915-00-556-7428	11599	76140	.SLEEVE AND VALVE AS....F76,F77	EA	[illegible]
37	120	XADZZ		11599	76139	..VALVE,EMERGENCY MET....F76,F77	EA	[illegible]
37	121	XADZZ		11599	76138	..SLEEVE,EMERGENCY ME....F76,F77	EA	[illegible]
37	122	PCOZZ	5330-00-248-3842	96906	MS29513-017	.PACKING,PREFORMED....F76,F77	EA	[illegible]
37	123	PADZZ	2915-00-551-0975	11599	74828	.COVER,THREADED,FOOT....F76,F77	EA	[illegible]
37	124	PADZZ	5330-00-283-8032	96906	MS29512-10	.PACKING,PREFORME....F76,F77	EA	[illegible]
37	125	PADZZ	5365-00-647-2769	11599	46301	.SHIM....F76,F77	EA	[illegible]
37	126	PADZZ	5360-00-842-3783	11599	46295	.SPRING,HELICAL,COMP....F76,F77	EA	[illegible]
37	127	PADZZ	5365-00-647-3023	11599	70005	.SHIM....F76,F77	EA	[illegible]
37	128	PADOO	2915-00-757-1535	11599	75019	.VALVE ASSEMBLY,FOOT....F76,F77	EA	[illegible]
37	129	PADZZ	5315-00-702-5618	11599	75020	..PIN,STRAIGHT,HEADLE....F76,F77	EA	[illegible]
37	130	PADZZ	2915-00-552-1141	11599	75022	..SLEEVE AND FOOT VAL....F76,F77	EA	[illegible]
37	131	XADZZ		11599	75025	...VALVE,FOOT....F76,F77	EA	[illegible]
37	132	XADZZ		11599	75023	...SLEEVE,FOOT VALVE A....F76,F77	EA	[illegible]
37	132A	PADZZ	5360-00-704-5335	11599	46296	..SPRING,HELICAL,COMP....F76,F77	EA	[illegible]
37	133	PADZZ	2915-00-552-1140	11599	75021	..RETAINER,CHECK VALV....F76,F77	EA	[illegible]
37	134	PADZZ	2915-00-552-1142	11599	75024	..VALVE,FUEL CONTROL....F76,F77	EA	[illegible]
37	135	PCOZZ	5330-00-248-3831	96906	MS29513-011	.PACKING,PREFORMED....F76,F77	EA	[illegible]
37	136	PADZZ	5306-00-837-7011	11599	46322	.BOLT,MACHINE....F76,F77	EA	[illegible]
37	137	PADZZ	5310-00-831-2338	11599	47516	.WASHER,FLAT....F76,F77	EA	[illegible]
37	138	PADZZ	5305-00-831-4078	11599	46324	.SETSCREW MINIMUM....F76,F77	EA	[illegible]
37	139	PADZZ	5305-00-831-4078	11599	46324	.SETSCREW MAXIMUM....F76,F77	EA	[illegible]
37	140	XBDZZ	5315-00-600-0752	11599	46325	.PIN,GROOVED,HEAD....F76,F77	EA	[illegible]
37	141	PADZZ	5310-00-685-3744	88044	AN960C8	.WASHER,FLAT....F76,F77	EA	[illegible]
37	142	PADZZ	2915-00-577-1066	11599	75059	.RETAINER,MANUAL CAM....F76,F77	EA	[illegible]
37	143	PADZZ	2915-00-558-7449	11599	78750	.CAM,THROTTLE ADJUST....F76,F77	EA	[illegible]
37	144	PADZZ	5305-00-145-0999	11599	72066	.SCREW,MACHINE....F76,F77	EA	[illegible]
37	145	PADZZ	2915-00-555-0888	11599	78389	.LEVER,THROTTLE,SHAF....F76,F77	EA	[illegible]
37	146	PADZZ	5310-00-831-2339	11599	70490	.WASHER,FLAT....F76,F77	EA	[illegible]
37	147	PADZZ	5305-00-925-4774	96906	MS35275-214	.SCREW,MACHINE....F76,F77	EA	[illegible]
37	148	PADZZ	5310-00-782-1249	96906	MS15795-804	.WASHER,FLAT....F76,F77	EA	[illegible]
37	149	PADOO	2915-00-566-5352	11599	78494	.PLATE AND DETENT AS....F76,F77	EA	[illegible]
37	150	PADZZ	5315-00-823-8740	96906	MS16562-192	..PIN,SPRING....F76,F77	EA	[illegible]
37	150	PADZZ	5315-00-058-5858	96906	MS171433	..PIN,SPRING....F76,F77	EA	[illegible]
37	151	PADZZ	2915-00-566-5335	11599	78392	..DETENT,PART POWER T....F76,F77	EA	[illegible]

(1) ILLUSTRATION (a) FIG NO	(b) ITEM NO	(2) SMR CODE	(3) NATIONAL STOCK NUMBER	(4) FSCM	(5) PART NUMBER	(6) DESCRIPTION USABLE ON CODE	(7) U/M	(8) QTY INC IN UNIT
37	152	PAOZZ	5360-00-666-5665	11599	75157	..SPRING,HELICAL,COMP..........F26,F27	EA	1
37	153	XAOZZ		11599	78391	..PLATE,INDICATOR..........F26,F27	EA	1
37	154	PAOZZ	2515-00-566-5357	11599	78390	.RETAINER,BEARING TH..........F26,F27	EA	1
37	155	PAOZZ	5305-00-853-1702	11599	46367	.SCREW,SHOULDER..........F26,F27	EA	2
37	156	PAOZZ	5305-00-837-7012	11599	46782	.SETSCREW MAXIMUM..........F26,F27	EA	1
37	156	PAOZZ	5305-00-837-7012	11599	46782	.SETSCREW MINIMUM..........F26,F27	EA	1
37	157	PAOZZ	5310-00-831-2320	11599	28514-6	.NUT,PLAIN,HEXAGON..........F26,F27	EA	2
37	158	PAOZZ	5310-00-831-2323	11599	23431	.WASHER,FLAT..........F26,F27	EA	2
37	159	AOOOO		11599	78222	.SHAFT AND BEARING A..........F26,F27	EA	1
37	160	PAOZZ	3110-00-016-1575	11599	46474	..BEARING,BALL,AIRFRA..........F26,F27	EA	1
37	161	PAOZZ	2515-00-858-8460	11599	77421	..SHAFT ASSEMBLY,THRO..........F26,F27	EA	1
37	161A	PAOZZ	5305-00-542-8431	96906	MS35275-245	..SCREW,MACHINE..........F26,F27	EA	1
37	162	AOOOO		11599	75213	.LEVER AND FOLLOWER..........F26,F27	EA	1
37	163	PAOZZ	5315-00-583-0505	11599	74547	..PIN,STRAIGHT,HEADLE..........F26,F27	EA	2
37	164	PAOZZ	3120-00-836-0545	11599	74845	..ROLLER,LINEAR-ROTAR..........F26,F27	EA	1
37	165	PAOZZ	5315-00-577-1082	11599	74550	..PIN,GROOVED,HEAD..........F26,F27	EA	1
37	166	PAOZZ	2515-00-553-4553	11599	75058	..LEVER,MANUAL CAM FO..........F26,F27	EA	1
37	167	PAOZZ	2515-00-587-0420	11599	74850	..LEVER,MANUAL CAM..........F26,F27	EA	1
37	168	PAOZZ	5310-00-167-1344	88044	AN315-4R	.NUT,PLAIN,HEXAGON..........F26	EA	1
37	169	PAOZZ	5310-00-515-7445	88044	AN960C416L	.WASHER,FLAT..........F26,F27	EA	1
37	170	PAOZZ	5365-00-707-8886	11599	46333	.SPACER,SLEEVE..........F26,F27	EA	1
37	171	PAOZZ	2515-00-552-1160	11599	75046	.VALVE,FLOW ADJUSTME..........F26,F27	EA	1
37	172	PAOZZ	2515-00-056-7088	11599	75144	.COVER,ACCESS..........F26,F27	EA	1
37	173	PAOZZ	5310-00-025-7770	11599	12738	.WASHER,FLAT..........F26,F27	EA	2
37	174	PCOZZ	5330-00-250-0227	96906	MS29513-021	.PACKING,PREFORMED..........F26,F27	EA	2
37	175	PAOZZ	5360-00-587-7115	11599	46284	.SPRING,HELICAL,COMP..........F26,F27	EA	1
37	176	PAOZZ	5365-00-647-2540	11599	46256	.SHIM..........F26,F27	EA	1
37	177	AOOOO		11599	76123	.VALVE ASSY,EMERGENC..........F26,F27	EA	1
37	178	PAOZZ	5315-00-550-2556	11599	75860	..PIN,STRAIGHT,HEADLE..........F26,F27	EA	1
37	179	PAOZZ	2515-00-710-7535	11599	46255	..SLEEVE,PIN RETAININ..........F26,F27	EA	1
37	180	PAOZZ	5340-00-587-7114	11599	46252	..SEAT,SPRING,HIGH..........F26,F27	EA	1
37	181	PAOZZ	5365-00-647-2755	11599	46257	..SHIM..........F26,F27	EA	1
37	182	PAOZZ	5360-00-853-1700	11599	46283	..SPRING,HELICAL,COMP..........F26,F27	EA	1
37	183	PAOZZ	4820-00-705-0425	11599	75013	..VALVE,HIGH PRESS..........F26,F27	EA	1
37	184	PAOZZ	2515-00-552-1143	11599	76124	..VALVE AND SLEEVE AS..........F26,F27	EA	1
37	185	XAOZZ		11599	76126	..VALVE..........F26,F27	EA	1
37	186	XAOZZ		11599	76125	...SLEEVE..........F26,F27	EA	1
37	187	PCOZZ	5330-00-248-3848	96906	MS29513-018	.PACKING,PREFORMED..........F26,F27	EA	2
37	188	PAOZZ	5365-00-205-4756	96906	MS16625-4077	.RING,RETAINING..........F26,F27	EA	1
37	189	PAOZZ	2915-00-552-5362	11599	75008	.RETAINER,CHECK VALV..........F26,F27	EA	1

(1) ILLUSTRATION (a) FIG NO.	(b) ITEM NO	(2) SMR CODE	(3) NATIONAL STOCK NUMBER	(4) FSCM	(5) PART NUMBER	(6) DESCRIPTION USABLE ON CODE	(7) U/M	(8) QTY INC IN UNIT
37	190	PADZZ	5360-00-842-2419	11599	46268	.SPRING,HELICAL,COMP....F76,F77	EA	1
37	191	PADZZ	2915-00-591-0989	11599	75C15	.VALVE,STEMMEC CHECK....F76,F77	EA	1
37	192	PADZZ	2915-00-966-9356	11599	75C12	.SLEEVE,CHECK VALVE....F76,F77	EA	1
37	193	PADCD	2915-00-992-1153	11599	75805	.VALVE ASSEMBLY,CHEC....F76,F77	EA	1
37	194	PADZZ	2915-00-647-1680	11599	78336	..STRAINER ELEMENT,SE....F76,F77	EA	1
37	195	XADZZ		11599	75797	..GUICE,CHECK VALVE....F76,F77	EA	1
37	196	XADZZ		11599	75799	..SPRING,HELICAL,COMP....F76,F77	EA	1
37	197	XADZZ		11599	75796	..VALVE,CHECK....F76,F77	EA	1
37	198	XADZZ		11599	75798	..SLEEVE,CHECK VALVE....F76,F77	EA	1
37	199	PADCD	2915-00-992-1158	11599	75979	.VALVE ASSEMBLY,MAIN....F76,F77	EA	1
37	200	PADZZ	5315-00-718-6353	11599	46403	..PIN,LOCK....F76,F77	EA	1
37	201	PADZZ	2915-00-994-3258	11599	75117	..SEAT,SPRING....F76,F77	EA	1
37	202	PADZZ	5360-00-838-1599	11599	46364	..SPRING,HELICAL,COMP....F76,F77	EA	1
37	203	XADZZ		11599	75977	..VALVE,MAIN METERING....F76,F77	EA	1
37	204	XADZZ		11599	75978	..SLEEVE AND PLUG....F76,F77	EA	1
37	205	ACDCD		11599	75178	.VALVE AND SLEEVE AS....F76,F77	EA	1
37	206	PADZZ	2915-00-992-1161	11599	75C47	..BODY,PISTON,LOCKING....F76,F77	EA	1
37	207	PADZZ	5360-00-678-8984	11599	75C49	..SPRING,GARTER,EXTEN....F76,F77	EA	2
37	208	PADZZ	5340-00-647-2829	11599	46383	..CUP,COMPRESSION....F76,F77	EA	2
37	209	PADZZ	5310-00-591-9832	11599	46469	..WASHER,FLAT....F76,F77	EA	1
37	210	PADZZ	2915-00-719-2240	11599	75C48	..BODY,PISTON,CHANGED....F76,F77	EA	1
37	211	PADZZ	2915-00-704-9434	11599	72645	..SLEEVE,CHANGEOVER V....F76,F77	EA	1
37	212	PADZZ	5310-00-977-5721	11599	74909	..NUT,PLAIN,ROUND....F76,F77	EA	1
37	213	PADZZ	2915-00-679-4259	11599	74829	..VALVE,SPHERICAL....F76,F77	EA	1
37	214	PADZZ	2915-00-991-0936	11599	74830	..ROD,CHANGEOVER VALV....F76,F77	EA	1
37	215	PCDZZ	5330-00-248-3849	96906	MS29513-019	.PACKING,PREFORME....F76,F77	EA	2
37	216	PBDCD	2915-00-828-3417	11599	87890	.HOUSING,FUEL CONTRO....F76,F77	EA	1
37	217	PADZZ	5365-00-680-8884	51547	2-300-186-01	..RING,LOCK,KEYED....F76,F77	EA	16
37	218	PADZZ	5340-00-847-4958	11599	28904-10	..INSERT,SCREW THREAD....F76,F77	EA	4
37	219	PADZZ	5340-00-680-8748	11599	28904-3	..INSERT,SCREW THR....F76,F77	EA	[illegible]
37	220	PADZZ	5365-00-633-1894	01556	MR5A15	..RING,LOCK,KEYED....F76,F77	EA	1
37	221	XBDZZ	5340-00-875-8009	11599	28904-9	..INSERT,SCREW THREAD....F76,F77	EA	2
37	222	XADZZ		11599	87891	..HOUSING AND PLUG AS....F76,F77	EA	1
37		PADZZ	2840-00-758-4052	51547	1-200-030-27	PARTS KIT,FUEL SYST SYSTEMS SEE FLNCTICNAL GROUP 50 FOR COMPONENTS....F76,F77	EA	1

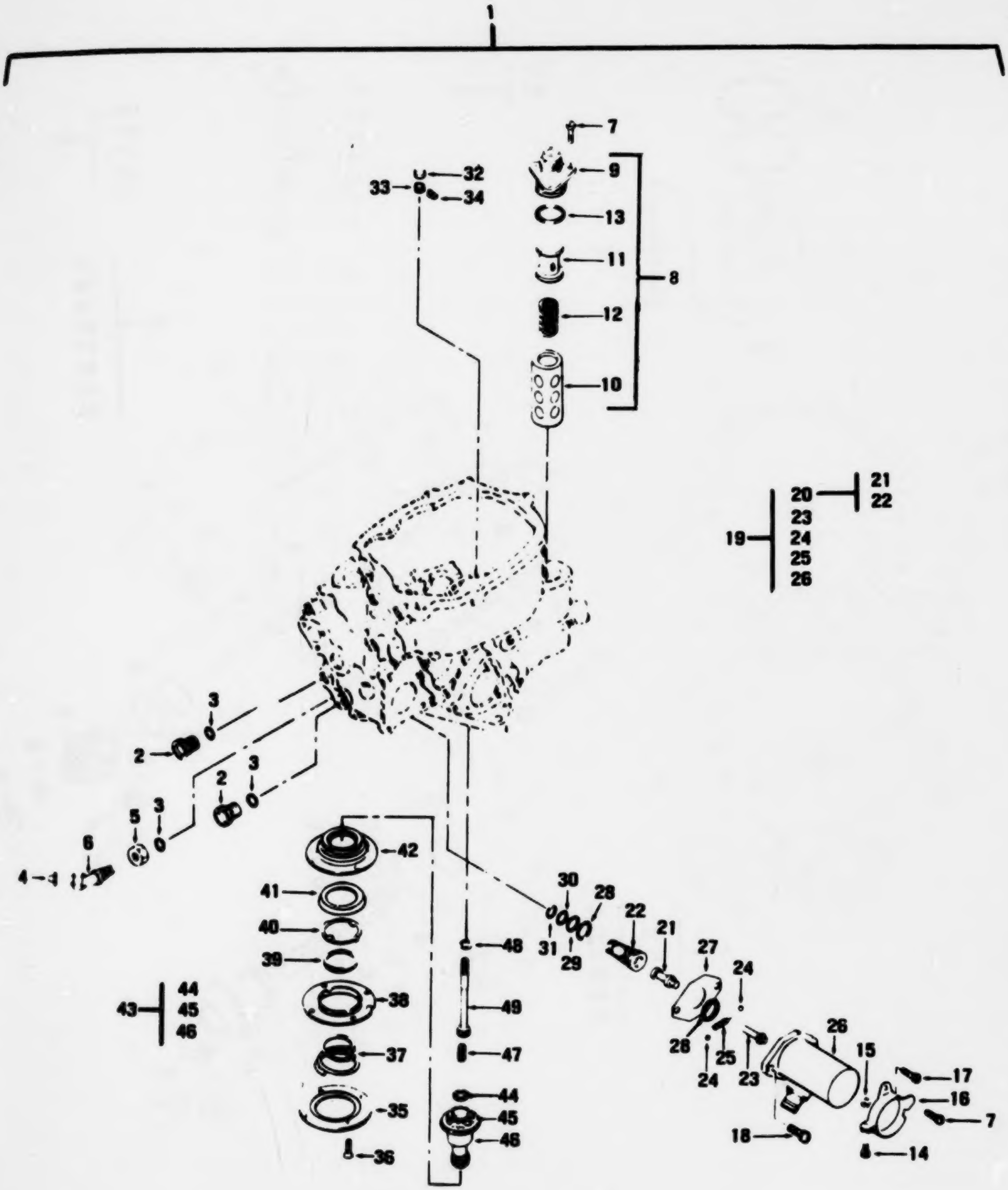

Figure 38. Fuel Housing Assembly (Sheet 1 of 5)

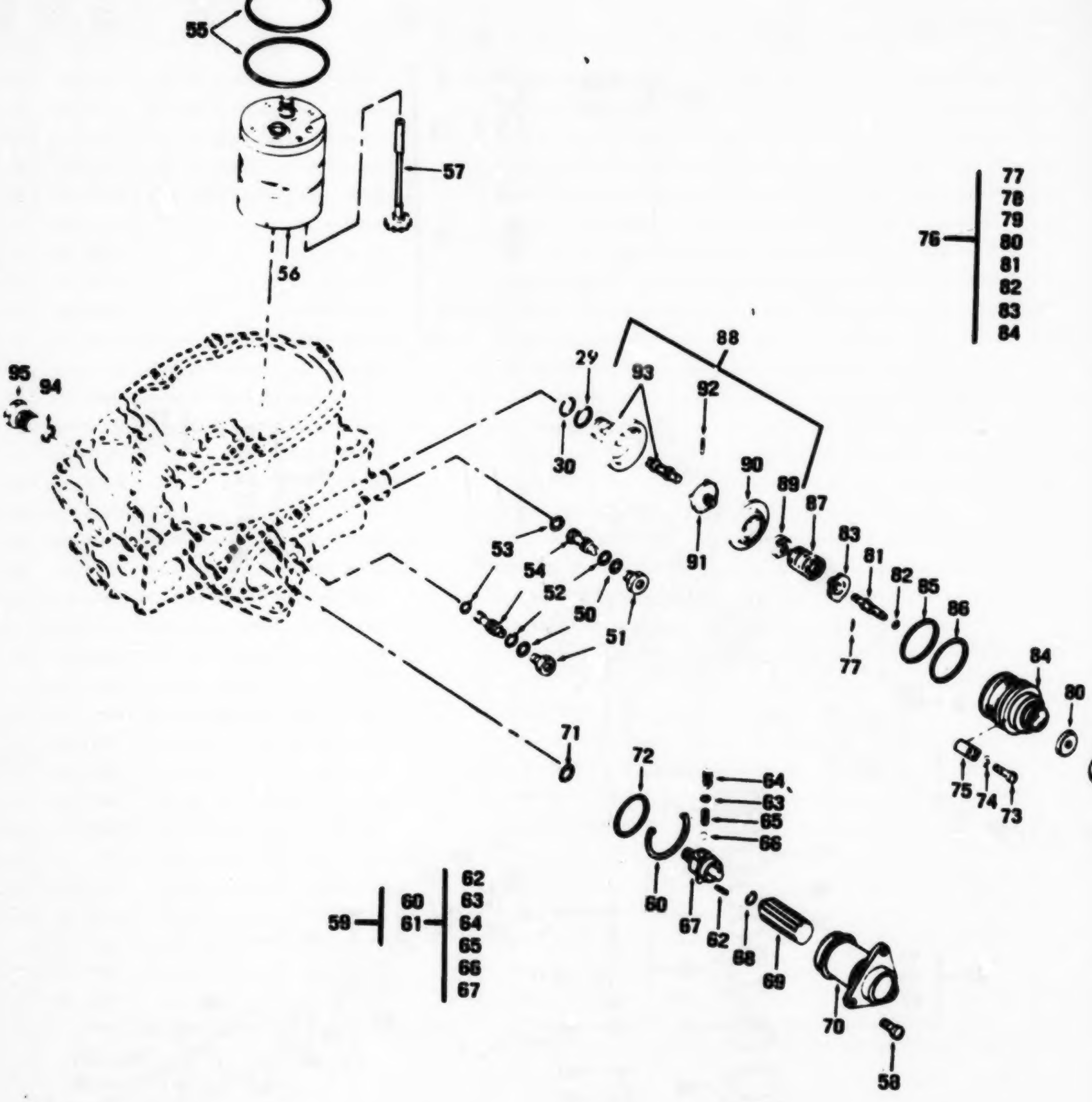

Figure 38. Fuel Housing Assembly (Sheet 2 of 5)

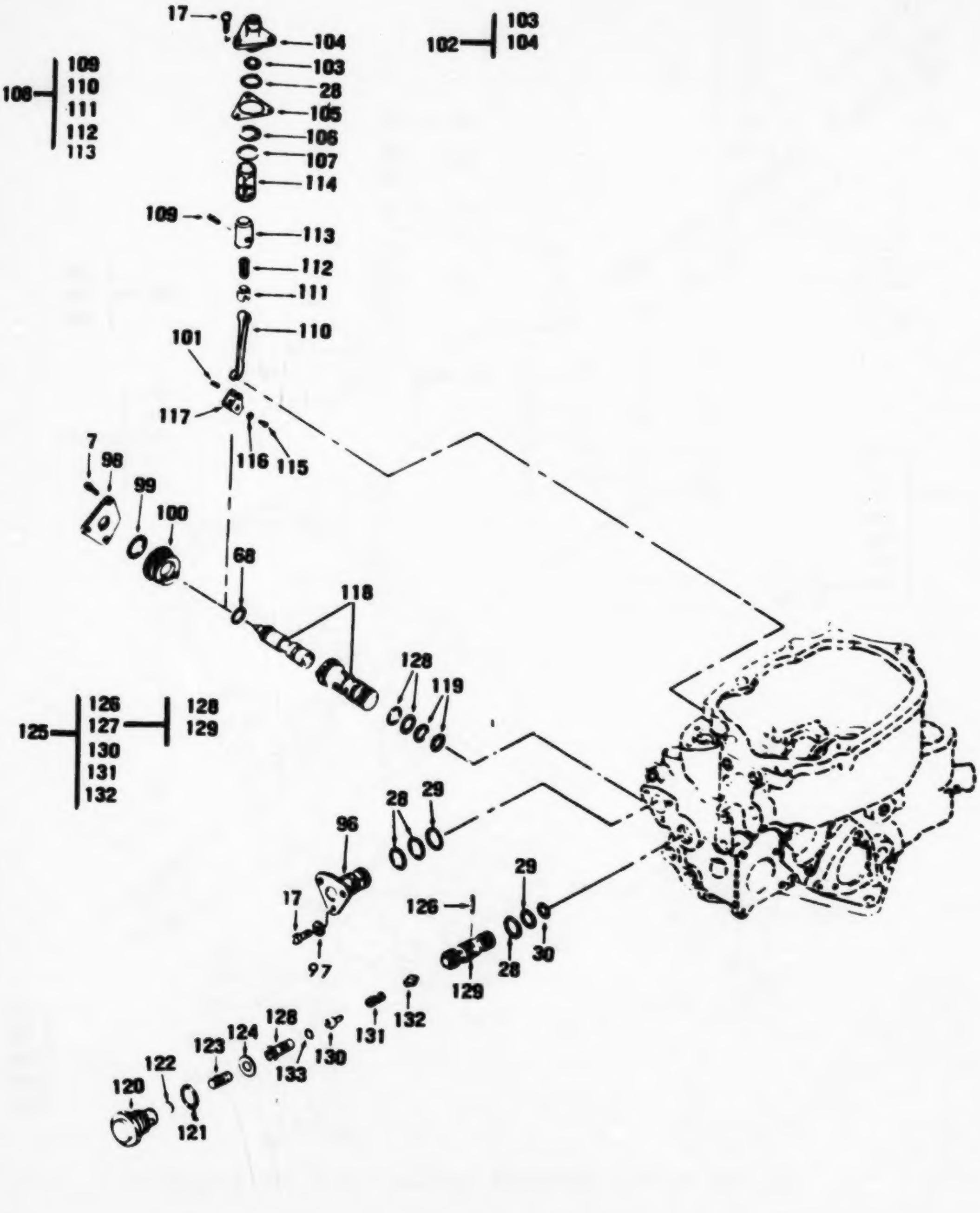

Figure 38. Fuel Housing Assembly (Sheet 3 of 5)

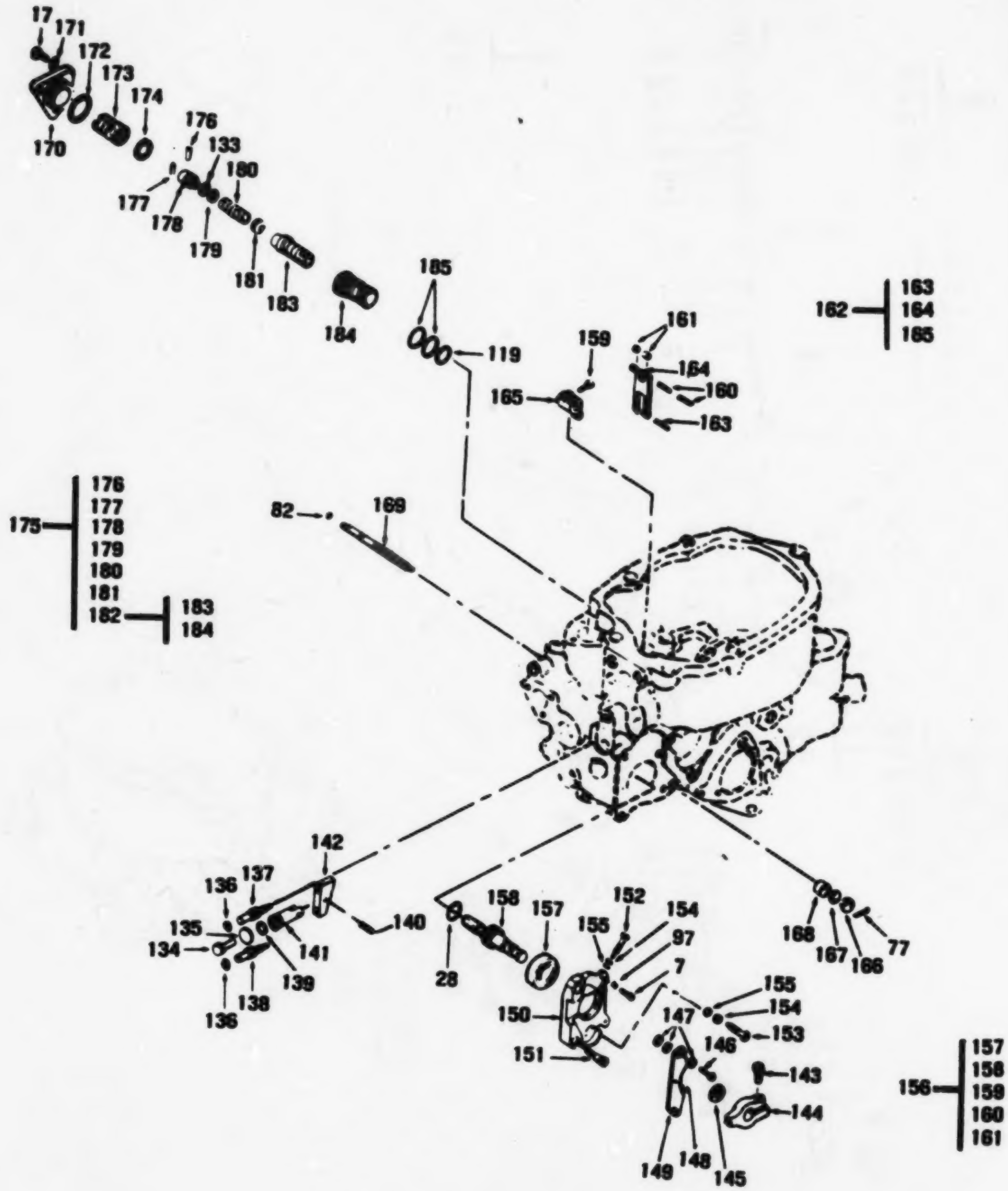

Figure 38. Fuel Housing Assembly (Sheet 4 of 5)

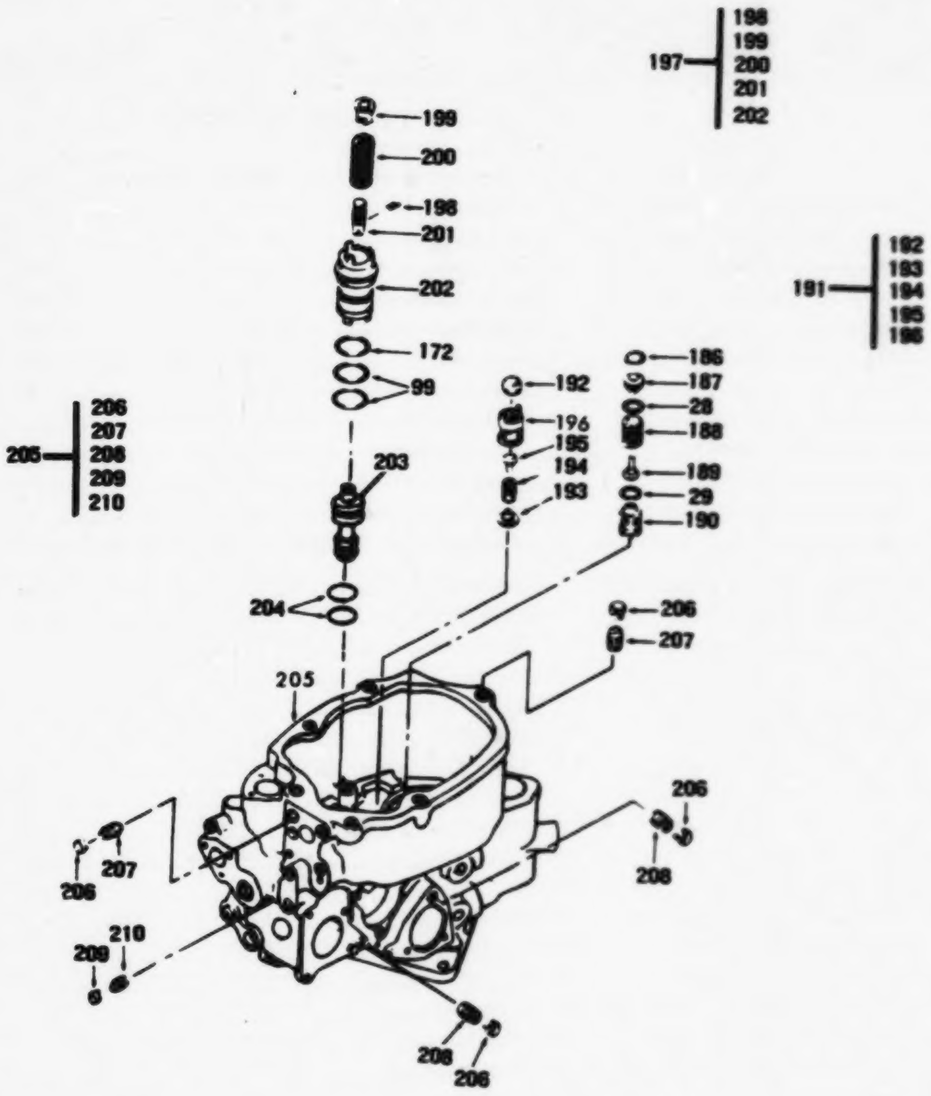

Figure 38. Fuel Housing Assembly (Sheet 5 of 5)

(1) ILLUSTRATION		(2)	(3)	(4)	(5)	(6) DESCRIPTION	(7)	(8)
(a) FIG NO	(b) ITEM NO	SMR CODE	NATIONAL STOCK NUMBER	FSCM	PART NUMBER	USABLE ON CODE	U/M	QTY INC IN UNIT
						GROUP 0406 FUEL HOUSING ASSEMBLY		
						(T53-L-13B)		
38	1	AOOOD		11599	91585	HOUSING ASSEMBLY,FU COMPLETE SEE FIG.38 FOR NHA......EZL	EA	1
38	2	PAOZZ	5365-00-503-7412	96906	MS123123	.PLUG,MACHINE THREAD....................................EZL	EA	3
38	3	PCOZZ	5330-00-262-6028	96906	MS29512-04	.PACKING,PREFORMED....................................EZL	EA	4
38	4	PAOZZ	2915-00-566-4053	11599	78406	.CAP ASSEMBLY,FLARED....................................EZL	EA	1
38	5	PAOZZ	5310-00-565-6019	11599	78405	.NUT,PLAIN,HEXAGON....................................EZL	EA	1
38	6	PAOZZ	4730-00-803-5049	96906	MS2435604	.ELBOW,TUBE....................................EZL	EA	1
38	7	PAOZZ	5305-00-535-5188	96906	MS35275-263	.SCREW,MACHINE....................................EZL	EA	7
38	8	AFFFF		11599	79165	.STRAINER,SEDIMENT....................................EZL	EA	1
38	9	PAOZZ	2915-00-075-1185	11599	79288	..FITTING ASSEMBLY....................................EZL	EA	1
38	10	PAOZZ	2915-00-075-1184	11599	79293	..RETAINER ASSEMBLY,F....................................EZL	EA	1
38	11	PAOZZ	2915-00-075-1182	11599	77970	..FILTER ELEMENT,FLUI....................................EZL	EA	1
38	12	PAOZZ	5360-00-075-1183	11599	79256	..SPRING,HELICAL,COMP....................................EZL	EA	1
38	13	PCOZZ	5330-00-250-0236	96906	MS29513-024	.PACKING,PREFORME COMPONENT OF KIT 2840-00-758-4052..EZL	EA	1
38	14	PAOZZ	5305-00-543-2753	96906	MS35266-61	.SCREW,MACHINE....................................EZL	EA	1
38	15	PAOZZ	5310-00-298-9039	88044	AN121501	.NUT,PLAIN,HEXAGON....................................EZL	EA	1
38	16	PAOZZ	2915-00-600-0726	11599	70791	.BRACKET,SOLENOID SU....................................EZL	EA	1
38	17	PAOZZ	5305-00-539-5189	96906	MS35275-264	.SCREW,MACHINE....................................EZL	EA	[illegible]
38	18	PAOZZ	5305-00-842-1938	11599	70946	.SCREW,MACHINE....................................EZL	EA	2
38	19	PAOFF	2915-00-058-2349	11599	79248	.SOLENOID AND VALVE....................................EZL	EA	1
38	20	PAFZZ	2915-00-587-0421	11599	74874	..VALVE AND SLEEVE AS....................................EZL	EA	1
38	21	XAOZZ		11599	74978	...VALVE,SOLENOID....................................EZL	EA	
38	22	XAOZZ		11599	74977	...SLEEVE,SOLENOID VAL....................................EZL	EA	
38	23	PAFZZ	2915-00-577-1051	11599	74979	..INSERT,SOLENOID VAL....................................EZL	EA	
38	24	PAFZZ	3110-00-183-7537	96906	MS19060-17	..BALL,BEARING....................................EZL	EA	
38	25	PAFZZ	5360-00-075-1187	11599	78989	..SPRING,HELICAL,COMP....................................EZL	EA	
38	26	PAOZZ	2925-00-072-1060	11599	79247	..SOLENOID,ELECTRICAL....................................EZL	EA	
38	27	PAFZZ	5365-00-758-4214	11599	70970	.SHIM....................................EZL	EA	
38	28	PCFZZ	5330-00-248-3845	96906	MS29513-016	.PACKING,PREFORMED....................................EZL	EA	1
38	29	PAOZZ	5330-00-460-5759	96906	MS29513-015	.PACKING,PREFORME....................................EZL	EA	
38	30	PCOZZ	5330-00-248-3840	96906	MS29513-014	.PACKING,PREFORMED....................................EZL	EA	
38	31	PCFZZ	5330-00-248-3838	96906	MS29513-013	.PACKING,PREFORMED....................................EZL	EA	
38	32	PAOZZ	5365-00-618-2106	11599	47687	.SPACER,RING....................................EZL	EA	
38	33	PAOZZ	2915-01-018-3826	11599	102171	.CLUTCH,FUEL HOUSING....................................EZL	EA	
38	34	PAOZZ	5315-01-018-3854	11599	102204	.PIN,STRAIGHT,HEADL....................................EZL	EA	
38	35	PAFZZ	2915-00-618-5828	11599	43607	.PLATE,RETAINING,SHA....................................EZL	EA	

(1) ILLUSTRATION (a) FIG NO	(b) ITEM NO	(2) SMR CODE	(3) NATIONAL STOCK NUMBER	(4) FSCM	(5) PART NUMBER	(6) DESCRIPTION USABLE ON CODE	(7) U/M	(8) QTY INC IN UNIT
38	36	PAFZZ	5305-00-701-5075	96906	MS51959-64	.SCREW,MACHINE..EZL	EA	4
38	37	PAFZZ	5360-00-653-1454	11599	24150	.SPRING,HELICAL,COMP..................................EZL	EA	1
38	38	PAFZZ	2915-00-992-1165	11599	75151	.PLATE,SEAL...EZL	EA	1
38	39	PAFZZ	5310-00-550-4271	11599	23535	.WASHER,FLAT..EZL	EA	1
38	40	PAFZZ	5310-00-580-3173	11599	23532	.WASHER,KEY...EZL	EA	1
38	41	PAFZZ	2915-00-992-1150	11599	75154	.RING,DIAPHRAGM RETA..................................EZL	EA	1
38	42	PAFZZ	2915-00-993-4965	11599	75157	.SEAL ASSEMBLY..EZL	EA	1
38	43	PAFZZ	2915-01-018-3827	11599	91620	.SHAFT ASSY,FUEL POU..................................EZL	EA	1
38	44	PCFZZ	5330-00-248-3837	96906	MS29513-110	..PACKING,PREFORMED...................................EZL	EA	1
38	45	XADZZ		11599	43574	..WASHER,THRUST.......................................EZL	EA	1
38	46	XAFZZ		11599	87235	..SHAFT,DRIVE...EZL	EA	1
38	47	PAFZZ	5360-00-756-7092	11599	43825	.SPRING,HELICAL,COMP..................................EZL	EA	1
38	48	PAFZZ	5365-00-701-7321	11599	75242	.SHIM...EZL	EA	1
38	49	PAFZZ	2915-00-671-5375	11599	76081	.SHAFT,SHOULDERED.....................................EZL	EA	1
38	50	PCFZZ	5330-00-263-8011	96906	MS29512-03	.PACKING,PREFORME.....................................EZL	EA	2
38	51	PAFZZ	5365-00-818-7050	11599	43725	.PLUG,MACHINE THREAD..................................EZL	EA	2
38	52	PADZZ	5330-00-531-2335	96906	MS29513-005	.PACKING,PREFORME.....................................EZL	EA	2
38	53	PCDZZ	5330-00-248-3832	96906	MS29513-007	.PACKING,PREFORMED....................................EZL	EA	2
38	54	PADZZ	2915-00-992-1136	11599	74823	.STANDPIPE..EZL	EA	2
38	55	PADZZ	5330-00-460-5803	11599	46386	.PACKING,PREFORME.....................................EZL	EA	2
38	56	PBOCD	4320-00-992-1154	11599	87352	.PUMP,ROTARY SEE FIG.49 FOR BREAKDOWN.................EZL	EA	1
38	57	PADZZ	2915-00-992-1133	11599	73875	.GEAR AND SHAFT ASSE..................................EZL	EA	1
38	58	PADZZ	5305-00-150-5265	88044	AN503-416-8	.SCREW, MACHINE.......................................EZL	EA	4
38	59	ACDCD		11599	76721	.FILTER,FLUID,PRESSU..................................EZL	EA	1
38	60	PADZZ	5365-00-756-4306	11599	46286	..RING,RETAINING......................................EZL	EA	1
38	61	PADCD	2915-00-992-1146	11599	76722	..HOUSING ASSEMBLY,BY.................................EZL	EA	1
38	62	PADZZ	5315-00-844-5644	96906	MS16562-194	...PIN,SPRING...EZL	EA	1
38	63	PCDZZ	5330-00-248-3833	96906	MS29513-008	...PACKING,PREFORMED..................................EZL	EA	1
38	64	PADZZ	5340-00-707-6891	11599	46270	...RETAINER,VALVE.....................................EZL	EA	1
38	65	PADZZ	5360-00-587-5536	11599	75804	...SPRING,HELICAL,COMP................................EZL	EA	1
38	66	PADZZ	3110-00-595-7002	11599	28970-6	...BALL,BEARING.......................................EZL	EA	1
38	67	PADZZ	2915-00-800-8818	11599	46271	...HOUSING,VALVE......................................EZL	EA	1
38	68	PCDZZ	5330-00-248-3836	96906	MS29513-012	..PACKING,PREFORMED...................................EZL	EA	2
38	69	PADZZ	2915-00-756-7083	11599	28876	..FILTER ELEMENT,FLUI COMPONENT OF KIT 2840-00-758-4052.. EZL	EA	1
38	70	PADZZ	2915-00-756-4308	11599	48662	..COVER ASSEMBLY,STRA.................................EZL	EA	1
38	71	PCDZZ	5330-00-248-3835	96906	MS29513-010	..PACKING,PREFORMED COMPONENT OF KIT 2840-00-758-4052....EZL	EA	1
38	72	PCDZZ	5330-00-265-1088	96906	MS29513-027	..PACKING,PREFORME COMPONENT OF KIT 2840-00-758-4052.....EZL	EA	1
38	73	PAFZZ	5305-00-535-9147	96906	MS35275-281	.SCREW,MACHINE..EZL	EA	3

(1) ILLUSTRATION (a) FIG NO	(b) ITEM NO	(2) SMR CODE	(3) NATIONAL STOCK NUMBER	(4) FSCM	(5) PART NUMBER	(6) DESCRIPTION USABLE ON CODE	(7) U/M	(8) QTY INC IN UNIT
38	74	PADZZ	5310-00-167-0725	80049	555-4	.WASHER,CONVEX....................F7L	EA	[illegible]
38	75	PADZZ	2915-00-671-7885	11599	43583	.CLAMP,RIM WRENCHING....................FZL	EA	3
38	76	PADDD	2915-00-758-8426	11599	78561	.HOUSING ASSY,MAIN PRESSURE....................EZL	EA	1
38	77	PADZZ	5315-00-855-6605	96906	MS24665-22	..PIN,COTTER....................FZL	EA	[illegible]
38	78	PADZZ	5365-00-484-6511	11599	12C27-1	..SHIM 0.009 IN.THK....................FZL	EA	1
38	79	PADZZ	5365-00-484-6512	11599	12C27-2	..SHIM 0.010 IN.THK....................FZL	EA	1
38	78	PADZZ	5310-00-484-6513	11599	12C27-3	..WASHER,FLAT 0.020 IN.THK....................FZL	EA	1
38	79	PADZZ	2915-00-671-5475	11599	76714	..CAP,HAND ADJUSTING....................FZL	EA	1
38	80	PADZZ	2915-00-671-7532	11599	25265	..PLATE,DETENT,NUMBER....................FZL	EA	1
38	81	PADZZ	2915-00-671-7875	11599	25266	..SCREW,ADJUSTING....................FZL	EA	1
38	82	PCDZZ	5330-00-584-1100	96906	MS9021-006	..PACKING,PREFORME....................FZL	EA	2
38	83	PADZZ	2915-00-880-3143	11599	43795	..HOLDER,SPRING....................FZL	EA	1
38	84	PADZZ	2915-00-588-5355	11599	78550	..HOUSING,MAIN REGULA VALVE....................FZL	EA	1
38	85	PCDZZ	5330-00-265-1076	96906	MS29513-128	.PACKING,PREFORME....................EZL	EA	[illegible]
38	86	PCDZZ	5330-00-265-1078	96906	MS29513-127	.PACKING,PREFORMED....................FZL	EA	[illegible]
38	87	PADZZ	5360-00-828-2526	11599	48504	.SPRING,HELICAL,COMP....................FZL	EA	[illegible]
38	88	ADDDD		11599	83402	.VALVE AND DIAPHRAGM....................FZL	EA	[illegible]
38	89	PCDZZ	5310-00-567-5819	11599	78548	..NUT,PLAIN,ROUND....................FZL	EA	[illegible]
38	90	PADZZ	2915-00-647-1704	11599	78558	..DIAPHRAGM ASSY,VALV....................FZL	EA	[illegible]
38	91	PADZZ	2915-00-544-8303	11599	82576	..STOP,PRESSURE REGUL....................FZL	EA	[illegible]
38	92	PADZZ	5315-00-547-3555	11599	82449	..PIN,CLEVIS....................FZL	EA	[illegible]
38	93	PADZZ	2915-00-545-5851	11599	83401	..SLEEVE AND VALVE AS....................FZL	EA	[illegible]
38	94	PCDZZ	5330-00-248-3829	96906	MS29513-111	.PACKING,PREFORMED....................EZL	EA	[illegible]
38	95	PADZZ	5365-00-820-5412	11599	28563-6	.PLUG,MACHINE THREAD....................FZL	EA	[illegible]
38	96	PADZZ	2915-00-858-0113	11599	70243	.PLUG,DUMMY,EMERGENC....................FZL	EA	[illegible]
38	97	PADZZ	5310-00-167-0812	88044	AN960C10L	.WASHER,FLAT....................FZL	EA	[illegible]
38	98	PADZZ	2915-00-577-1065	11599	74565	.PLATE,RETAINING....................FZL	EA	[illegible]
38	99	PCDZZ	5330-00-250-0224	96906	MS29513-020	.PACKING,PREFORMED....................FZL	EA	[illegible]
38	100	PADZZ	2915-00-587-0419	11599	74831	.COVER,EMERGENCY MET....................FZL	EA	[illegible]
38	101	PADZZ	5315-00-702-5816	11599	75573	.PIN,STRAIGHT,HEADLE....................EZL	EA	[illegible]
38	102	PADDD	2915-00-553-4547	11599	75208	.FITTING AND STOPCOC....................FZL	EA	[illegible]
38	103	PADZZ	5330-00-647-2585	11599	46501	..GASKET....................FZL	EA	[illegible]
38	104	XADZZ		11599	75018	..FITTING,FUEL OUTLET....................FZL	EA	[illegible]
38	105	PADZZ	5365-00-819-0015	11599	47465	.SHIM....................FZL	EA	[illegible]
38	106	PADZZ	5330-00-618-6585	11599	45765	.RETAINER,PACKING....................FZL	EA	[illegible]
38	107	PADZZ	5365-00-647-3024	11599	47496	.SHIM....................FZL	EA	[illegible]
38	108	PADDD	2915-00-867-6424	11599	78277	.STOPCOCK ASSY....................FZL	EA	[illegible]
38	109	PADZZ	2915-00-985-5350	11599	74571	..SHAFT,STRAIGHT....................FZL	EA	[illegible]
38	110	PADZZ	2915-00-555-0851	11599	78276	..LINK,CONNECTING....................EZL	EA	[illegible]
38	111	PADZZ	2915-00-671-5454	11599	45766	..PLUNGER,DETENT....................FZL	EA	[illegible]

(1) ILLUSTRATION (a) FIG NO.	(b) ITEM NO.	(2) SMR CODE	(3) NATIONAL STOCK NUMBER	(4) FSCM	(5) PART NUMBER	(6) DESCRIPTION USABLE ON CODE	(7) U/M	(8) QTY INC IN UNIT
38	112	PADZZ	5360-00-205-5505	11599	45765	..SPRING,HELICAL,COMP..............................EZL	EA	1
38	113	PADZZ	2915-00-551-0534	11599	74831	..VALVE,STOPCOCK..............................EZL	EA	1
38	114	PADZZ	2915-00-577-1050	11599	74757	.SLEEVE,STOPCOCK..............................EZL	EA	1
38	115	PADZZ	5305-00-858-6503	11599	74168	.SCREW,SELF-LOCKING..............................EZL	EA	1
38	116	PADZZ	5340-00-647-2562	11599	46803	.CUP,LOCKING..............................EZL	EA	1
38	117	PADZZ	2915-00-553-4552	11599	75060	.LEVER,METERING,STOP..............................EZL	EA	1
38	118	PADZZ	2915-00-956-7428	11599	76140	.SLEEVE AND VALVE AS..............................EZL	EA	1
38	119	PCDZZ	5330-00-248-3842	96906	MS29513-017	.PACKING,PREFORMED..............................EZL	EA	33
38	120	PADZZ	2915-00-551-0535	11599	74828	.COVER,THREADED,FOOT..............................EZL	EA	1
38	121	PADZZ	5330-00-283-8032	96906	MS29512-10	.PACKING,PREFORME COMPONENT OF KIT 2840-00-758-4052......EZL	EA	1
38	122	PADZZ	5365-00-647-2765	11599	46301	.SHIM..............................EZL	EA	1
38	123	PADZZ	5360-00-842-3783	11599	46299	.SPRING,HELICAL,COMP..............................EZL	EA	1
38	124	PADZZ	5365-00-647-3023	11599	70035	.SHIM..............................EZL	EA	1
38	125	PAOOO	2915-00-757-1535	11599	75015	.VALVE ASSEMBLY,FOOT..............................EZL	EA	1
38	126	PADZZ	5315-00-702-5818	11599	75020	..PIN,STRAIGHT,HEADLE..............................EZL	EA	1
38	127	PADZZ	2915-00-552-1141	11599	75022	..SLEEVE AND FOOT VAL..............................EZL	EA	1
38	128	XADZZ		11599	75025	...VALVE,FOOT..............................EZL	EA	1
38	129	XADZZ		11599	75023	...SLEEVE,FOOT VALVE A..............................EZL	EA	1
38	130	PADZZ	2915-00-552-1140	11599	75021	..RETAINER,CHECK VALV..............................EZL	EA	1
38	131	PADZZ	5360-00-704-5335	11599	46258	..SPRING,HELICAL,COMP..............................EZL	EA	1
38	132	PADZZ	2915-00-552-1142	11599	75024	..VALVE,FUEL CONTROL..............................EZL	EA	1
38	133	PCDZZ	5330-00-248-3831	96906	MS29513-011	.PACKING,PREFORMED..............................EZL	EA	2
38	134	PADZZ	5306-00-833-7011	11599	46322	.BOLT,MACHINE..............................EZL	EA	1
38	135	PADZZ	5310-00-831-2338	11599	47516	.WASHER,FLAT..............................EZL	EA	1
38	136	PCDZZ	5330-00-580-2278	96906	MS9021-010	.PACKING,PREFORMED..............................EZL	EA	2
38	137	PADZZ	5305-00-831-4078	11599	46324	.SETSCREW MINIMUM..............................EZL	EA	1
38	138	PADZZ	5305-00-831-4078	11599	46324	.SETSCREW MAXIMUM..............................EZL	EA	1
38	139	PCDZZ	5330-00-580-6518	96906	MS9021-011	.PACKING,PREFORME..............................EZL	EA	1
38	140	XBDZZ	5315-00-600-0752	11599	46325	.PIN,GROOVED,HEAD..............................EZL	EA	1
38	141	PADZZ	2915-00-577-1066	11599	75059	.RETAINER,MANUAL CAM..............................EZL	EA	1
38	142	PADZZ	2915-00-585-4241	11599	83842	.CAM,THROTTLE,ADJUST..............................EZL	EA	1
38	143	PADZZ	5305-00-145-0599	11599	72066	.SCREW,MACHINE..............................EZL	EA	1
38	144	PADZZ	2915-00-555-0886	11599	78385	.LEVER,THROTTLE,SHAF..............................EZL	EA	1
38	145	PADZZ	5310-00-831-2339	11599	70490	.WASHER,FLAT..............................EZL	EA	1
38	146	PADZZ	5305-00-529-4334	96906	MS35275-214	.SCREW,MACHINE..............................EZL	EA	2
38	147	PADZZ	5310-00-782-1345	96906	MS15795-804	.WASHER,FLAT..............................EZL	EA	6
38	148	PADZZ	5315-00-823-8740	96906	MS16562-192	.PIN,SPRING..............................EZL	EA	1
38	149	XBDZZ	2915-00-858-8461	11599	73363	.PLATE,THROTTLE INDI..............................EZL	EA	1
38	150	PADZZ	2915-00-566-5257	11599	78390	.RETAINER,BEARING TH..............................EZL	EA	1

(1) ILLUSTRATION		(2)	(3)	(4)	(5)	(6)	(7)	(8)
(a) FIG NO.	(b) ITEM NO	SMR CODE	NATIONAL STOCK NUMBER	FSCM	PART NUMBER	DESCRIPTION / USABLE ON CODE	U/M	QTY INC IN UNIT
38	151	PADZZ	5305-00-853-1702	11599	46367	.SCREW,SHOULDER.........................F7L	EA	2
38	152	PADZZ	5305-00-837-7012	11599	46782	.SETSCREW MAXIMUM.........................F7L	EA	1
38	153	PADZZ	5305-00-837-7012	11599	46782	.SETSCREW MINIMUM.........................F7L	EA	1
38	154	PADZZ	5310-00-831-2320	11599	28514-6	.NUT,PLAIN,HEXAGON.........................F7L	EA	2
38	155	PADZZ	5310-00-831-2323	11599	23431	.WASHER,FLAT.........................F7L	EA	2
38	156	AODDD		11599	78222	.SHAFT AND BEARING A.........................F7L	EA	1
38	157	PADZZ	3110-00-018-1979	11599	46474	..BEARING,BALL,AIRFRA.........................F7L	EA	1
38	158	PADZZ	2915-00-858-8460	11599	77421	..SHAFT ASSEMBLY,THR.........................F7L	EA	1
38	159	PADZZ	5305-00-542-8431	96906	MS35275-245	..SCREW,MACHINE.........................F7L	EA	1
38	160	PADZZ	5315-00-583-0909	11599	74947	..PIN,STRAIGHT,HEADLE.........................F7L	EA	2
38	161	PADZZ	3120-00-828-0949	11599	74849	..ROLLER,LINEAR-ROTAR.........................F7L	EA	1
38	162	AODDD		11599	75213	.LEVER AND FOLLOWER.........................F7L	EA	1
38	163	PADZZ	5315-00-577-1082	11599	74950	..PIN,GROOVED,HEAD.........................F7L	EA	1
38	164	PADZZ	2915-00-593-4953	11599	75058	..LEVER,MANUAL CAM FO.........................F7L	EA	1
38	165	PADZZ	2915-00-587-0420	11599	74850	..LEVER,MANUAL CAM.........................F7L	EA	1
38	166	PADZZ	5310-00-167-1344	88044	AN315-4R	.NUT,PLAIN,HEXAGON.........................F7L	EA	1
38	167	PAFZZ	5310-00-515-7449	88044	AN960C416L	.WASHER,FLAT.........................F7L	EA	1
38	168	PADZZ	5365-00-707-8888	11599	46333	.SPACER,SLEEVE.........................F7L	EA	1
38	169	PADZZ	2915-00-592-1160	11599	75046	.VALVE,FLOW ADJUSTME.........................F7L	EA	1
38	170	PADZZ	2915-00-098-7088	11599	75144	.COVER,ACCESS.........................F7L	EA	1
38	171	PADZZ	5310-00-025-7770	11599	12738	.WASHER,FLAT.........................F7L	EA	1
38	172	PCDZZ	5330-00-250-0227	96906	MS29513-021	.PACKING,PREFORMED.........................F7L	EA	[illegible]
38	173	PADZZ	5360-00-587-7115	11599	46284	.SPRING,HELICAL,COMP.........................F7L	EA	[illegible]
38	174	PADZZ	5365-00-647-2540	11599	46256	.SHIM.........................F7L	EA	[illegible]
38	175	AODDD		11599	76123	.VALVE ASSY,EMERGENC.........................F7L	EA	[illegible]
38	176	PADZZ	5315-00-990-2596	11599	75860	..PIN,STRAIGHT,HEADLE.........................F7L	EA	[illegible]
38	177	PADZZ	2915-00-710-7939	11599	46255	..SLEEVE,PIN RETAININ.........................F7L	EA	[illegible]
38	178	PADZZ	5340-00-587-7114	11599	46252	..SEAT,SPRING,HIGH.........................F7L	EA	[illegible]
38	179	PADZZ	5365-00-647-2799	11599	46257	..SHIM.........................F7L	EA	[illegible]
38	180	PADZZ	5360-00-893-1700	11599	46283	..SPRING,HELICAL,COMP.........................F7L	EA	[illegible]
38	181	PADZZ	4820-00-709-0429	11599	75013	..VALVE,HIGH PRESS.........................F7L	EA	[illegible]
38	182	PADZZ	2915-00-592-1143	11599	76124	..VALVE AND SLEEVE AS.........................F7L	EA	[illegible]
38	183	XADZZ		11599	76126	...VALVE.........................F7L	EA	[illegible]
38	184	XADZZ		11599	76125	...SLEEVE.........................F7L	EA	[illegible]
38	185	PCDZZ	5330-00-248-3848	96906	MS29513-018	.PACKING,PREFORMED.........................F7L	EA	[illegible]
38	186	PADZZ	5365-00-209-4798	96906	MS16625-4077	.RING,RETAINING.........................F7L	EA	[illegible]
38	187	PADZZ	2915-00-592-5762	11599	75008	.RETAINER,CHECK VALV.........................F7L	EA	[illegible]
38	188	PADZZ	5360-00-842-2419	11599	46268	.SPRING,HELICAL,COMP.........................F7L	EA	[illegible]
38	189	PADZZ	2915-00-951-0989	11599	75015	.VALVE,STEMMED CHECK.........................F7L	EA	[illegible]
38	190	PADZZ	2915-00-966-5298	11599	75012	.SLEEVE,CHECK VALVE.........................F7L	EA	[illegible]

(1) ILLUSTRATION (a) FIG NO	(b) ITEM NO	(2) SMR CODE	(3) NATIONAL STOCK NUMBER	(4) FSCM	(5) PART NUMBER	(6) DESCRIPTION USABLE ON CODE	(7) U/M	(8) QTY INC IN UNIT
38	191	PADCC	2915-00-952-1153	11599	75805	.VALVE ASSEMBLY,CHEC....................................FZL	EA	1
38	192	PADZZ	2915-00-643-1480	11599	78336	..STRAINER ELEMENT,SE...................................FZL	EA	1
38	193	XADZZ		11599	75797	..GUIDE,CHECK VALVE.....................................FZL	EA	1
38	194	XADZZ		11599	75799	..SPRING,HELICAL,COMP...................................FZL	EA	1
38	195	XADZZ		11599	75796	..VALVE,CHECK...FZL	EA	1
38	196	XADZZ		11599	75798	..SLEEVE,CHECK VALVE....................................FZL	EA	1
38	197	PADCD	2915-01-016-3821	11599	88553	.VALVE ASSY,MAIN MET....................................FZL	EA	1
38	198	PADZZ	5315-00-718-6753	11599	46403	..PIN,LOCK..FZL	EA	1
38	199	PADZZ	2915-00-954-3258	11599	75117	..SEAT,SPRING...FZL	EA	1
38	200	PADZZ	5360-00-838-1599	11599	46364	..SPRING,HELICAL,COMP...................................FZL	EA	1
38	201	XADZZ		11599	81196	..VALVE,MAIN METERING...................................FZL	EA	1
38	202	XADZZ		11599	75978	..SLEEVE AND PLUG ASS...................................FZL	EA	1
38	203	ACDCD		11599	75178	.VALVE AND SLEEVE AS SEE FIG.40 FOR BREAKDOWN........FZL	EA	1
38	204	PCDZZ	5330-00-248-3845	96906	MS29513-019	.PACKING,PREFORME.......................................FZL	EA	2
38	205	PBDCD	2915-00-828-3417	11599	87890	.HOUSING,FUEL CONTRO....................................FZL	EA	1
38	206	PADZZ	5365-00-880-8884	91547	2-300-186-01	..RING,LOCK,KEYED.......................................FZL	EA	16
38	207	PADZZ	5340-00-880-8746	11599	28904-3	..INSERT,SCREW THR......................................FZL	EA	6
38	208	PADZZ	5340-00-847-4558	11599	28904-10	..INSERT,SCREW THREAD...................................FZL	EA	13
38	209	PADZZ	5365-00-633-1854	01556	RR5A15	..RING,LOCK,KEYED.......................................FZL	EA	1
38	210	XBDZZ	5340-00-875-8009	11599	28904-9	..INSERT,SCREW THREAD...................................FZL	EA	2
38		PAOZZ	2840-00-758-4052	91547	1-200-030-27	PARTS KIT,FUEL SYST SYSTEMS SEE FUNCTIONAL GROUP 50 FOR COMPONENTS...............................FZL	EA	1

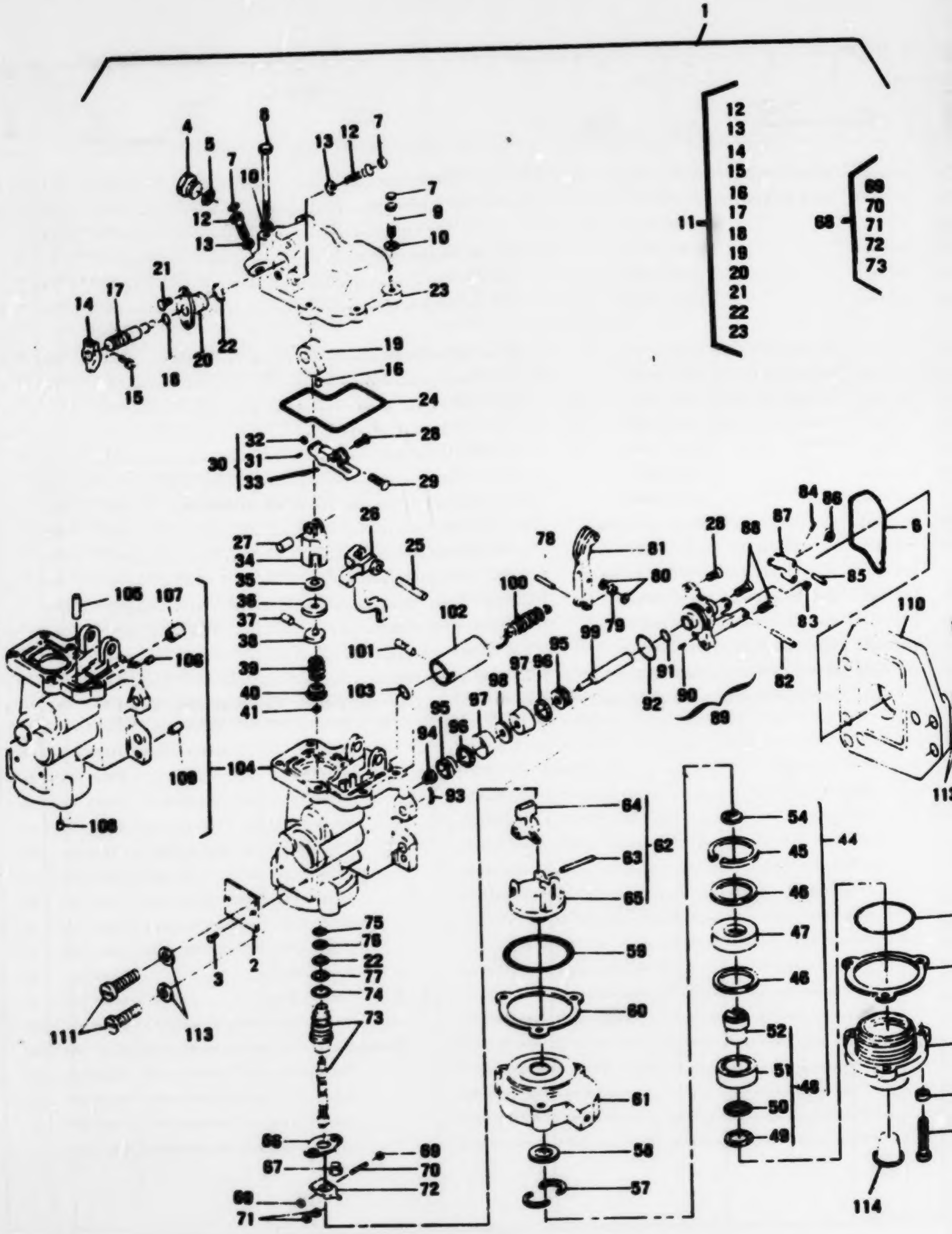

Figure 39. Governor Assembly, Overspeed

(1) ILLUSTRATION (a) FIG NO	(b) ITEM NO	(2) SMR CODE	(3) NATIONAL STOCK NUMBER	(4) FSCM	(5) PART NUMBER	(6) DESCRIPTION USABLE ON CODE	(7) U/M	(8) QTY INC IN UNIT
						GROUP 0406 GOVERNOR ASSEMBLY,OVERSPEED		
35	1	PAOOO	2915-01-005-5156	11599	103100A1	GOVERNOR OVERSPEED SEE FIG.34 FOR NHA	EA	1
35	2	PAOZZ	9905-00-068-0774	11599	75474	.PLATE,IDENTIFICATIO	EA	1
35	3	XDOZZ	5305-00-753-7077	96906	MS24621-2	.SCREW,TAPPING,THREA	EA	2
35	4	PAOZZ		11599	28585-4	.PLUG,MACHINE THREAD	EA	1
35	5	PCOZZ	5330-00-263-8028	96906	MS29512-04	.PACKING,PREFORMED	EA	1
35	6	PCOZZ	5330-00-802-1360	96906	MS9021-034	.PACKING,PREFORME	EA	1
35	7	PAOZZ	5340-00-879-0547	11599	10335	.SEAL,ANTIPILFERAGE	EA	1
35	8	PAOZZ	5305-00-085-3105	11599	44036	.SCREW,MACHINE	EA	2
35	9	PAOZZ	5305-00-939-5190	96906	MS35275-265	.SCREW,MACHINE	EA	4
35	10	PAOZZ	5310-00-025-7770	11599	12738	.WASHER,FLAT	EA	4
35	11	AOOOO		11599	77402	.COVER ASSEMBLY,COVE	EA	1
35	12	PAOZZ	5306-00-805-6503	11599	72372	..BOLT,MACHINE	EA	2
35	13	PAOZZ	5310-00-148-2501	11599	28514-5	..NUT,PLAIN,HEXAGON	EA	2
35	14	PAOZZ	2915-00-888-9671	11599	74633	..LEVER,STOP	EA	1
35	15	PAOZZ	5305-00-688-9932	11599	73827	..SCREW,MACHINE	EA	1
35	16	PAOZZ	5305-00-600-0725	11599	48888	..SETSCREW	EA	1
35	17	PAOZZ	2915-00-955-0889	11599	77867	..SHAFT,MANUAL CONTRO	EA	1
35	18	PCOZZ	5330-00-248-3835	96906	MS29513-010	..PACKING,PREFORMED	EA	3
35	19	PAOZZ	2915-00-955-0890	11599	77866	..CAP,MANUAL CONTROL	EA	1
35	20	PAOZZ	2915-00-966-9333	11599	77403	..COVER,MANUAL CONTRO	EA	1
35	21	PAOZZ	5305-00-701-5069	96906	MS51959-60	..SCREW,MACHINE	EA	2
35	22	PCOZZ	5330-00-248-3838	96906	MS29513-013	..PACKING,PREFORMED	EA	2
35	23	PAOZZ	2915-00-960-1090	11599	77401	..COVER,UPPER	EA	1
35	24	PAOZZ	2915-00-770-7623	11599	41152	.SEAL,RUBBER,OVERSPE	EA	1
35	25	PAOZZ	5315-00-879-7647	11599	71832	.PIN,STRAIGHT,HEADLE	EA	1
35	26	PAOZZ	2915-00-966-9354	11599	75885	.LEVER,FEEDBACK	EA	1
35	27	PAOZZ	5315-00-068-2951	11599	75085	.PIN,STRAIGHT,HEA	EA	1
35	28	PAOZZ	5305-00-939-9222	96906	MS35275-242	.SCREW,MACHINE	EA	2
35	29	PAOZZ	5305-00-673-3310	11599	41137	.SCREW,MACHINE	EA	1
35	30	PAOOO	2915-00-977-1049	11599	76282	.LEVER AND CLAMP	EA	1
35	31	PAOZZ	5315-00-068-1537	11599	74907	..PIN,STRAIGHT,HEADLE	EA	1
35	32	PAOZZ	3120-00-969-5751	11599	75092	..BEARING,SLEEVE	EA	1
35	33	XAOZZ		11599	75857	..LEVER,TOPPING COVER	EA	1
35	34	PAOZZ	2915-00-953-0562	11599	75199	.GUIDE,SPRING	EA	1
35	35	PAOZZ	5365-00-717-3478	11599	74130	.SHIM	EA	1
35	36	PAOZZ	2915-00-888-3385	11599	74134	.PLUG,GUIDE	EA	1
35	37	PAOZZ	5315-00-754-2114	96906	MS51923-426	.PIN,SPRING	EA	1
35	38	PAOZZ	2915-00-987-2105	11599	74133	.SEAT AND PIN ASSEMB	EA	1
35	39	PAOZZ	5360-00-964-7384	11599	76090	.SPRING,HELICAL,COMP	EA	1

(1) ILLUSTRATION (a) FIG NO	(b) ITEM NO	(2) SMR CODE	(3) NATIONAL STOCK NUMBER	(4) FSCM	(5) PART NUMBER	(6) DESCRIPTION USABLE ON CODE	(7) U/M	(8) QTY INC IN UNIT
39	40	PADZZ	2915-00-795-5469	11599	71781	.SEAT,HELICAL COMPRE	EA	
39	41	PADZZ	2915-00-991-0971	11599	75854	.RETAINER AND SUPPOR	EA	
39	42	PADZZ	5305-00-939-5209	96906	MS35275-268	.SCREW,MACHINE	EA	
39	43	PADZZ	5310-00-647-2065	11599	46791	.WASHER,RECESSED	EA	
39	44	PAODD	2915-00-012-8172	11599	41766	.COVER ASSEMBLY,LOWE	EA	
39	45	PADZZ	5365-00-684-3048	96906	MS16627-4137	..RING,RETAINING	EA	
39	46	PADZZ	5365-00-647-3006	11599	47223	..SHIM	EA	
39	47	PADZZ	5330-00-088-3047	80201	900129	..SEAL,PLAIN ENCASED	EA	
39	48	ADDCO		11599	41821	..COUPLING ASSEMBLY,C	EA	
39	49	PADZZ	5365-00-095-3119	79136	5108-59M	...RING,RETAINING	EA	
39	50	PADZZ	5365-00-647-2844	11599	46589	...SHIM	EA	
39	51	PADZZ	3110-00-929-3685	11599	4119090	...BEARING,BALL,ANNULA	EA	
39	52	PADZZ	2915-00-672-0821	11599	41116	...COUPLING,SPLINED,GOV ... EZ6,EZ7	EA	
39	52	PADZZ	2915-01-018-2451	11599	51949	...COUPLING SUBASSEMBL ... EZL	EA	
39	53	PADZZ	2915-00-672-4174	11599	41111	..COVER,OVERSPEED GOV	EA	
39	54	PADZZ	2915-00-672-0870	11599	41822	.COUPLING,GOVERNOR C ... EZ6,EZ7	EA	
39	54	PADZZ	2915-01-018-2450	11599	51948	.COUPLING,GOVERNOR C ... EZL	EA	
39	55	PCDZZ	5330-00-265-1099	96906	MS29513-128	.PACKING,PREFORMED	EA	
39	56	PADZZ	5365-00-647-2376	11599	41823	.SHIM	EA	
39	57	PADZZ	5365-00-091-9777	79136	5107-46H	.RING,RETAINING	EA	
39	58	PADZZ	5310-00-807-9009	11599	41232-22	.WASHER,FLAT	EA	
39	58	PADZZ	5310-00-618-2119	11599	41232-25	.WASHER,FLAT	EA	
39	58	PADZZ	5310-00-618-2004	11599	41232-28	.WASHER,FLYWEIGHT CO	EA	
39	58	PADZZ	5310-00-618-2003	11599	41232-31	.WASHER,THRUST	EA	
39	58	PADZZ	5310-00-618-1999	11599	41232-34	.WASHER,FLAT	EA	
39	59	PCDZZ	5330-00-291-7284	96906	MS29513-133	.PACKING,PREFORMED	EA	
39	60	PADZZ	5365-00-900-6351	11599	41129	.SHIM	EA	
39	61	PADZZ	2915-00-991-0969	11599	74911	.PLATE AND BEARING A	EA	
39	62	PADDD	2915-00-963-1107	11599	78945	.FLYWEIGHT AND BASE	EA	
39	63	PADZZ	5315-00-966-7601	11599	78943	..PIN,STRAIGHT,HEA	EA	
39	63	PADZZ	5315-00-964-3879	11599	78946	..PIN,STRAIGHT,HEA	EA	
39	64	PADZZ	2915-00-991-0973	11599	75993	..FLYWEIGHT AND SAPPH	EA	
39	65	PADZZ	2915-00-096-0928	11599	77091	..BASE ASSEMBLY,FLYWE ... EZ6,EZ7	EA	
39	65	PADZZ	2915-01-018-2489	11599	51952	..BASE ASSEMBLY,FLYWE ... EZL	EA	
39	66	PADZZ	2915-00-977-1046	11599	75102	.FLANGE,SLEEVE,GOVER	EA	
39	67	PADZZ	5305-00-701-5071	96906	MS51959-61	.SCREW,MACHINE	EA	
39	68	ADDCO		11599	77285	.VALVE AND YOKE ASSE	EA	
39	69	PADZZ	5310-00-701-7322	11599	76035	..WASHER,FLAT	EA	
39	70	PADZZ	2915-00-990-6456	11599	76001	..SHAFT,STRAIGHT	EA	
39	71	PADZZ	5310-00-702-0960	11599	76034	..WASHER,FLAT	EA	

(1) ILLUSTRATION (a) FIG NO	(b) ITEM NO	(2) SMR CODE	(3) NATIONAL STOCK NUMBER	(4) FSCM	(5) PART NUMBER	(6) DESCRIPTION USABLE ON CODE	(7) U/M	(8) QTY INC IN UNIT
35	72	PAOZZ	2915-00-987-0431	11599	76683	..YOKE ASSEMBLY	EA	1
35	73	PAOZZ	2915-00-996-7429	11599	76237	..VALVE AND SLEEVE AS	EA	1
35	74	PAOZZ	5330-00-460-5755	96906	MS29513-015	.PACKING,PREFORME	EA	1
35	75	PCOZZ	5330-00-248-3821	96906	MS29513-011	.PACKING,PREFORMED	EA	1
35	76	PCOZZ	5330-00-248-3836	96906	MS29513-012	.PACKING,PREFORMED	EA	1
35	77	PCOZZ	5330-00-248-3840	96906	MS29513-014	.PACKING,PREFORMED	EA	1
35	78	PAOZZ	5315-00-875-7649	11599	71841	.PIN,STRAIGHT,HEADLE	EA	1
35	79	PAOZZ	3120-00-856-3210	11599	75630	.ROLLER,LINEAR-ROTAR	EA	1
35	80	PAOZZ	5365-00-701-7317	11599	75035	.SHIM	EA	1
35	81	PAOZZ	2915-00-966-9334	11599	77664	.LEVER,PISTON FOLLOW	EA	1
35	82	PAOZZ	5315-00-879-0920	11599	71831	.PIN,STRAIGHT,HEADLE	EA	1
35	83	PAOZZ	5365-00-701-7317	11599	75035	.SHIM	EA	2
35	84	PAOZZ	5315-00-840-9236	96906	MS51923-168	.PIN,SPRING	EA	1
35	85	PAOZZ	5315-00-879-2917	11599	71830	.PIN,STRAIGHT,HEADLE	EA	1
35	86	PAOZZ	3120-00-964-6475	11599	75628	.ROLLER,LINEAR-ROTAR	EA	1
35	87	PAOZZ	2915-00-966-9353	11599	75887	.CAP,CONTROL	EA	1
35	88	PAOZZ	5305-00-942-8421	96906	MS35275-245	.SCREW,MACHINE	EA	2
35	89	PAOOO	2915-00-987-1748	11599	77434	.COVER ASSEMBLY,PIST	EA	1
35	90	PAOZZ	5315-00-702-9890	96906	MS16555-602	..PIN,STRAIGHT,HEA	EA	1
35	91	PCOZZ	5330-00-248-3835	96906	MS29513-010	.PACKING,PREFORMED	EA	1
35	92	PCOZZ	5330-00-248-3848	96906	MS29513-018	.PACKING,PREFORMED	EA	1
35	93	PAOZZ	5315-00-079-2484	96906	MS9245-03	.PIN,COTTER	EA	1
35	94	PAOZZ	5310-00-880-6247	11599	26024	.NUT,PLAIN,CASTELLAT	EA	1
35	95	PAOZZ	2915-00-888-3353	11599	71824	.BODY,PISTON	EA	2
35	96	PAOZZ	5360-00-804-1099	11599	75050	.SPRING,GARTER,EXTEN	EA	2
35	97	PAOZZ	2915-00-038-4308	11599	24668	.CUP,COMPRESSION	EA	2
35	98	PAOZZ	5310-00-879-9542	11599	72385	.WASHER,FLAT	EA	1
35	99	PAOZZ	5315-00-965-6506	11599	75645	.PIN,SHOULDER,HEADLE	EA	1
35	100	PAOZZ	5360-00-858-4023	11599	71870	.SPRING,HELICAL,EXTE	EA	1
35	101	PAOZZ	5315-00-965-5174	11599	77663	.PIN,STRAIGHT,HEADED	EA	1
35	102	PAOZZ	5365-00-879-8007	11599	71865	.SPACER,SLEEVE	EA	1
35	103	PCOZZ	5330-00-248-3835	96906	MS29513-010	.PACKING,PREFORMED	EA	1
35	104	PAOOO	2915-00-996-7427	11599	75503	.HOUSING ASSEMBLY	EA	1
35	105	PAOZZ	5315-00-847-5751	96906	MS16555-629	..PIN,STRAIGHT,HEA	EA	2
35	106	XAOZZ		11599	28516-28	..PLUG,DRIVE,TAPERED F76,F77	EA	1
35	107	PAOZZ	5365-00-818-2103	11599	41813	..SPACER,SLEEVE	EA	1
35	108	XAOZZ		11599	28516-1	..PLUG,PROTECTIVE,DUS F77,F78	EA	1
35	109	XBOZZ	5315-00-880-8857	11599	138OFF002	..PIN,SHOULDER,HEA	EA	1
35	110	PAOZZ	2915-00-842-0192	11599	77382	.COVER,SHIPPING,MAIN	EA	1
35	111	PAOZZ	5305-00-939-9190	96906	MS35275-284	.SCREW,MACHINE	EA	2

(1) ILLUSTRATION (a) FIG NO	(1) ILLUSTRATION (b) ITEM NO	(2) SMR CODE	(3) NATIONAL STOCK NUMBER	(4) FSCM	(5) PART NUMBER	(6) DESCRIPTION USABLE ON CODE	(7) U/M	(8) QTY INC IN UNIT
39	111	PAOZZ	5305-00-844-5825	96906	MS35265-84	.SCREW,MACHINE..	EA	
39	112	XDOZZ	5310-00-761-6882	96906	MS51967-2	.NUT,PLAIN,HEXAGON..	EA	
39	113	PAOZZ	5310-00-515-7449	88044	AN960C416L	.WASHER,FLAT..	EA	
39	114	PAOZZ	5340-00-726-2214	11599	28501-14	.CAP-PLUG,PROTECT...	EA	

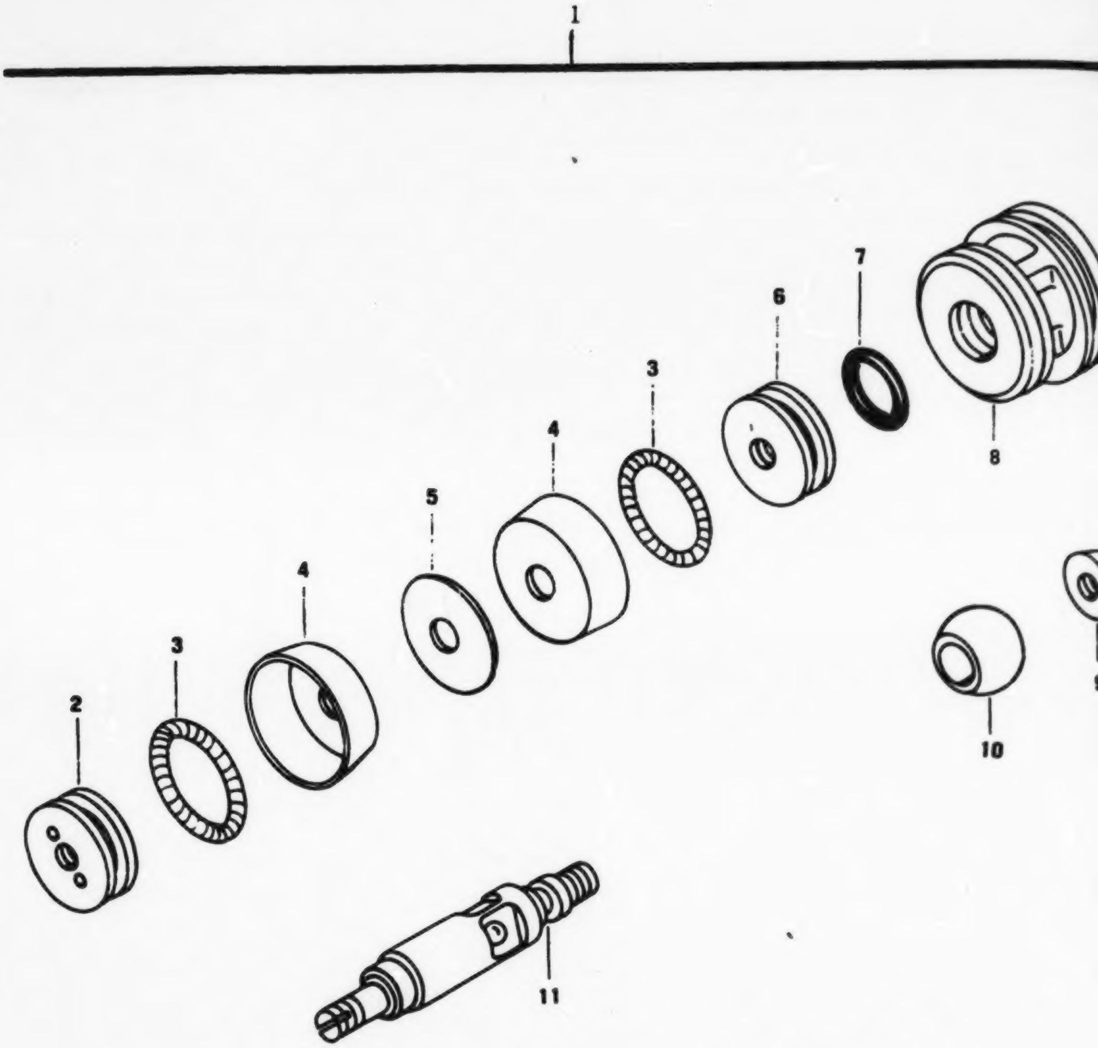

Figure 40. Changeover Valve Assembly

(1) ILLUSTRATION (a) FIG NO	(b) ITEM NO	(2) SMR CODE	(3) NATIONAL STOCK NUMBER	(4) FSCM	(5) PART NUMBER	(6) DESCRIPTION USABLE ON CODE	(7) U/M	(8) QTY INC IN UNIT
						GROUP 0404 CHANGEOVER VALVE ASSEMBLY		
						(T53-L-13B)		
40	1	AOOOO		11599	75176	VALVE AND SLEEVE AS SEE FIG.39 FOR BKD..........EFH	EA	1
40	2	PAOZZ	2915-00-552-1161	11599	75047	.BODY,PISTON,LOCKING..........EFH	EA	1
40	3	PAOZZ	5360-00-678-8584	11599	75049	.SPRING,CAPTIVE,EXTEN..........EFH	EA	1
40	4	PAOZZ	5340-00-847-2825	11599	46383	.CUP,COMPRESSION..........EFH	EA	1
40	5	PAOZZ	5310-00-551-5672	11599	46469	.WASHER,FLAT..........EFH	EA	1
40	6	PAOZZ	2915-00-719-2240	11599	75048	.BODY,PISTON,CHANGEO..........EFH	EA	1
40	7	PCOZZ	5330-00-248-3836	96906	MS29513-012	.PACKING,PREFORMED..........EFH	EA	1
40	8	PAOZZ	2915-00-764-5434	11599	72649	.SLEEVE,CHANGEOVER V..........EFH	EA	1
40	9	PAOZZ	5310-00-537-9321	11599	74505	.NUT,PLAIN,ROUND..........EFH	EA	1
40	10	PAOZZ	2915-00-675-4255	11599	74825	.VALVE,SPHERICAL..........EFH	EA	1
40	11	PAOZZ	2915-00-551-0570	11599	74830	.BODY,CHANGEOVER VALV..........EFH	EA	1

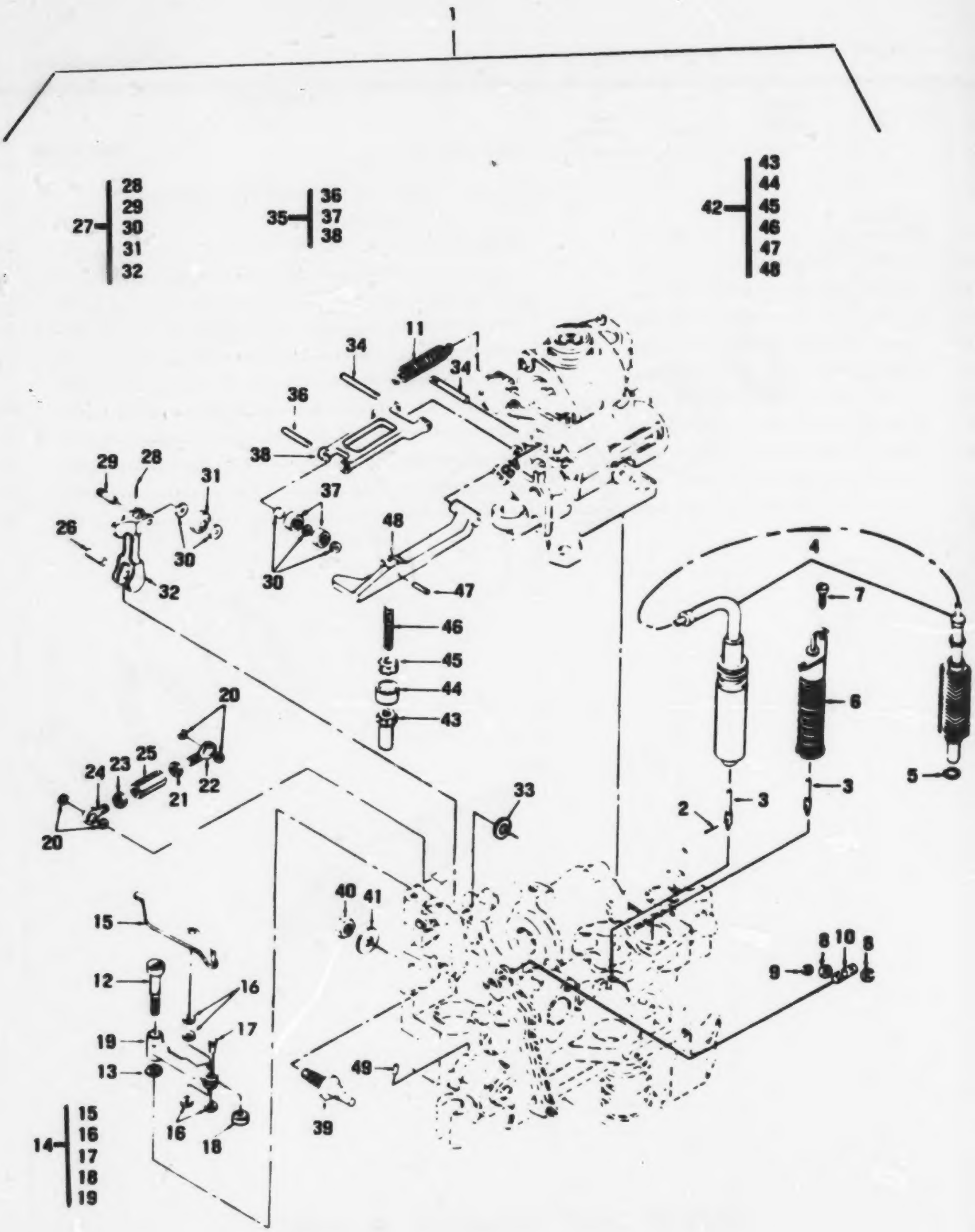

Figure 41. Computer Assembly (Sheet 1 of 4)

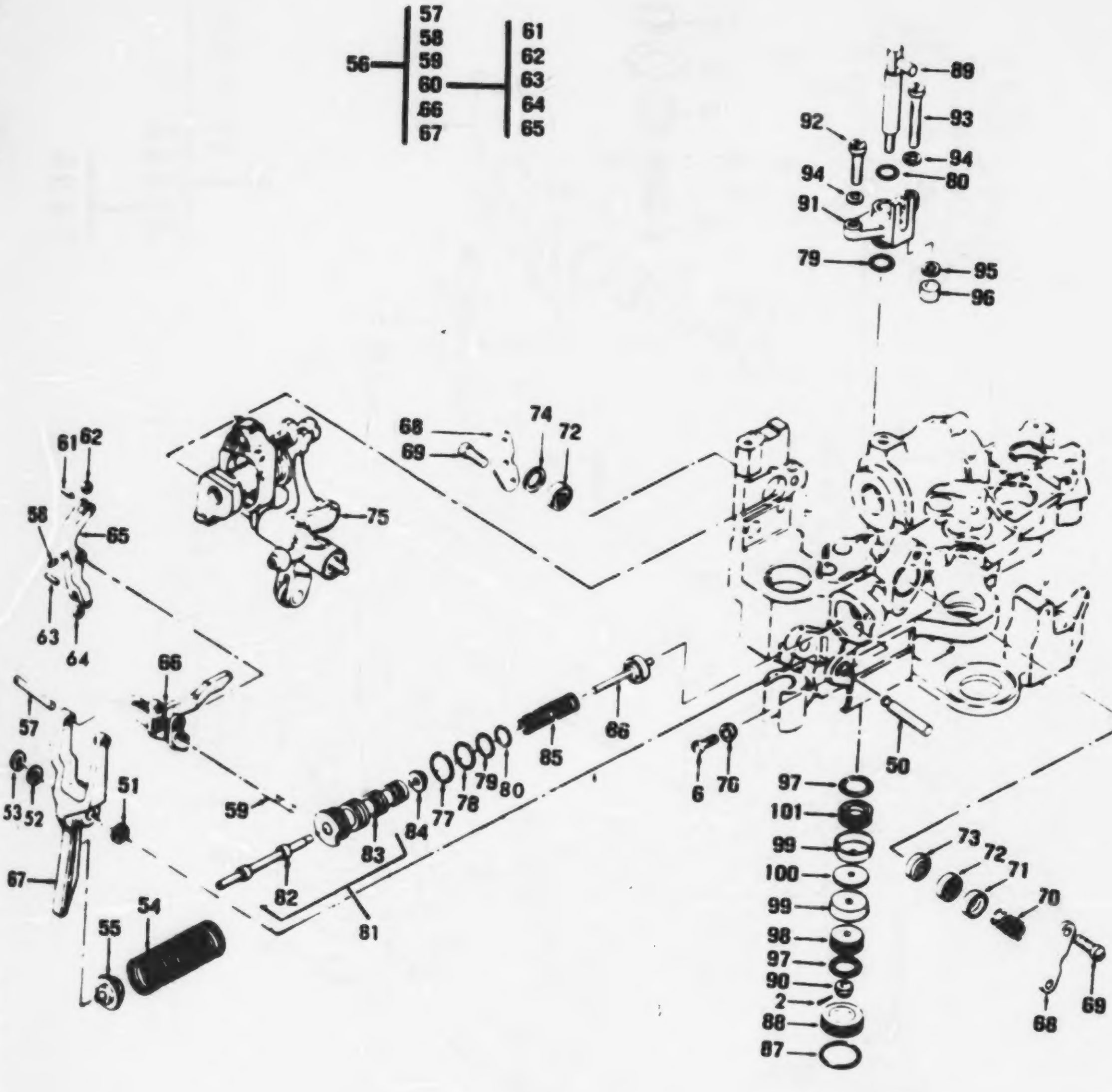

Figure 41. Computer Assembly (Sheet 2 of 4)

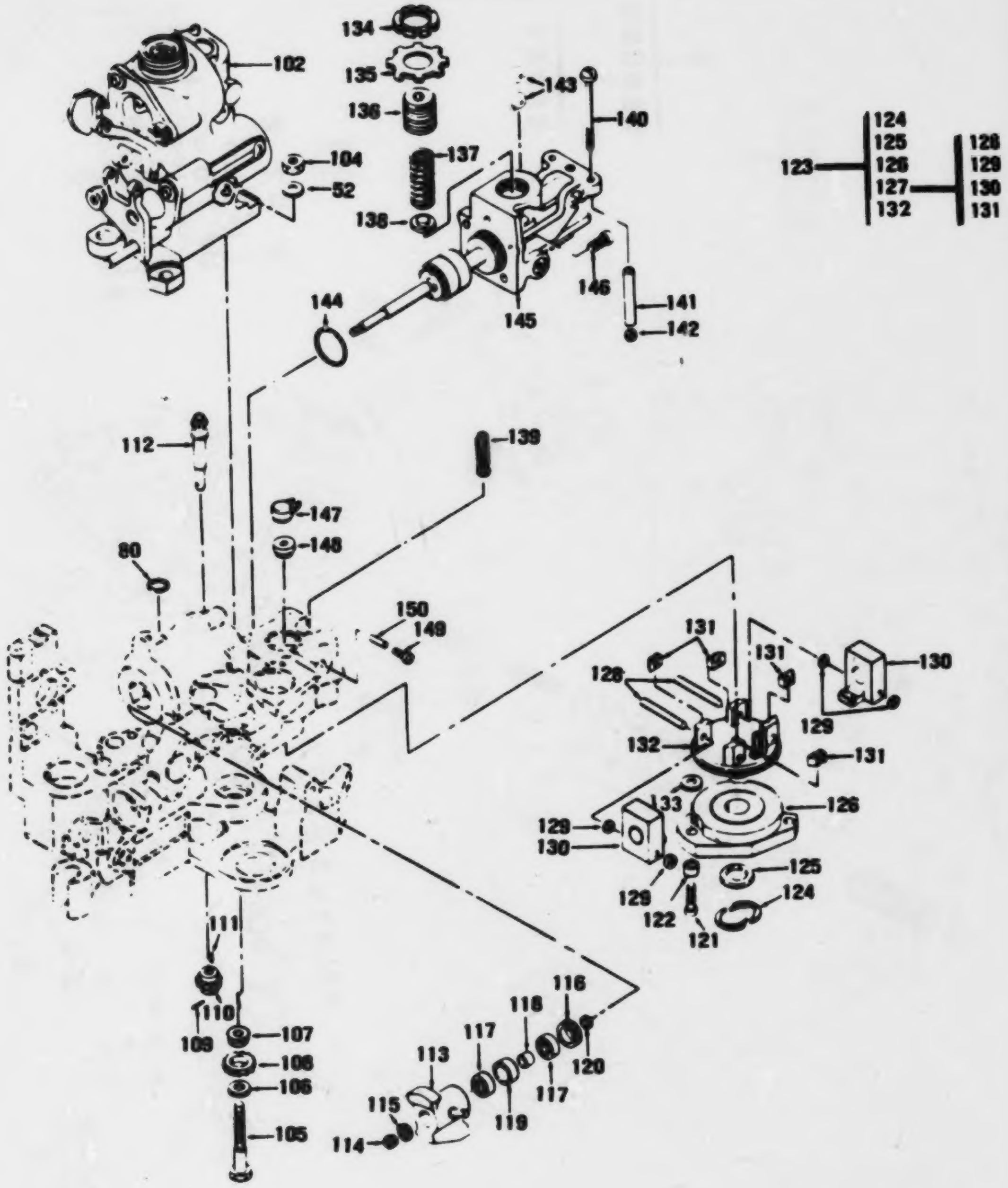

Figure 41. Computer Assembly (Sheet 3 of 4)

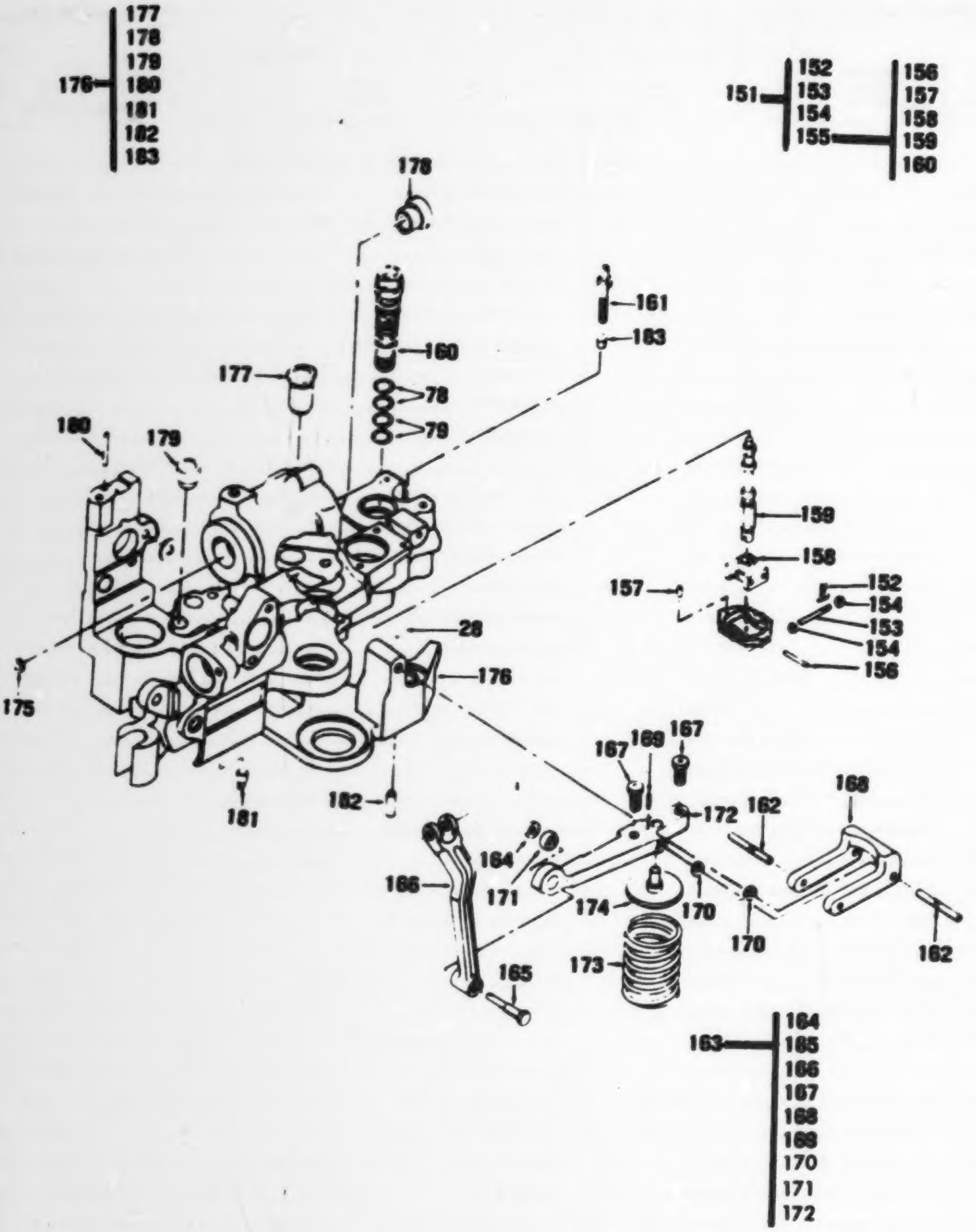

Figure 41. Computer Assembly (Sheet 4 of 4)

(1) ILLUSTRATION (a) FIG NO	(b) ITEM NO.	(2) SMR CODE	(3) NATIONAL STOCK NUMBER	(4) FSCM	(5) PART NUMBER	(6) DESCRIPTION USABLE ON CODE	(7) U/M	(8) QTY INC IN UNIT
						GROUP 0406 COMPUTER ASSEMBLY		
41	1	ADDDD		11599	54587	COMPUTER ASSEMBLY,C SEE FIG.35 FOR NHA..............F26,F27	EA	
41	1	ADDDD		11599	54588	COMPUTER ASSEMBLY,C SEE FIG.36 FOR NHA..............F71	EA	
41	2	PADZZ	5315-00-855-6615	96906	MS24665-22	.PIN,COTTER....................................	EA	
41	3	PADZZ	2915-00-952-1164	11599	75091	.PLUNGER,DETENT....................................	EA	
41	4	PADZZ	2915-00-952-1138	11599	74865	.MAIN BELLOWS ASSEMB....................................	EA	
41	5	PADZZ	5330-00-819-0017	11599	45471	..PACKING,PREFORMED....................................	EA	
41	6	PADZZ	2915-00-952-1156	11599	75866	.COMPENSATING BELLOW....................................	EA	
41	7	PADZZ	5305-00-939-5230	96906	MS35275-243	.SCREW,MACHINE....................................	EA	
41	8	PADZZ	5310-00-838-4458	11599	75090	.WASHER,FLAT....................................	EA	
41	9	PADZZ	5365-00-701-7309	11599	74991	.SHIM....................................	EA	
41	10	PADZZ	2915-00-951-9883	11599	75073	.CROSS PIN,TEMPERATU....................................	EA	
41	11	PADZZ	5360-00-089-3015	11599	71585	.SPRING,HELICAL,EXTE....................................	EA	
41	12	PADZZ	5305-00-954-4247	11599	74952	.SCREW,SHOULDER....................................	EA	
41	13	PADZZ	5310-00-954-2746	11599	74951	.WASHER,FLAT....................................	EA	
41	14	ADDDD		11599	77633	.LEVER ASSEMBLY,DECF..............................F26,F27	EA	
41	14	ADDDD		11599	83759	.LEVER ASSEMBLY..............................F71	EA	
41	15	ADDDD		11599	77632	..LEVER AND PIN ASSEM..............................F26,E27	EA	
41	15	PADZZ	2915-00-949-5880	11599	81866	..LEVER AND PIN ASSEM..............................F71	EA	
41	16	XBDZZ	5310-00-089-0183	11599	45040	..WASHER,FLAT....................................	EA	
41	17	PADZZ	5315-00-052-8034	11599	77631	..PIN,STRAIGHT,HEA....................................	EA	
41	18	PADZZ	3120-00-954-4238	11599	76333	..BEARING,PLAIN,SPHER....................................	EA	
41	19	PADZZ	2915-00-953-4552	11599	77629	..LEVER,DECELERATION....................................	EA	
41	20	PADZZ	5310-00-964-1092	11599	83564	.WASHER,FLAT..............................F71	EA	
41	21	PADZZ	5310-00-947-9859	11599	82152	.NUT,PLAIN,HEXAGON..............................F71	EA	
41	22	PADZZ	3120-00-948-5269	11599	82150	.BEARING,PLAIN,ROD E..............................F71	EA	
41	23	PADZZ	5310-00-949-8014	11599	28514-2	.NUT,PLAIN,HEXAGON..............................F71	EA	
41	24	PADZZ	3120-00-948-5257	11599	82149	.BEARING,PLAIN,ROD E..............................F71	EA	
41	25	PADZZ	5340-00-949-5503	11599	82151	.TURNBUCKLE BODY..............................F71	EA	
41	26	PADZZ	5315-00-949-5769	11599	81853	.PIN,STRAIGHT,HEADLE..............................F71	EA	
41	27	ADDDD		11599	83772	.LEVER ASSEMBLY,CAM..............................F71	EA	
41	28	PADZZ	5315-00-840-5236	96906	MS51923-168	..PIN,SPRING....................................	EA	
41	29	PADZZ	5315-00-944-1099	11599	78112-6	..PIN,GROOVED,HEADLES..............................F71	EA	
41	30	PADZZ	5365-00-960-3969	11599	75076	..SPACER,SLEEVE..............................F26,F27	EA	
41	30	PADZZ	5310-00-618-2108	11599	45554	..WASHER,FLAT..............................F71	EA	
41	31	PADZZ	3110-00-141-3751	11599	28565-8-75	..BEARING,BALL,ANNULA..............................F71	EA	
41	32	PADZZ	2915-00-949-5874	11599	83546	..LEVER,CAM FOLLOWER..............................F71	EA	
41	33	PADZZ	5365-00-948-9939	11599	78106-16	.SHIM..............................F71	EA	
41	34	PADZZ	5315-00-772-3524	11599	74838	.PIN,STRAIGHT,HEADLE....................................	EA	
41	35	PADDD	2915-00-285-8846	11599	75223	.FOLLOWER ASSEMBLY,P..............................F76,F77	EA	

(1) ILLUSTRATION (a) FIG NO	(b) ITEM NO	(2) SMR CODE	(3) NATIONAL STOCK NUMBER	(4) FSCM	(5) PART NUMBER	(6) DESCRIPTION USABLE ON CODE	(7) U/M	(8) QTY INC IN UNIT
41	35	PADDD	2915-00-834-1547	11599	67373	.FOLLOWER,PI PISTON..................................F7L	EA	1
41	36	PADZZ	5315-00-554-6829	11599	74835	..PIN,STRAIGHT,HEA....................................	EA	1
41	37	PADZZ	3120-00-706-5213	11599	74837	..ROLLER,LINEAR-ROTAR...........................F76,F77	EA	2
41	37	PADZZ	3110-00-553-5407	83086	516	..BEARING,BALL,ANNULA...............................F7L	EA	2
41	38	XADZZ		11599	81856	..ARM,PI PISTON FOLLO..................................	EA	1
41	39	PADZZ	5315-00-713-1359	11599	48779	.PIN,STOP..	EA	1
41	40	PADZZ	5310-00-167-1344	88044	AN315-4R	.NUT,PLAIN,HEXAGON.....................................	EA	1
41	41	PADZZ	5310-00-515-7449	88044	AN960C416L	.WASHER,FLAT...	EA	1
41	42	AODDD		11599	75220	.LEVER ASSEMBLY,LOWE...................................	EA	1
41	43	PADZZ	5310-00-553-5015	11599	75056	..NUT..	EA	1
41	44	PADZZ	2915-00-355-8502	11599	70090	..CUP,LOCKING..	EA	1
41	45	XBDZZ	5310-00-554-2742	11599	75054	..NUT,PLAIN,ROUND......................................	EA	1
41	46	PADZZ	5315-00-554-6832	11599	75058	..PIN,STRAIGHT,THR.....................................	EA	1
41	47	PADZZ	5315-00-823-8740	96906	MS16562-192	..PIN,SPRING...	EA	1
41	48	PADZZ	2915-00-553-4548	11599	75078	..LEVER,LOWER,MULTIPL..................................	EA	1
41	49	PADZZ	5315-00-844-5644	96906	MS16562-194	.PIN,SPRING..	EA	1
41	50	XBDZZ	5315-00-052-8036	11599	74841	.PIN,GROOVED,HEAD......................................	EA	1
41	51	PADZZ	5310-00-205-1816	10001	684083	.WASHER,FLAT...	EA	1
41	52	PADZZ	5310-00-167-0812	88044	AN960C10L	.WASHER,FLAT...	EA	2
41	53	PADZZ	5365-00-647-2836	11599	46393	.SHIM..	EA	1
41	54	PADZZ	5340-00-853-1755	11599	46385	.SPRING,HELICAL..	EA	1
41	55	PADZZ	5340-00-715-2300	11599	46356	.SEAT,COMPRESSION SPRING...............................	EA	1
41	56	PADDD		11599	75221	.LEVER ASSEMBLY,SELE...................................	EA	1
41	57	PADZZ	5315-00-554-6831	11599	74506	..PIN,STRAIGHT,HEA.....................................	EA	1
41	58	PADZZ	5315-00-843-3735	96906	MS16562-190	..PIN,SPRING...	EA	1
41	59	PADZZ	5315-00-555-5566	11599	74505	..PIN,GROOVED,HEADLES..................................	EA	1
41	60	AODDD		11599	75222	..LEVER ASSEMBLY,GOVE...........................F76,F77	EA	1
41	60	AODDD		11599	96770	..LEVER ASSY,GOVERNOR...............................BZL	EA	1
41	61	PADZZ	5315-00-088-1537	11599	74507	...PIN,STRAIGHT,HEADLE.................................	EA	1
41	62	PADZZ	3120-00-704-5441	11599	75093	...BEARING,PLAIN,SPHER.................................	EA	1
41	63	PADZZ	5315-00-554-6830	11599	74504	...PIN,STRAIGHT,HEA....................................	EA	1
41	64	PADZZ	3120-00-565-5351	11599	75092	...BEARING,SLEEVE......................................	EA	1
41	65	XADZZ		11599	75075	...LEVER GOVERNOR SERV.................................	EA	1
41	66	PADZZ	2915-00-553-4582	11599	74549	..CAP,CONTROL-DROOP.............................F76,F77	EA	1
41	66	PADZZ	2915-01-018-3819	11599	94565	..CAP,DROOP...BZL	EA	1
41	67	PADZZ	2915-00-553-5002	11599	74840	..LEVER,SELECTOR.......................................	EA	1
41	68	PADZZ	3110-00-544-8533	11599	81857	.PLATE,RETAINING,BEA...................................	EA	2
41	69	PADZZ	5305-00-535-5221	96906	MS35275-241	.SCREW,MACHINE...	EA	4
41	70	PADZZ	5360-00-647-2340	11599	26016	.SPRING,HELICAL,COMP...................................	EA	1
41	71	PADZZ	2915-00-553-4555	11599	74524	.SEAT,SPRING,ROCKSHA...................................	EA	1

(1) ILLUSTRATION (a) FIG NO.	(b) ITEM NO.	(2) SMR CODE	(3) NATIONAL STOCK NUMBER	(4) FSCM	(5) PART NUMBER	(6) DESCRIPTION USABLE ON CODE	(7) U/M	(8) QTY INC IN UNIT
41	72	PADZZ	3110-00-227-4761	11599	28565-10-75	.BEARING,BALL,ANNULA..	EA	2
41	73	PADZZ	2915-00-552-5000	11599	74522	.SPACER,BEARING,ROCK..	EA	1
41	74	PADZZ	5310-00-588-4442	18876	851377C	.WASHER,FLAT..	EA	1
41	75	ADDDD		11599	77153	.ROCKSHAFT ASSEMBLY, SEE FIG.45 FOR BREAKDOWN........EZA,EZ7	EA	1
41	75	ADDDD		11599	53131	.ROCKSHAFT ASSY,PUMP SEE FIG.46 FOR BREAKDOWN............EZL	EA	1
41	76	PADZZ	5310-00-831-2334	11599	41202	.WASHER,SHOULDERED..	EA	1
41	77	PCDZZ	5330-00-248-3840	96906	MS29513-014	.PACKING,PREFORMED..	EA	1
41	78	PAFZZ	5330-00-248-3838	96906	MS29513-013	.PACKING,PREFORMED..	EA	2
41	79	PCDZZ	5330-00-248-3836	96906	MS29513-012	.PACKING,PREFORMED..	EA	4
41	80	PCDZZ	5330-00-248-3831	96906	MS29513-011	.PACKING,PREFORMED..	EA	1
41	81	PADZZ	2915-00-553-4584	11599	76132	.VALVE ASSEMBLY,GOVE..................................EZA,EZ7	EA	1
41	81	PADZZ	2915-01-019-8148	11599	55105	.VALVE ASSEMBLY,GOVE......................................EZL	EA	1
41	82	XADZZ		11599	76131	..VALVE,GOVERNOR SERV...	EA	1
41	83	XADZZ		11599	76133	..SLEEVE,GOVERNOR SER...	EA	1
41	84	PADZZ	2915-00-570-0312	11599	46221	.SEAT,HELICAL COMPRE..	EA	1
41	85	PADZZ	5360-00-838-2527	11599	46416	.SPRING,HELICAL,COMP..	EA	1
41	86	PADZZ	2915-00-553-4551	11599	75063	.GUIDE,SPRING,GOVERN..	EA	1
41	87	PCDZZ	5330-00-248-3842	96906	MS29513-017	.PACKING,PREFORMED..	EA	1
41	88	PADZZ	5330-00-553-4585	11599	75053	.RETAINER,PACKING...	EA	1
41	89	PADZZ	2915-00-587-0424	11599	74942	.SHAFT AND PIN ASSEM..	EA	1
41	90	PADZZ	5310-00-880-6247	11599	26024	.NUT,PLAIN,CASTELLAT..	EA	1
41	91	PADZZ	2915-00-551-0981	11599	74890	.LINK,GOVERNOR..	EA	1
41	92	PADZZ	5305-00-535-5189	96906	MS35275-264	.SCREW,MACHINE..	EA	[illegible]
41	93	PADZZ	5305-00-942-5121	96906	MS35275-267	.SCREW,MACHINE..	EA	[illegible]
41	94	PADZZ	5310-00-831-2336	11599	46302	.WASHER,FLAT..	EA	[illegible]
41	95	PADZZ	5365-00-702-4481	11599	75529	.SHIM...	EA	[illegible]
41	96	PADZZ	5365-00-600-0720	11599	46238	.SPACER,SLEEVE..	EA	[illegible]
41	97	PADZZ	5360-00-678-8584	11599	75049	.SPRING,GARTER,EXTEN..	EA	[illegible]
41	98	PADZZ	2915-00-551-0588	11599	75052	.BODY,PISTON..	EA	[illegible]
41	99	PADZZ	5340-00-647-2370	11599	26021	.CUP..	EA	[illegible]
41	100	PADZZ	5310-00-831-2327	11599	46385	.WASHER,FLAT..	EA	[illegible]
41	101	PADZZ	2915-00-552-5789	11599	75051	.BODY,PISTON..	EA	[illegible]
41	102	ADDDD		11599	54593	.MULTIPLIER ASSEMBLY SEE FIG.43 FOR BREAKDOWN........EZA,EZ7	EA	[illegible]
41	102	ADDDD		11599	54584	.HOUSING ASSEMBLY SEE FIG.44 FOR BREAKDOWN...........EZL	EA	[illegible]
41	104	PAFZZ	5310-00-146-2501	11599	28914-5	.NUT,PLAIN,HEXAGON..	EA	[illegible]
41	105	XBDZZ	5306-00-554-3485	11599	76479	.BOLT,SHOULDER..	EA	[illegible]
41	106	PADZZ	5310-00-553-5517	11599	75096	.WASHER,FLAT..	EA	[illegible]
41	107	PADZZ	3120-00-554-1254	11599	75095	.BEARING,SLEEVE...	EA	[illegible]
41	108	PADZZ	3020-00-671-5520	11599	41237	.GEAR,SPUR..	EA	[illegible]

(1) ILLUSTRATION (a) FIG NO.	(b) ITEM NO.	(2) SMR CODE	(3) NATIONAL STOCK NUMBER	(4) FSCM	(5) PART NUMBER	(6) DESCRIPTION USABLE ON CODE	(7) U/M	(8) QTY INC IN UNIT
41	109	PADZZ	5315-00-815-1405	96906	MS24665-151	.PIN,COTTER	EA	1
41	110	PADZZ	3020-00-871-5522	11599	41239	.GEAR,SPUR	EA	1
41	111	PADZZ	5315-00-815-5873	11599	75760	.KEY,WOODRUFF	EA	1
41	112	PADZZ	2915-00-871-9500	11599	45132	.GEARSHAFT,BEVEL PIN	EA	1
41	113	PADZZ	2915-00-553-4555	11599	76288	.CAM ASSEMBLY,CONTRO ... EZA,EZ7	EA	1
41	113	PADZZ	2915-01-018-3820	11599	55857	.CAM ASSY,CONTROL ... EZL	EA	1
41	114	PADZZ	5310-00-800-0751	11599	25851	.NUT,PLAIN,ROUND	EA	1
41	115	PADZZ	5310-00-873-8028	11599	43811	.WASHER,KEY	EA	1
41	116	PADZZ	5365-00-554-2474	11599	75065	.RING,EXTERNALLY THR	EA	1
41	117	PADZZ	3110-00-554-0815	11599	28565-15-75	.BEARING,BALL,ANNULA	EA	2
41	118	PADZZ	5365-00-554-1256	11599	75071	.SPACER,SLEEVE	EA	1
41	119	PADZZ	5365-00-554-1255	11599	75070	.SPACER,SLEEVE	EA	1
41	120	PADZZ	5365-00-701-7315	11599	75035	.SHIM	EA	1
41	121	PADZZ	5305-00-525-5187	96906	MS35275-262	.SCREW,MACHINE	EA	2
41	122	PADZZ	5310-00-647-2065	11599	46751	.WASHER,RECESSED	EA	3
41	123	ACDDD		11599	74881	.FLYWEIGHT ASSY,COMP ... EZA,EZ7	EA	1
41	123	ACDDD		11599	83868	.FLYWEIGHT ASSEMBLY ... EZL	EA	1
41	124	PADZZ	5365-00-051-5777	79136	5107-466	..RING,RETAINING	EA	1
41	125	PADZZ	5310-00-803-5005	11599	41232-22	..WASHER,FLAT	EA	1
41	125	PADZZ	5310-00-818-2119	11599	41232-25	..WASHER,FLAT	EA	1
41	125	PADZZ	5310-00-818-2004	11599	41232-28	..WASHER,FLYWEIGHT GO	EA	1
41	125	PADZZ	5310-00-818-2003	11599	41232-31	..WASHER,FLAT	EA	V
41	125	PADZZ	5310-00-818-1999	11599	41232-34	..WASHER,FLAT	EA	V
41	126	PADZZ	2915-00-551-0580	11599	74798	..PLATE AND BEARING A	EA	1
41	127	PADDD	2915-00-563-1108	11599	78544	..FLYWEIGHT ASSEMBLY ... EZA,EZ7	EA	1
41	127	PADDD	2915-01-018-3823	11599	102231	..FLYWEIGHT ASSY,COMP ... EZL	EA	1
41	128	PADZZ	5315-00-566-7601	11599	78543	...PIN,STRAIGHT,HEA ... EZA,EZ7	EA	2
41	128	PADZZ	5315-00-547-2553	11599	83867	...PIN,STRAIGHT,HEADLE ... EZL	EA	2
41	129	PADZZ	5310-00-555-6375	11599	12558	...WASHER,FLAT ... EZA,EZ7	EA	4
41	129	PADZZ	5310-00-544-8168	11599	83866	...WASHER,FLAT ... EZL	EA	4
41	130	PADZZ	2915-00-587-0423	11599	74862	...SAPPHIRE AND FLYWEI	EA	2
41	131	PADZZ	5340-00-555-5864	11599	83567	...STRAP,RETAINING ... EZL	EA	4
41	132	PADZZ	2915-00-552-1157	11599	75570	..BASE,FLYWEIGHT SUBA ... EZA,EZ7	EA	1
41	132	PADZZ	2915-01-018-3822	11599	102232	..BASE,FLYWEIGHT ... EZL	EA	1
41	133	PADZZ	5365-00-647-2836	11599	46393	.SHIM	EA	1
41	134	PADZZ	5310-00-880-6240	11599	25745	.NUT,PLAIN,ROUND	EA	1
41	135	PADZZ	5310-00-725-3376	11599	41915	.WASHER,KEY	EA	1
41	136	PADZZ	2915-00-563-1103	11599	77677	.CUP,SPRING ADJUSTIN	EA	1

(1) ILLUSTRATION (a) FIG NO	(b) ITEM NO	(2) SMR CODE	(3) NATIONAL STOCK NUMBER	(4) FSCM	(5) PART NUMBER	(6) DESCRIPTION USABLE ON CODE	(7) U/M	(8) QTY INC IN UNIT
41	137	PADZZ	5360-00-587-7107	11599	42675	.SPRING,HELICAL,COMP	EA	
41	138	PADZZ	2515-00-680-3126	11599	41174	.SEAT,HELICAL COMPRE	EA	
41	139	PADZZ	5360-00-838-2528	11599	48744	.SPRING,HELICAL,COMP	EA	
41	140	PADZZ	5305-00-775-6584	11599	80841	.SCREW,MACHINE	EA	
41	141	PADZZ	5365-00-618-2104	11599	75858	.SPACER,SLEEVE	EA	
41	142	PADZZ	5365-00-701-7318	11599	75038	.SHIM	EA	
41	143	PADZZ	3110-00-710-9532	11599	41234	.BALL,BEARING	EA	
41	144	PCDZZ	5330-00-248-3848	96906	MS29513-018	.PACKING,PREFORMED	EA	
41	145	AODDD		11599	84227	.ROD ASSEMBLY,RPM CO SEE FIG.42 FOR BREAKDOWN	EA	
41	146	PADZZ	5305-00-593-1412	96906	MS24674-8	.SCREW,CAP,SOCKET HE	EA	
41	147	PADZZ	2915-00-517-1058	11599	75371	.RETAINER AND WASHER ASSEMBLY	EA	
41	148	PADZZ	3120-00-587-5537	11599	76253	.BEARING,WASHER,THRU	EA	
41	149	PADZZ	5305-00-940-5485	96906	MS35275-227	.SCREW,MACHINE	EA	
41	150	PADZZ	5315-00-678-8588	11599	75123	.PIN,STRAIGHT,HEADLE	EA	
41	151	PADDD	2915-00-992-1147	11599	76885	.VALVE ASSEMBLY,SERV	EA	
41	152	PADZZ	5315-00-883-2771	96906	MS51923-167	..PIN,SPRING	EA	
41	153	XADZZ		11599	75387	..PIN,STRAIGHT,HEA	EA	
41	154	PADZZ	5310-00-702-0540	11599	76034	..WASHER,FLAT	EA	
41	155	XADDD		11599	76896	..YOKE ASSEMBLY,SERVO ... FZL	EA	
41	156	XADZZ		11599	75388	...PIN,GUIDE	EA	
41	157	PADZZ	5315-00-883-2773	96906	MS51923-425	...PIN,SPRING	EA	
41	158	XADZZ		11599	76127	...BUTTON ASSEMBLY	EA	
41	159	XADZZ		11599	76250	...VALVE	EA	
41	160	XADZZ		11599	76249	...SLEEVE	EA	
41	161	PADZZ	5305-00-731-8113	11599	48544	.SCREW,MACHINE	EA	
41	162	PADZZ	5315-00-990-1360	11599	75085	.PIN,GROOVED,HEADLES	EA	
41	163	AODDD		11599	77185	.LEVER AND FORK ASSE	EA	
41	164	PADZZ	5365-00-701-7320	11599	75074	..SHIM	EA	
41	165	PADZZ	5315-00-952-7162	11599	77195	..PIN,SHOULDER,HEADED	EA	
41	166	PADZZ	2915-00-551-9403	11599	46216	..LINK,CONNECTING,RIG	EA	
41	167	PADZZ	2915-00-551-5539	11599	43285	..SCREW,ADJUSTING BELLOWS	EA	
41	168	PADZZ	2915-00-952-1139	11599	74583	..FORK,LINKAGE	EA	
41	169	PADZZ	5315-00-840-5238	96906	MS51923-168	..PIN,SPRING	EA	
41	170	PADZZ	5365-00-701-7305	11599	74991	..SHIM	EA	
41	171	PADZZ	3120-00-965-7383	11599	77173	..BEARING,PLAIN,SPHER	EA	
41	172	PADZZ	2915-00-058-6529	11599	77079	..LEVER,FUEL CONTROL	EA	
41	173	PADZZ	5360-00-846-7328	11599	43639	.SPRING,HELICAL,COMP ... FZ6,FZ7	EA	
41	173	PADZZ	5360-00-850-5008	11599	80152	.SPRING,HELICAL,COMP ... FZ1	EA	
41	174	PADZZ	2915-00-992-1163	11599	75083	.SEAT,HELICAL COMPRE	EA	
41	175	PCDZZ	5330-00-248-3835	96906	MS29513-010	.PACKING,PREFORMED	EA	

(1) ILLUSTRATION (a) FIG NO.	(b) ITEM NO.	(2) SMR CODE	(3) NATIONAL STOCK NUMBER	(4) FSCM	(5) PART NUMBER	(6) DESCRIPTION USABLE ON CODE	(7) U/M	(8) QTY INC IN UNIT
41	176	PADDD	2915-00-551-0582	11599	74895	.HOUSING ASSEMBLY,CO..................................F76,F77	EA	1
41	176	PADDD	2915-00-944-8237	11599	84232	.HOUSING,MECHANICAL..................................F71	EA	1
41	177	PADZZ	3120-00-088-1790	11599	74871	..BEARING,SLEEVE..	EA	1
41	178	PADZZ	3120-00-977-1047	11599	74870	..BEARING,SLEEVE..	EA	1
41	179	PADZZ	2915-00-949-5846	11599	83456	..ADAPTER,TUBE TRANSF..................................FZL	EA	1
41	183	PADZZ	5315-00-949-9737	11599	81870	..PIN,STRAIGHT,HEADLE..................................FZL	EA	1
41	181	XBDZZ	5315-00-954-3480	11599	28558-10-1	..PIN,STRAIGHT,HEA..	EA	1
41	181	XBDZZ	5315-00-954-3481	11599	28558-10-2	..PIN,STRAIGHT,HEA..	EA	1
41	181	XBDZZ	5315-00-954-3482	11599	28558-10-3	..PIN,STRAIGHT,HEA..	EA	1
41	182	PADZZ	5315-00-713-1360	11599	47791	..PIN,RELIEVED,HEADLE..	EA	1
41	183	PADZZ	5340-00-815-4929	96906	MS21209C0815	..INSERT,SCREW THREAD..	EA	1

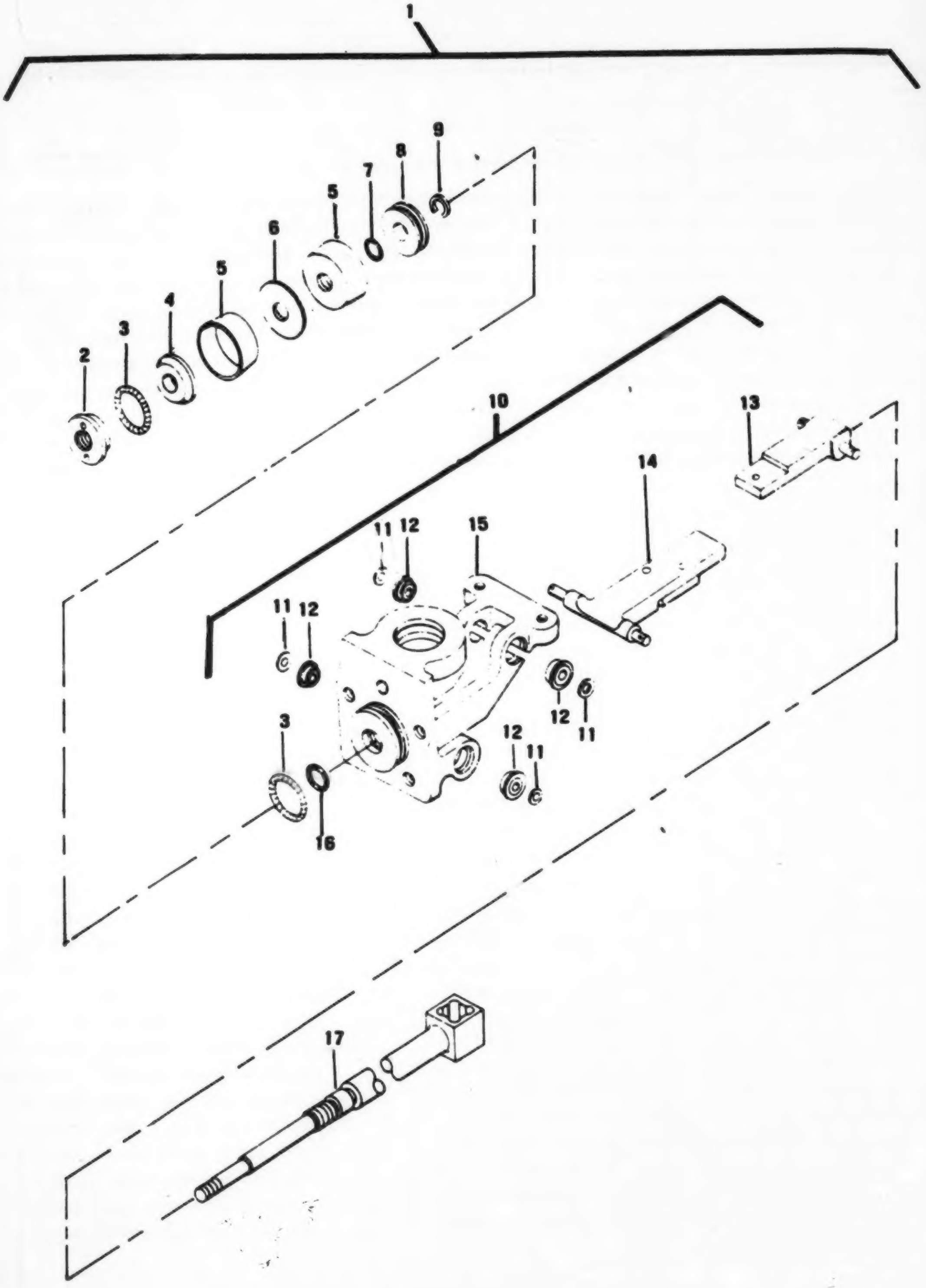

Figure 42. RPM Computer Shaft Assembly

(1) ILLUSTRATION (a) FIG NO.	(b) ITEM NO.	(2) SMR CODE	(3) NATIONAL STOCK NUMBER	(4) FSCM	(5) PART NUMBER	(6) DESCRIPTION USABLE ON CODE	(7) U/M	(8) QTY INC IN UNIT
						GROUP 0406 RPM COMPUTER SHAFT ASSEMBLY		
42	1	ADDDD		11599	84227	ROD ASSEMBLY,RPM CO SEE FIG.41 FOR NHA	EA	1
42	2	PADZZ	2915-00-671-5525	11599	43446	.NUT,FUEL CONTROL	EA	1
42	3	PADZZ	5360-00-604-1055	11599	75050	.SPRING,GARTER,EXTEN	EA	2
42	4	PADZZ	2915-00-671-7883	11599	43539	.SPACER,PISTON	EA	1
42	5	PADZZ	5340-00-647-2405	11599	43444	.CUP	EA	2
42	6	PADZZ	5310-00-831-2332	11599	43443	.WASHER,FLAT	EA	1
42	7	PCDZZ	5330-00-248-3835	96906	MS29513-010	.PACKING,PREFORMED	EA	1
42	8	PADZZ	2915-00-671-5493	11599	45482	.PISTON,COMPUTER SER	EA	1
42	9	PADZZ	5310-00-593-1001	11599	43445	.WASHER,SLOTTED	EA	1
42	10	ADDDD		11599	84226	.NUTCRACKER ASSEMBLY	EA	1
42	11	PADZZ	5365-00-537-8877	11599	84353-002	..SHIM	EA	1
42	11	PADZZ	5365-00-537-8878	11599	84353-005	..SHIM	EA	1
42	11	PADZZ	5310-00-537-8879	11599	84353-010	..WASHER,FLAT	EA	1
42	11	PADZZ	5310-00-537-8880	11599	84353-020	..WASHER,FLAT	EA	1
42	12	PADZZ	3110-00-801-3140	70854	SFR2-5M	..BEARING,BALL,ANNULAR	EA	4
42	13	PADZZ	2915-00-591-0987	11599	75064	..PLATE,NUTCRACKER	EA	1
42	14	PADZZ	2915-00-987-0428	11599	75385	..LEVER SUBASSEMBLY,L	EA	1
42	15	PADZZ	2915-00-944-8244	11599	83870	..BRACKET,NUTCRACKER	EA	1
42	16	PCDZZ	5330-00-248-3836	96906	MS29513-012	.PACKING,PREFORMED	EA	1
42	17	PADZZ	2915-00-591-0983	11599	74921	.ROD,RPM COMPUTER	EA	1

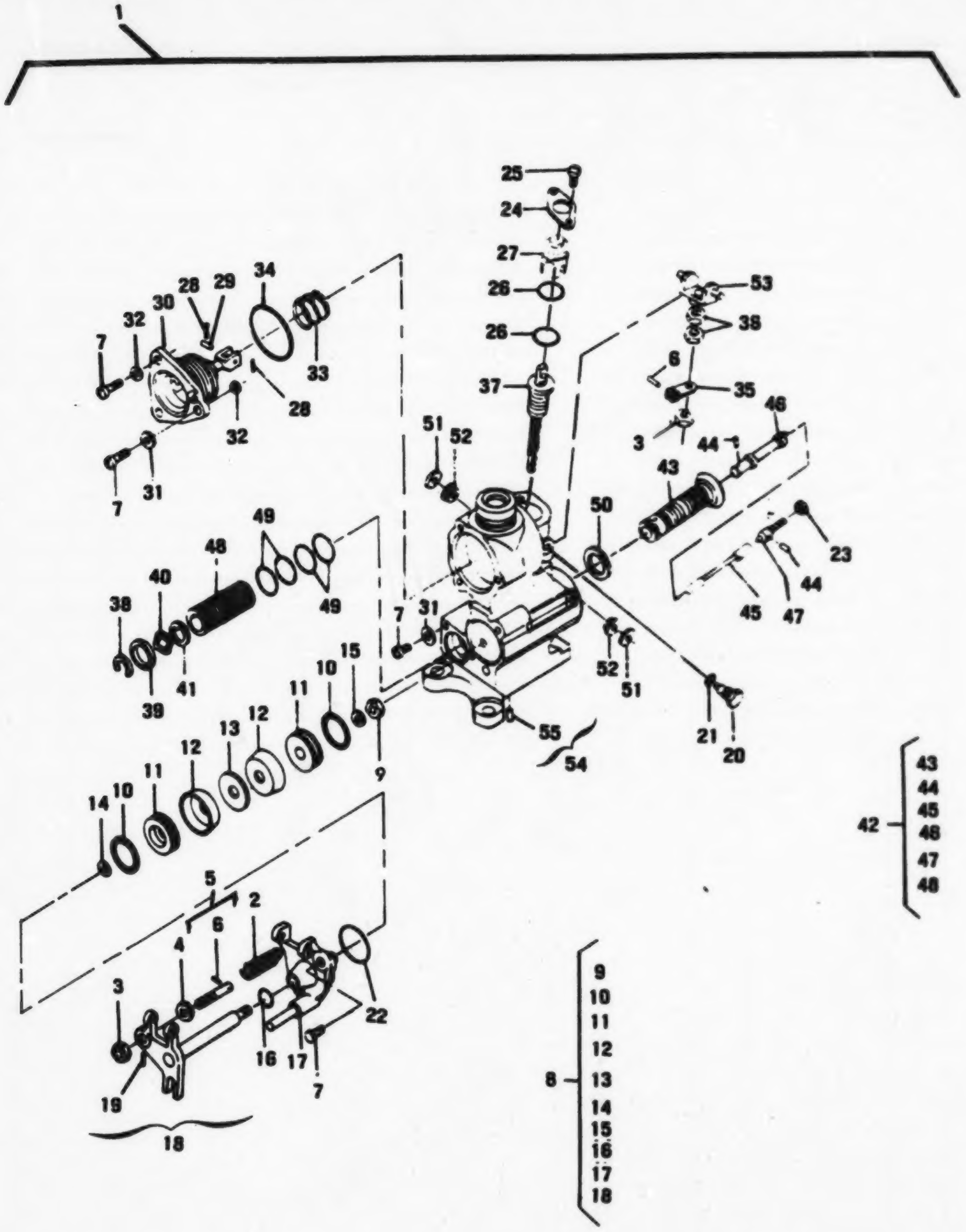

Figure 43. Multiplier Assembly, PI

(1) ILLUSTRATION (a) FIG NO.	(b) ITEM NO.	(2) SMR CODE	(3) NATIONAL STOCK NUMBER	(4) FSCM	(5) PART NUMBER	(6) DESCRIPTION USABLE ON CODE	(7) U/M	(8) QTY INC IN UNIT
						GROUP 0424 MULTIPLIER ASSEMBLY,PT		
						(T53-L-11C,T53-L-13B)		
43	1	AOOOO		11599	94583	MULTIPLIER ASSEMBLY SEE FIG.43 FOR NHA..........[illegible]	[illegible]	[illegible]
43	2	PAOZZ	5360-00-647-2428	11599	45549	.SPRING,HELICAL,EXTE..........[illegible]	[illegible]	[illegible]
43	3	PAOZZ	5310-00-880-7574	11599	45548	.NUT,SLEEVE..........[illegible]	[illegible]	[illegible]
43	4	PAFZZ	5310-00-144-3501	11599	28514-5	.NUT,PLAIN,HEXAGON..........[illegible]	[illegible]	[illegible]
43	5	PAOOO	2915-00-671-5483	11599	44750	.SCREW ASSEMBLY,ADJU..........[illegible]	[illegible]	[illegible]
43	6	PAOZZ	5315-00-821-2325	11599	44751	..PIN,STRAIGHT,HEA..........[illegible]	[illegible]	[illegible]
43	7	PAOZZ	5305-00-529-5230	96906	MS35275-263	.SCREW,MACHINE..........[illegible]	[illegible]	[illegible]
43	8	AOOOO		11599	75218	.COVER AND SHAFT..........[illegible]	[illegible]	[illegible]
43	9	PAOZZ	5310-00-880-7566	11599	67187	..NUT,PLAIN,HEXAGON..........[illegible]	[illegible]	[illegible]
43	10	PAOZZ	5360-00-804-1099	11599	75050	..SPRING,GARTER,INTER..........[illegible]	[illegible]	[illegible]
43	11	PAOZZ	2915-00-671-5469	11599	47776	..PISTON,FUEL CONTROL..........[illegible]	[illegible]	[illegible]
43	12	PAOZZ	2915-00-028-4268	11599	24666	..CUP,COMPRESSION..........[illegible]	[illegible]	[illegible]
43	13	PAOZZ	5310-00-821-2341	11599	25634	..WASHER,FLAT..........[illegible]	[illegible]	[illegible]
43	14	PAOZZ	5365-00-647-3021	11599	47830	..SHIM..........[illegible]	[illegible]	[illegible]
43	15	PAOZZ	5365-00-647-2826	11599	46392	..SHIM..........[illegible]	[illegible]	[illegible]
43	16	PCOZZ	5330-00-248-3825	96906	MS29513-010	..PACKING,PREFORMED..........[illegible]	[illegible]	[illegible]
43	17	PAOZZ	2915-00-552-4547	11599	75090	..COVER ASSEMBLY,PIST..........[illegible]	[illegible]	[illegible]
43	18	PAOOO	2915-00-552-4541	11599	75084	..ROD AND PLATE ASSEM..........[illegible]	[illegible]	[illegible]
43	19	PAOZZ	5315-00-883-2372	96906	MS51923-425	...PIN,SPRING..........[illegible]	[illegible]	[illegible]
43	20	PAOZZ	2915-00-671-5505	11599	45950	.SCREW,BELLOWS PLUG..........[illegible]	[illegible]	[illegible]
43	21	PCOZZ	5330-00-248-2832	96906	MS29513-337	.PACKING,PREFORMED..........[illegible]	[illegible]	[illegible]
43	22	PCOZZ	5330-00-248-3847	96906	MS29513-119	.PACKING,PREFORMED..........[illegible]	[illegible]	[illegible]
43	23	PAOZZ	5310-00-558-5116	11599	27947	.NUT,PLAIN,HEXAGON..........[illegible]	[illegible]	[illegible]
43	24	PAOZZ	2915-00-675-7328	11599	75054	.COVER PLATE,SEALING..........[illegible]	[illegible]	[illegible]
43	25	PAOZZ	5305-00-522-6286	96906	MS35275-228	.SCREW,MACHINE..........[illegible]	[illegible]	[illegible]
43	26	PCOZZ	5330-00-248-3838	96906	MS29513-013	.PACKING,PREFORMED..........[illegible]	[illegible]	[illegible]
43	27	PAOZZ	2915-00-671-5508	11599	45946	.PLUG,BELLOWS..........[illegible]	[illegible]	[illegible]
43	28	PAOZZ	5315-00-089-3428	81343	AS123781	.PIN,COTTER..........[illegible]	[illegible]	[illegible]
43	29	PAOZZ	5315-00-832-4117	11599	43672	.PIN,GROOVED HEADLESS..........[illegible]	[illegible]	[illegible]
43	30	PAOZZ	2915-01-018-2829	11599	89515	.BELLOWS ASSY,MULTIP..........[illegible]	[illegible]	[illegible]
43	30	PAOZZ	2915-00-552-4557	11599	74836	.BELLOWS ASSEMBLY,MU..........[illegible]	[illegible]	[illegible]
43	31	PAOZZ	5340-00-259-1084	11599	74503	.RETAINER,SPRING..........[illegible]	[illegible]	[illegible]
43	32	PAOZZ	5365-00-301-7220	11599	75074	.SHIM..........[illegible]	[illegible]	[illegible]
43	33	PAOZZ	5360-00-671-3839	11599	25357	.SPRING,HELICAL,COMP..........[illegible]	[illegible]	[illegible]
43	34	PCOZZ	5330-00-250-0228	96906	MS29513-119	.PACKING,PREFORMED..........[illegible]	[illegible]	[illegible]
43	35	PAOZZ	2915-00-552-4566	11599	75176	.LINK,Z SPRING..........[illegible]	[illegible]	[illegible]
43	36	XBOZZ	5310-00-880-6249	11599	45547	.NUT,PLAIN,HEXAGON..........[illegible]	[illegible]	[illegible]
43	37	PAOZZ	2915-00-555-0423	11599	74866	.BELLOWS ASSEMBLY,ST..........[illegible]	[illegible]	[illegible]

(1) ILLUSTRATION (a) FIG NO.	(1) ILLUSTRATION (b) ITEM NO	(2) SMR CODE	(3) NATIONAL STOCK NUMBER	(4) FSCM	(5) PART NUMBER	(6) DESCRIPTION USABLE ON CODE	(7) U/M
43	38	PADZZ	5365-00-604-1100	11599	75787	.RING,RETAINING....................F26,F27	EA
43	39	PADZZ	5365-00-954-3488	11599	75037	.SPACER,RING....................F26,F27	EA
43	40	PADZZ	5310-00-480-5801	11599	25925	.WASHER,SPRING TENSI....................F26,F27	EA
43	41	PADZZ	5310-00-818-2002	11599	25785	.WASHER,KEY....................F26,F27	EA
43	42	PADDD	2915-00-081-3502	11599	54565	.VALVE ASSEMBLY,MULT....................F26,F27	EA
43	43	XADZZ		11599	71512	..SLEEVE,ROTATING PI MULTIPLIER....................F26,F27	EA
43	44	PADZZ	5315-00-882-2771	96906	MS51923-167	..PIN,SPRING....................F26,F27	EA
43	45	XADZZ		11599	53194	..CONNECTOR ASSEMBLY....................F26,F27	EA
43	46	XADZZ		11599	74963	..VALVE....................F26,F27	EA
43	47	XADZZ		11599	53195	..SCREW ADJUSTING....................F26,F27	EA
43	48	XADZZ		11599	71393	..SLEEVE,OUTER....................F26,F27	EA
43	49	PCOZZ	5330-00-248-3840	96906	MS29513-014	.PACKING,PREFORMED....................F26,F27	EA
43	50	PADZZ	3120-00-953-5727	11599	75036	.BEARING,WASHER,THRU....................F26,F27	EA
43	51	PADZZ	5365-00-937-8877	11599	84353-002	.SHIM....................F26,F27	EA
43	51	PADZZ	5365-00-937-8878	11599	84353-005	.SHIM....................F26,F27	EA
43	51	PADZZ	5310-00-937-8879	11599	84353-010	.WASHER,FLAT....................F26,F27	EA
43	51	PADZZ	5310-00-937-8880	11599	84353-020	.WASHER,FLAT....................F26,F27	EA
43	52	PADZZ	3110-00-801-3140	70854	SFR2-5H	.BEARING,BALL,ANNULA....................F26,F27	EA
43	53	PADZZ	2915-00-953-4562	11599	75057	.TRUNNION,MULTIPLIER....................F26,F27	EA
43	54	PADDD	2915-00-775-7624	11599	71264	.HOUSING SUBASSEMBLY....................F26,F27	EA
43	55	PADZZ	5315-00-241-2923	88044	AN122691	..PIN,STRAIGHT HEA....................F26,F27	EA

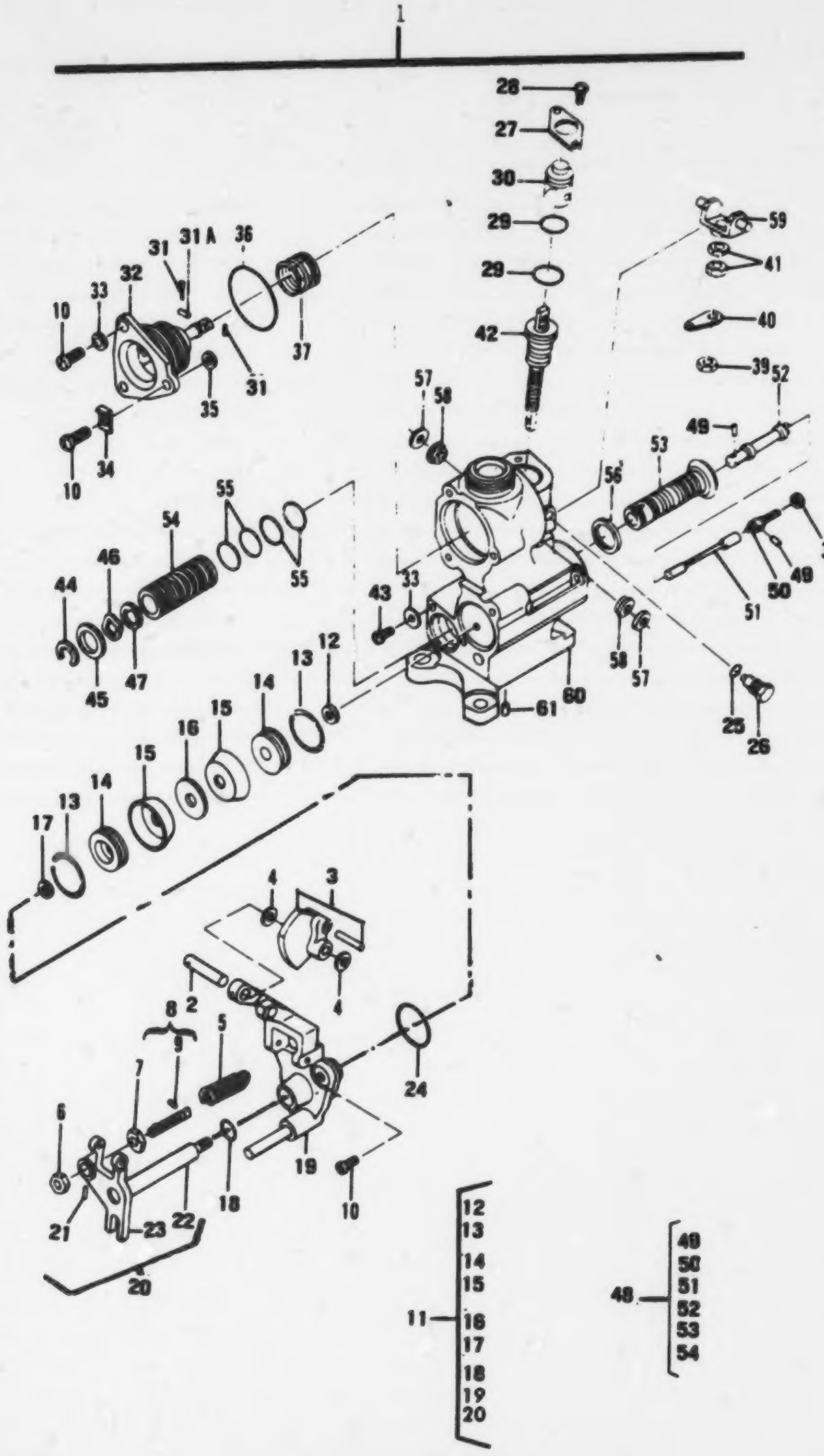

Figure 44. Multiplier Assembly, PI

(1) ILLUSTRATION (a) FIG NO.	(b) ITEM NO.	(2) SMR CODE	(3) NATIONAL STOCK NUMBER	(4) FSCM	(5) PART NUMBER	(6) DESCRIPTION USABLE ON CODE	(7) U/M	(8) QTY INC IN UNIT
						GROUP 0436 MULTIPLIER ASSEMBLY,PT		
						(T53-L-13B)		
44	1	AODOO		11599	54534	HOUSING ASSEMBLY SEE FIG.41 FOR NHA....................EZL	EA	1
44	2	PADZZ	5315-00-772-3524	11599	74838	.PIN,STRAIGHT,HEADLE....................EZL	EA	1
44	3	PADZZ	2915-01-018-2824	11599	56634	.CAM AND PIN,MULTIPL....................EZL	EA	1
44	4	PADZZ	5365-00-546-5565	11599	78136-2	.SHIM....................EZL	EA	2
44	5	PADZZ	5360-00-647-2420	11599	45545	.SPRING,HELICAL,EXTE....................EZL	EA	1
44	6	PAFZZ	5310-00-146-2501	11599	28514-5	.NUT,PLAIN,HEXAGON....................EZL	EA	1
44	7	PADZZ	5310-00-880-7574	11599	45548	.NUT,SLEEVE....................EZL	EA	1
44	8	PADOO	2915-00-871-5463	11599	44750	.SCREW ASSEMBLY,ADJU....................EZL	EA	1
44	9	PADZZ	5315-00-831-2325	11599	44751	..PIN,STRAIGHT,HEA....................EZL	EA	1
44	10	PADZZ	5305-00-539-5230	96906	MS35275-243	.SCREW,MACHINE....................EZL	EA	4
44	11	AODOO		11599	83758	.COVER AND SHAFT....................EZL	EA	1
44	12	PADZZ	5310-00-880-7566	11599	47182	..NUT,PLAIN,HEXAGON....................EZL	EA	1
44	13	PADZZ	5360-00-604-1055	11599	75050	..SPRING,GARTER,EXTEN....................EZL	EA	2
44	14	PADZZ	2915-00-871-5465	11599	47776	..PISTON,FUEL CONTROL....................EZL	EA	2
44	15	PADZZ	2915-00-028-4368	11599	24666	..CUP,COMPRESSION....................EZL	EA	2
44	16	PADZZ	5310-00-831-2341	11599	25634	..WASHER,FLAT....................EZL	EA	1
44	17	PADZZ	5365-00-847-3021	11599	47830	..SHIM....................EZL	EA	1
44	18	PCDZZ	5330-00-248-3835	96906	MS29513-310	..PACKING,PREFORMED....................EZL	EA	1
44	19	PADZZ	2915-00-944-8267	11599	83550	..COVER ASSEMBLY,PIST....................EZL	EA	1
44	20	PADOO	2915-00-553-4561	11599	75084	..ROD AND PLATE ASSEM....................EZL	EA	1
44	21	PADZZ	5315-00-883-2773	96906	MS51923-425	...PIN,SPRING....................EZL	EA	1
44	22	XADZZ		11599	75076	...ROD,PISTON....................EZL	EA	1
44	23	XADZZ		11599	75082	...PLATE,PIVOT,PI PIST....................EZL	EA	1
44	24	PCDZZ	5330-00-248-3847	96906	MS29513-115	.PACKING,PREFORMED....................EZL	EA	1
44	25	PCDZZ	5330-00-248-3832	96906	MS29513-307	.PACKING,PREFORMED....................EZL	EA	1
44	26	PADZZ	2915-00-871-5505	11599	45550	.SCREW,BELLOWS PLUG....................EZL	EA	1
44	27	PADZZ	2915-00-875-7328	11599	75054	.COVER PLATE,SEALING....................EZL	EA	1
44	28	PADZZ	5305-00-922-6288	96906	MS35275-228	.SCREW,MACHINE....................EZL	EA	2
44	29	PCDZZ	5330-00-248-3838	96906	MS29513-013	.PACKING,PREFORMED....................EZL	EA	2
44	30	PADZZ	2915-00-871-5508	11599	45546	.PLUG,BELLOWS....................EZL	EA	1
44	31	PADZZ	5315-00-855-6665	96906	MS24665-22	.PIN,COTTER....................EZL	EA	2
44	31A	PADZZ	5315-00-872-4117	11599	43672	.PIN,GROOVED HEADLES....................EZL	EA	1
44	32	PADZZ	2915-01-018-3825	11599	85515	.BELLOWS ASSY,MULTIP....................EZL	EA	1
44	33	PADZZ	5310-00-885-3744	88044	AN960C8	.WASHER,FLAT....................EZL	EA	4
44	34	PADZZ	5340-00-255-1064	11599	74532	.RETAINER,SPRING....................EZL	EA	1
44	35	PADZZ	5365-00-301-3320	11599	75074	.SHIM....................EZL	EA	1
44	36	PCDZZ	5330-00-250-0228	96906	MS29513-119	.PACKING,PREFORMED....................EZL	EA	1

(1) ILLUSTRATION (a) FIG NO.	(b) ITEM NO.	(2) SMR CODE	(3) NATIONAL STOCK NUMBER	(4) FSCM	(5) PART NUMBER	(6) DESCRIPTION USABLE ON CODE	(7) U/M
44	37	PADZZ	5360-00-671-7873	11599	25337	.SPRING,HELICAL,COMP....................EZL	EA
44	38	PADZZ	5310-00-596-5118	11599	27547	.NUT,PLAIN,HEXAGON....................EZL	EA
44	39	PADZZ	5310-00-880-7574	11599	45548	.NUT,SLEEVE....................EZL	EA
44	40	PADZZ	2915-00-553-4566	11599	75176	.LINK,Z SPRING....................EZL	EA
44	41	XBDZZ	5310-00-880-6245	11599	45547	.NUT,PLAIN,HEXAGON....................EZL	EA
44	42	PADZZ	2915-00-555-0823	11599	74866	.BELLOWS ASSEMBLY,SE....................EZL	EA
44	43	PADZZ	5305-00-535-5222	96906	MS35275-242	.SCREW,MACHINE....................EZL	EA
44	44	PADZZ	5365-00-804-1100	11599	75787	.RING,RETAINING....................EZL	EA
44	45	PADZZ	5365-00-954-2488	11599	75037	.SPACER,RING....................EZL	EA
44	46	PADZZ	5310-00-480-5801	11599	25525	.WASHER,SPRING TENSI....................EZL	EA
44	47	PADZZ	5310-00-618-2002	11599	25785	.WASHER,KEY....................EZL	EA
44	48	PADDD	2915-00-081-3502	11599	54565	.VALVE ASSEMBLY,MULT....................EZL	EA
44	49	PADZZ	5315-00-883-2771	96906	MS51923-167	..PIN,SPRING....................EZL	EA
44	50	XADZZ		11599	53195	..SCREW ADJUSTING....................EZL	EA
44	51	XADZZ		11599	53194	..CONNECTOR ASSEMBLY,....................EZL	EA
44	52	XADZZ		11599	74563	..VALVE....................EZL	EA
44	53	XADZZ		11599	71512	..SLEEVE,ROTATING-INN....................EZL	EA
44	54	XADZZ		11599	71393	..SLEEVE,OUTER....................EZL	EA
44	55	PCDZZ	5330-00-248-3840	96906	MS29513-014	.PACKING,PREFORMED....................EZL	EA
44	56	PADZZ	3120-00-553-9727	11599	75036	.BEARING,WASHER,THRU....................EZL	EA
44	57	PADZZ	5365-00-937-8877	11599	84353-002	.SHIM....................EZL	EA
44	57	PADZZ	5365-00-937-8878	11599	84353-005	.SHIM....................EZL	EA
44	57	PADZZ	5310-00-937-8879	11599	84353-010	.WASHER,FLAT....................EZL	EA
44	57	PADZZ	5310-00-937-8880	11599	84353-020	.WASHER,FLAT....................EZL	EA
44	58	PADZZ	3110-00-801-3140	70854	SFR2-5N	.BEARING,BALL,ANNULA....................EZL	EA
44	59	PADZZ	2915-00-553-4562	11599	75057	.TRUNNION,MULTIPLIER....................EZL	EA
44	60	PADDD	2915-00-544-8234	11599	84230	.HOUSING,MECHANICAL....................EZL	EA
44	61	PADZZ	5315-00-241-2523	88044	AN122691	..PIN,STRAIGHT HEA....................EZL	EA

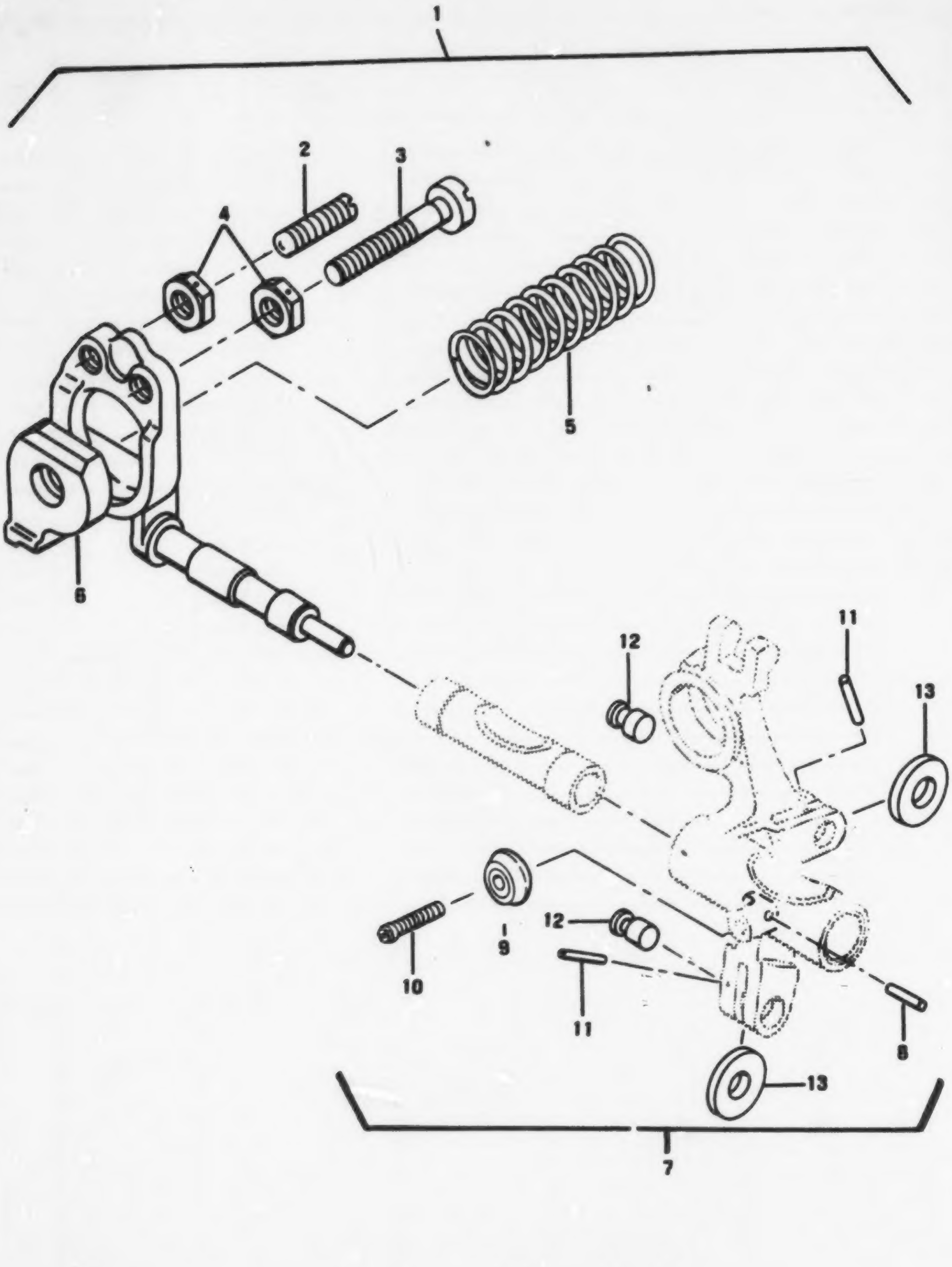

Figure 45. Rockshaft Assembly

(1) ILLUSTRATION (a) FIG NO.	(b) ITEM NO.	(2) SMR CODE	(3) NATIONAL STOCK NUMBER	(4) FSCM	(5) PART NUMBER	(6) DESCRIPTION USABLE ON CODE	(7) U/M	(8) QTY INC IN UNIT
						GROUP 0406 ROCKSHAFT ASSEMBLY		
						(T53-L-11C,T53-L-11D)		
45	1	ADDDD		11599	77153	ROCKSHAFT ASSEMBLY, SEE FIG.41 FOR NHA................E76,E77	EA	1
45	2	PADZZ	5305-00-716-8357	88044	AN565FC1032H10	.SETSCREW..E76,E77	EA	1
45	3	PADZZ	5305-00-544-4273	11599	63501	.SCREW,MACHINE BODY......................................E76,E77	EA	1
45	4	PAFZZ	5310-00-146-2501	11599	28514-5	.NUT,PLAIN,HEXAGON.......................................E76,E77	EA	2
45	5	PADZZ	5360-00-842-5047	11599	71262	.SPRING,HELICAL,COMP.....................................E76,E77	EA	1
45	6	PADZZ	2915-00-553-4550	11599	75072	.ROCKSHAFT ASSEMBLY......................................E76,E77	EA	1
45	7	PADDD	2915-00-551-0584	11599	74543	.BELLCRANK ASSEMBLY......................................E76,E77	EA	1
45	8	PADZZ	5315-00-557-3500	96906	MS51923-169	..PIN,SPRING...E76,E77	EA	1
45	9	PADZZ	3110-00-552-5408	11599	47013	..BEARING,BALL,ANNULAR...................................E76,E77	EA	1
45	10	PADZZ	5305-00-756-7054	11599	46414	..SCREW,MACHINE..E76,E77	EA	1
45	11	PADZZ	5315-00-823-8740	96906	MS16562-192	..PIN,SPRING...E76,E77	EA	2
45	12	PADZZ	2915-00-706-5214	11599	74538	..SHAFT,STRAIGHT...E76,E77	EA	2
45	13	PADZZ	3120-00-706-5217	11599	74537	..ROLLER,LINEAR-ROTAR....................................E76,E77	EA	2

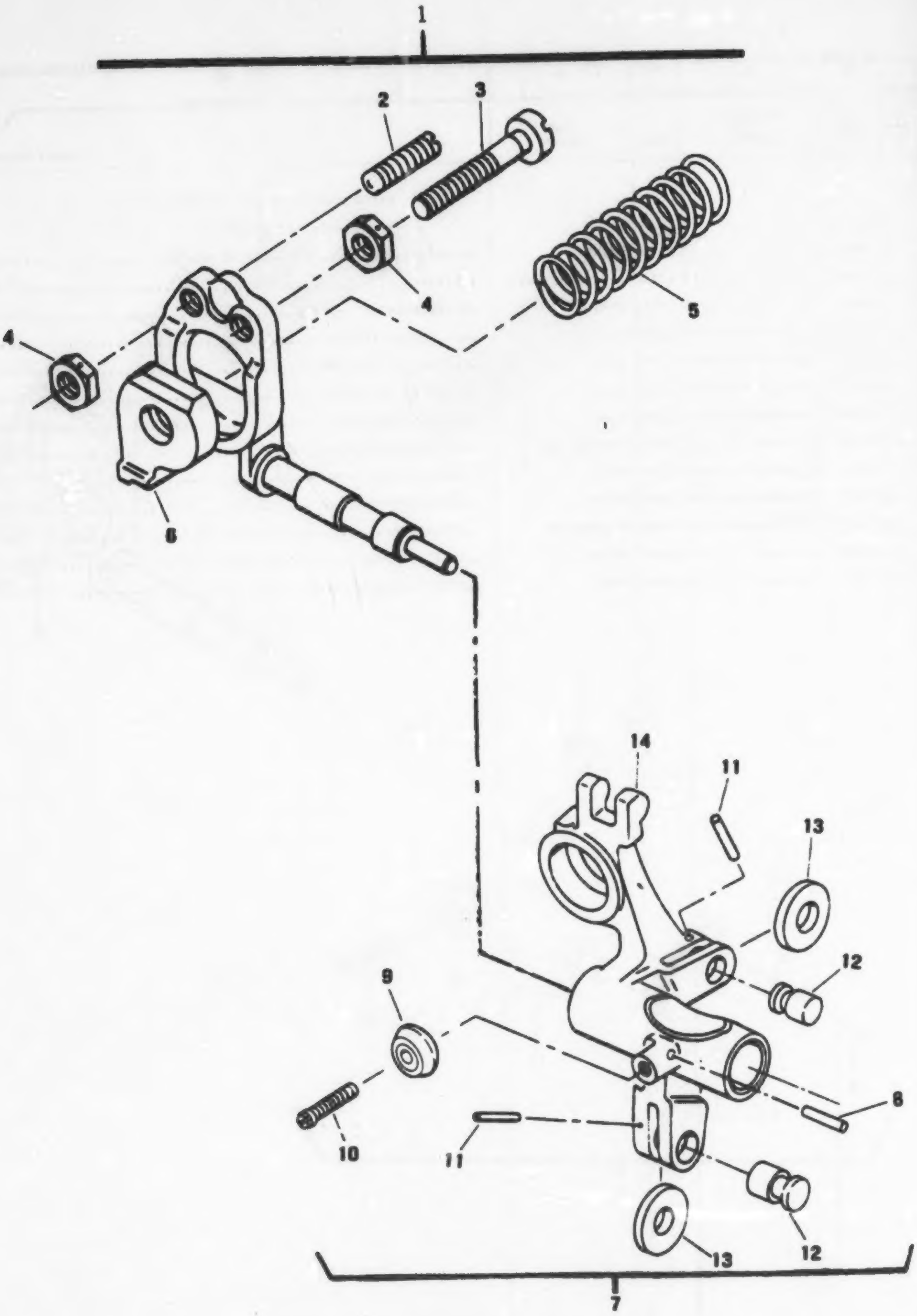

Figure 46. Rockshaft Assembly

(1) ILLUSTRATION (a) FIG NO.	(b) ITEM NO.	(2) SMR CODE	(3) NATIONAL STOCK NUMBER	(4) FSCM	(5) PART NUMBER	(6) DESCRIPTION USABLE ON CODE	(7) U/M	(8) QTY INC IN UNIT
						GROUP 0406 ROCKSHAFT ASSEMBLY		
						(T53-L-13B)		
46	1	AODDD		11599	53131	ROCKSHAFT ASSY,PUMP SEE FIG.41 FOR NHA....................EZL	EA	1
46	2	PAOZZ	5305-00-716-8357	88044	AN565FC1032H1J	.SETSCREW..EZL	EA	1
46	3	PAOZZ	5305-00-944-4273	11599	83501	.SCREW,MACHINE....................................EZL	EA	1
46	4	PAFZZ	5310-00-146-2501	11599	28514-5	.NUT,PLAIN,HEXAGON................................EZL	EA	2
46	5	PAOZZ	5360-00-842-5047	11599	71262	.SPRING,HELICAL,COMP..............................EZL	EA	1
46	6	PAOZZ	2915-00-944-8486	11599	83548	.ROCKSHAFT ASSEMBLY...............................EZL	EA	1
46	7	PAOOD	2915-00-951-0584	11599	74543	.BELLCRANK ASSEMBLY...............................EZL	EA	1
46	8	PAOZZ	5315-00-957-7500	96906	MS51923-169	..PIN,SPRING......................................EZL	EA	1
46	9	PAOZZ	3110-00-953-9408	11599	47013	..BEARING,BALL,ANNULAR............................EZL	EA	1
46	10	PAOZZ	5305-00-756-7054	11599	46414	..SCREW,MACHINE...................................EZL	EA	1
46	11	PAOZZ	5315-00-823-8740	96906	MS16562-192	..PIN,SPRING......................................EZL	EA	2
46	12	PAOZZ	2915-00-706-5214	11599	74538	..SHAFT,STRAIGHT..................................EZL	EA	2
46	13	PAOZZ	3120-00-706-5217	11599	74537	..ROLLER,LINEAR-ROTAR.............................EZL	EA	2
46	14	XAOZZ		11599	74834	..BELLCRANK.......................................EZL	EA	1

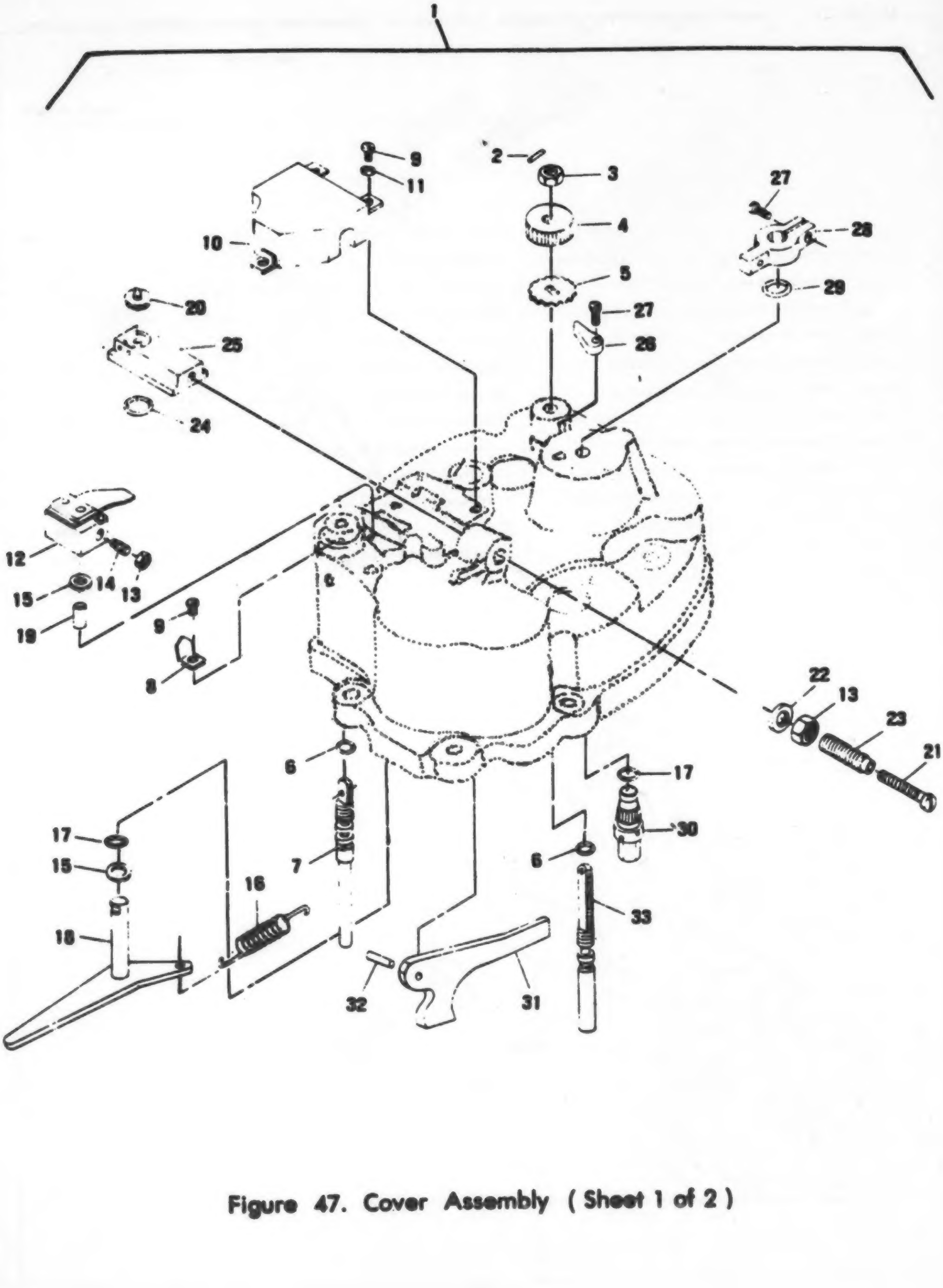

Figure 47. Cover Assembly (Sheet 1 of 2)

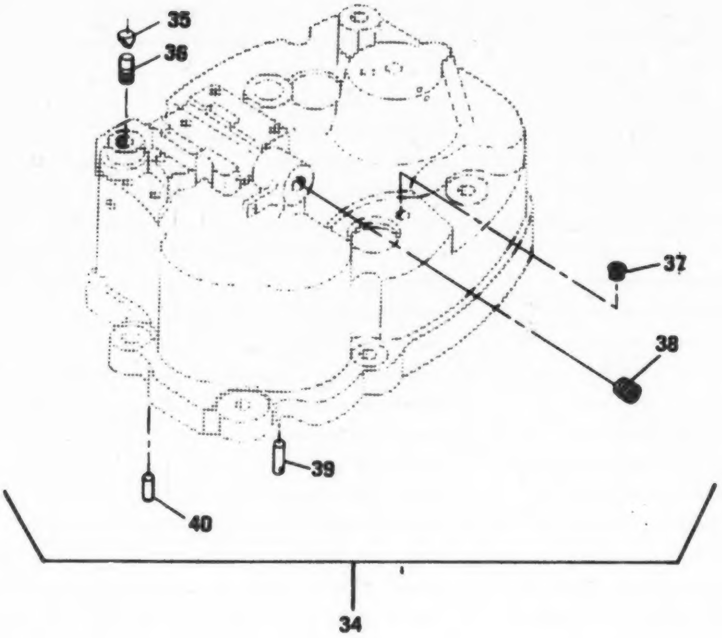

Figure 47. Cover Assembly (Sheet 2 of 2)

(1) ILLUSTRATION (a) FIG NO	(b) ITEM NO	(2) SMR CODE	(3) NATIONAL STOCK NUMBER	(4) FSCM	(5) PART NUMBER	(6) DESCRIPTION USABLE ON CODE	(7) U/M
						GROUP 0406 COVER ASSEMBLY	
						(T53-L-11C,T53-L-11D)	
47	1	AOOOO		11599	75280	COVER ASSEMBLY,COMP....F76,F77	EA
47	2	PAOZZ	5315-00-663-2771	96906	MS51923-167	.PIN,SPRING....F76,F77	EA
47	3	PAOZZ	5310-00-821-2221	11599	28512-1	.NUT,PLAIN,HEXAGO....F76,F77	EA
47	4	PAOZZ	5355-00-587-2076	11599	76716	.DIAL,FLOW STOP....F76,F77	EA
47	5	PAOZZ	2915-00-551-5837	11599	48776	.PLATE,DIAL....F76,F77	EA
47	6	PCOZZ	5330-00-252-6048	96906	MS29513-006	.PACKING,PREFORMED....F76,F77	EA
47	7	PAOZZ	2915-00-577-1052	11599	75243	.SCREW,ADJUSTING,MA....F76,F77	EA
47	8	PAOZZ	5355-00-717-2385	11599	76342	.POINTER,DIAL....F76,F77	EA
47	9	PAOZZ	5305-00-540-5488	96906	MS35275-226	.SCREW,MACHINE....F76,F77	EA
47	10	PAOZZ	2915-00-544-8213	11599	83760	.COVER,MECHANICAL,FU....F76,F77	EA
47	11	PAOZZ	5310-00-678-8552	11599	76478	.WASHER,FLAT....F76,F77	EA
47	12	PAOZZ	2915-00-552-4558	11599	76286	.BLOCK ASSEMBLY....F76,F77	EA
47	13	PAOZZ	5310-00-722-4014	11599	28514-7	.NUT,PLAIN,HEXAGON....F76,F77	EA
47	14	PAOZZ	5305-00-554-0107	11599	76307	.SETSCREW....F76,F77	EA
47	15	PAOZZ	3120-00-678-8553	11599	76283	.BEARING,WASHER,THRU....F76,F77	EA
47	16	PAOZZ	5360-00-850-5009	11599	85686	.SPRING,HELICAL,EXTE....F76,F77	EA
47	17	PCOZZ	5330-00-248-3832	96906	MS29513-007	.PACKING,PREFORMED....F76,F77	EA
47	18	PAOZZ	2915-00-552-4560	11599	76294	.LEVER ASSEMBLY,CUTO....F76,F77	EA
47	19	PAOZZ	3120-00-717-2471	11599	76280	.BEARING,SLEEVE....F76,F77	EA
47	20	PAOZZ	2915-00-847-1666	11599	76295	.VALVE,AIR BLEED....F76,F77	EA
47	21	PAOZZ	5305-00-540-5458	96906	MS35275-236	.SCREW,MACHINE....F76,F77	EA
47	22	PAOZZ	5310-00-167-0814	88044	AN960C516L	.WASHER,FLAT....F76,F77	EA
47	23	PAOZZ	2915-00-553-4588	11599	76317	.STOP,ADJUSTABLE....F76,F77	EA
47	24	PCOZZ	5330-00-248-3838	96906	MS29512-013	.PACKING,PREFORMED....F76,F77	EA
47	25	PAOZZ	2915-00-553-4587	11599	76316	.HOUSING,VALVE,COMPR....F76,F77	EA
47	26	PAOZZ	2915-00-587-0423	11599	77675	.STOP,INDEX ARM....F76,F77	EA
47	27	PAOZZ	5305-00-535-5230	96906	MS35275-243	.SCREW,MACHINE....F76,F77	EA
47	28	PAOZZ	2915-00-551-0576	11599	75775	.ARM,INDEX....F76,F77	EA
47	29	PAOZZ	5365-00-647-2755	11599	46257	.SHIM....F76,F77	EA
47	30	PAOZZ	2915-00-587-0422	11599	77672	.SHAFT ASSEMBLY,SERR....F76,F77	EA
47	31	PAOZZ	2915-00-587-1350	11599	77154	.LEVER,MAX FUEL FLOW....F76,F77	EA
47	32	PAOZZ	5315-00-810-0505	96906	MS16555-628	.PIN,STRAIGHT,HEA....F76,F77	EA
47	33	PAOZZ	2915-00-056-3085	11599	77155	.SCREW,ADJUSTING,FUE....F76,F77	EA
47	34	PAOOO	2915-00-553-4554	11599	77658	.COVER ASSEMBLY....F76,F77	EA
47	35	PAOZZ	5365-00-622-1654	01556	MR5A15	..RING,LOCK,KEYED....F76,F77	EA
47	36	XBOZZ	5340-00-875-6005	11599	28504-9	..INSERT,SCREW THREAD....F76,F77	EA
47	37	PAOZZ	5340-00-680-3782	96906	MS21209C1-15	..INSERT,SCREW THREAD....F76,F77	EA
47	38	PAOZZ	5340-00-250-4660	96906	MS21209F5-10	..INSERT, SCREW TH....F76,F77	EA

(1) ILLUSTRATION		(2)	(3)	(4)	(5)	(6)	(7)	(8)
(a) FIG NO	(b) ITEM NO	SMR CODE	NATIONAL STOCK NUMBER	FSCM	PART NUMBER	DESCRIPTION USABLE ON CODE	U/M	QTY INC IN UNIT
41	39	PAOZZ	5315-00-085-1247	11599	36275	..PIN,STRAIGHT,HDLS.............................[illegible]	EA	1
41	43	PAOZZ	5315-00-954-7164	11599	20950-5-1	..PIN,STRAIGHT,HDLS.............................[illegible]	EA	1
41	42	PAOZZ	5315-00-954-[illegible]	11599	20950-5-2	..PIN,STRAIGHT,HDLS.............................[illegible]	EA	1
41	40	PAOZZ	5315-00-954-1179	11599	20950-5-3	..PIN,STRAIGHT,HDLS.............................[illegible]	EA	1

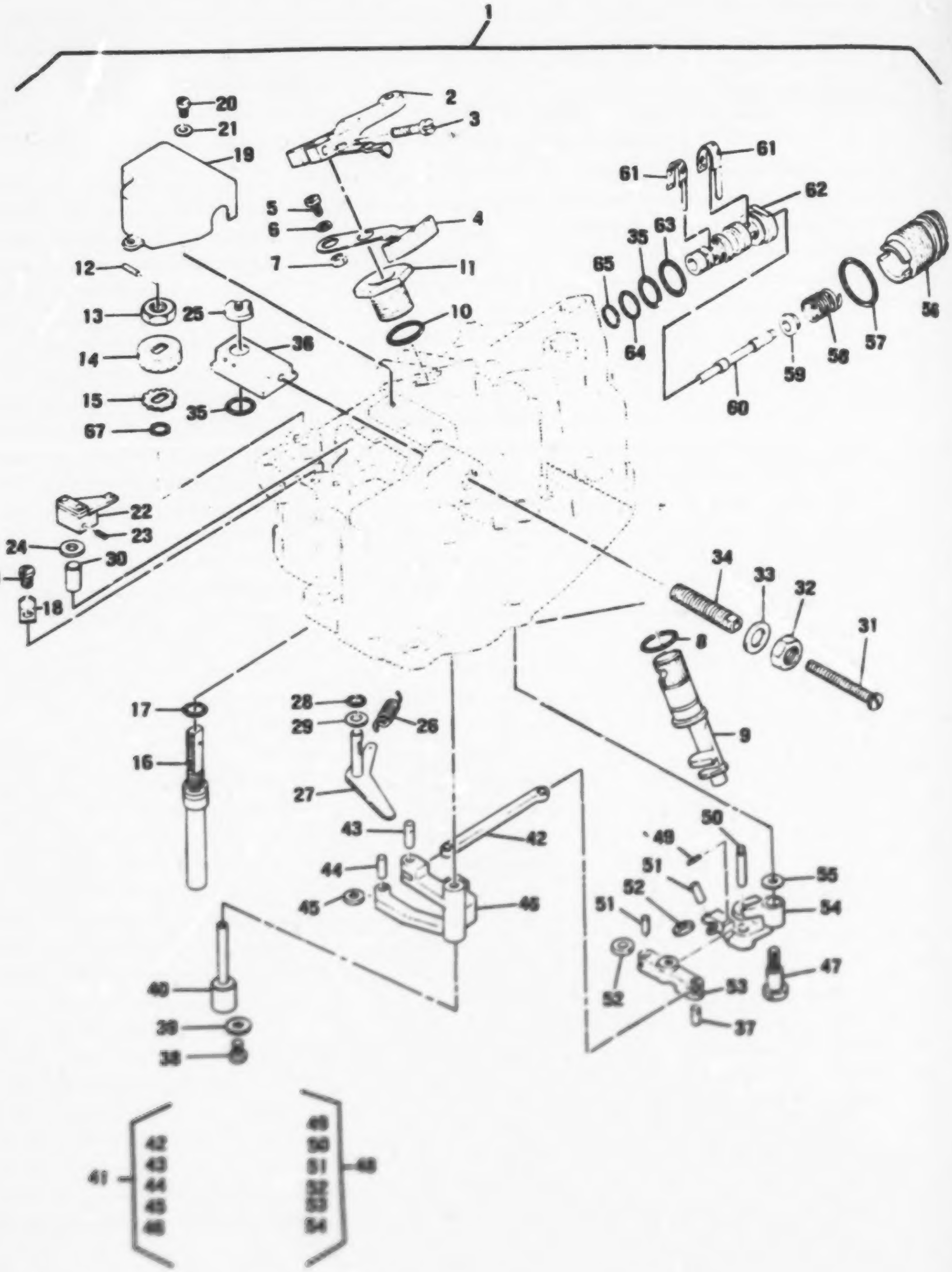

Figure 48. Cover Assembly, Fuel Control (Sheet 1 of 2)

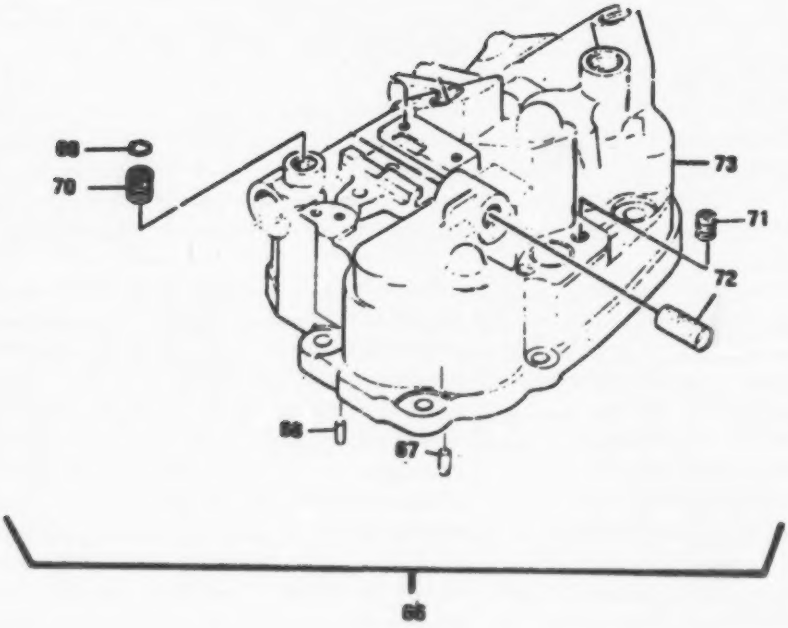

Figure 48. Cover Assembly, Fuel Control (Sheet 2 of 2)

(1) ILLUSTRATION		(2)	(3)	(4)	(5)	(6) DESCRIPTION	(7)	(8)
(a) FIG NO	(b) ITEM NO	SMR CODE	NATIONAL STOCK NUMBER	FSCM	PART NUMBER	USABLE ON CODE	U/M	QTY INC IN UNIT
						GROUP 0406 COVER ASSEMBLY,FUEL CONTROL		
						(T53-L-13B)		
48	1	ACOOD		11599	66735	COVER ASSEMBLY,FUEL SEE FIG.36 FOR NHA..........EZL	EA	1
48	2	PADZZ	2915-00-054-8853	11599	66734	.ARM AND POINTER,FUE..........EZL	EA	1
48	3	PADZZ	5305-00-535-5169	96906	MS35275-264	.SCREW,MACHINE..........EZL	EA	1
48	4	PADZZ	5355-00-051-1666	11599	66732	.DIAL,SCALE..........EZL	EA	1
48	5	PADZZ	5305-00-522-6288	96906	MS35275-228	.SCREW,MACHINE..........EZL	EA	1
48	6	PADZZ	5310-00-678-8552	11599	76478	.WASHER,FLAT..........EZL	EA	1
48	7	PADZZ	5365-00-548-3245	11599	83624	.SPACER,SLEEVE..........EZL	EA	1
48	8	PCDZZ	5330-00-248-3835	96906	MS29513-010	.PACKING,PREFORMED..........EZL	EA	1
48	9	PADZZ	2915-00-544-8312	11599	83474	.SHAFT,FEEDBACK CAM..........EZL	EA	1
48	10	PCDZZ	5330-00-263-8030	96906	MS29512-06	.PACKING,PREFORMED..........EZL	EA	1
48	11	PADZZ	5365-00-547-6288	11599	83481	.BUSHING,MACHINE THR..........EZL	EA	1
48	12	PADZZ	5315-00-863-2371	96906	MS51923-167	.PIN,SPRING..........EZL	EA	1
48	13	PADZZ	5310-00-831-2321	11599	28512-1	.NUT,PLAIN,HEXAGO..........EZL	EA	1
48	14	PADZZ	5355-00-567-3036	11599	76716	.DIAL,FLOW STOP..........EZL	EA	1
48	15	PADZZ	2915-00-551-9437	11599	48776	.PLATE,DIAL..........EZL	EA	1
48	16	PADZZ	2915-00-577-1652	11599	75243	.SCREW,ADJUSTING,MA..........EZL	EA	1
48	17	PCDZZ	5330-00-584-1100	96906	MS9021-036	.PACKING,PREFORMED..........EZL	EA	1
48	18	PADZZ	5355-00-313-2765	11599	76342	.POINTER,DIAL..........EZL	EA	1
48	19	PADZZ	2915-00-544-8313	11599	83760	.COVER,MECHANICAL,FU..........EZL	EA	1
48	20	PADZZ	5305-00-540-5488	96906	MS35275-226	.SCREW,MACHINE..........EZL	EA	4
48	21	PADZZ	5310-00-678-8552	11599	76478	.WASHER,FLAT..........EZL	EA	1
48	22	PADZZ	2915-00-552-4998	11599	76288	.BLOCK ASSEMBLY..........EZL	EA	1
48	23	PADZZ	5305-00-554-0107	11599	76337	.SETSCREW..........EZL	EA	1
48	24	PADZZ	3120-00-838-8553	11599	76283	.BEARING,WASHER,THRU..........EZL	EA	1
48	25	PADZZ	2915-00-843-1666	11599	76285	.VALVE,AIR BLEED..........EZL	EA	1
48	26	PADZZ	5360-00-896-5005	11599	85080	.SPRING,HELICAL,EXTE..........EZL	EA	1
48	27	PADZZ	2915-00-552-4900	11599	76294	.LEVER ASSEMBLY,CUTO..........EZL	EA	1
48	28	PCDZZ	5330-00-248-3832	96906	MS29513-007	.PACKING,PREFORMED..........EZL	EA	1
48	29	PADZZ	3120-00-870-0993	11599	76293	.BEARING,WASHER,THRU..........EZL	EA	1
48	30	PADZZ	3120-00-719-1471	11599	76296	.BEARING,SLEEVE..........EZL	EA	1
48	31	PADZZ	5305-00-946-5917	88044	AN500A10-32	.SCREW,MACHINE..........EZL	EA	1
48	32	PADZZ	[illegible]	11599	28514-7	.NUT,PLAIN,[illegible]..........EZL	EA	1
48	33	PADZZ	[illegible]	88044	AN960C[illegible]	.WASHER,FLAT..........EZL	EA	1
48	34	PADZZ	[illegible]	11599	83981	.SETSCREW..........EZL	EA	1
48	35	PCDZZ	[illegible]	96906	MS29513-[illegible]	.PACKING,PREFORMED..........EZL	EA	1
48	36	PADZZ	[illegible]	11599	[illegible]	.ADJUSTING WEIGHT,[illegible]..........EZL	EA	1
48	37	PADZZ	[illegible]	11599	[illegible]	.PIN,STRAIGHT,HEADLE..........EZL	EA	1
48	38	PADZZ	[illegible]	96906	MS35275-[illegible]	.SCREW,MACHINE..........EZL	EA	1

(1) ILLUSTRATION (a) FIG NO.	(b) ITEM NO	(2) SMR CODE	(3) NATIONAL STOCK NUMBER	(4) FSCM	(5) PART NUMBER	(6) DESCRIPTION USABLE ON CODE	(7) U/M	(8) QTY INC IN UNIT
48	39	PAOZZ	5310-00-558-6207	88044	AN960C8L	.WASHER,FLAT.....FZL	EA	1
48	40	PAOZZ	5315-00-552-7350	11599	63768	.PIN,SHOULDER,HEADLE.....FZL	EA	1
48	41	AOOOO		11599	64256	.ARM FOLLOWER AND BE.....FZL	EA	1
48	42	PAOZZ	3040-00-547-6264	11599	63475	..CONNECTING LINK,RIG.....FZL	EA	1
48	43	PAOZZ	5315-00-554-8565	11599	64015	..PIN,STRAIGHT,HEADLE.....FZL	EA	1
48	44	PAOZZ	5315-00-547-6254	11599	62282	..PIN,STRAIGHT,HEADLE.....FZL	EA	1
48	45	PAOZZ	3120-00-524-3558	11599	63485	..BEARING,PLAIN,SPHER.....FZL	EA	1
48	46	PAOZZ	2915-00-544-8248	11599	63747	..ARM,CAM FOLLOWER.....FZL	EA	1
48	47	PAOZZ	5305-00-544-4230	11599	63483	.SCREW,SHOULDER.....FZL	EA	1
48	48	AOOOO		11599	64257	.LEVER ASSEMBLY,FUEL.....FZL	EA	1
48	49	PAOZZ	5315-00-553-7500	96906	MS51923-169	..PIN,SPRING.....FZL	EA	1
48	50	PAOZZ	5315-00-544-1098	11599	78112-11	..PIN,GROOVED,HEADLES.....FZL	EA	1
48	51	PAOZZ	5315-00-781-4146	11599	63484	..PIN,STRAIGHT,HEADLE.....FZL	EA	2
48	52	PAOZZ	3120-00-524-3558	11599	63485	..BEARING,PLAIN,SPHER.....FZL	EA	2
48	53	PAOZZ	2915-00-544-8425	11599	63482	..LEVER,SERVO VALVE.....FZL	EA	1
48	54	PAOZZ	2915-00-544-8509	11599	63532	..LEVER,FEEDBACK CAM.....FZL	EA	1
48	55	PAOZZ	5310-00-554-2346	11599	74551	.WASHER,FLAT.....FZL	EA	1
48	56	PAOZZ	2915-00-544-8521	11599	63490	.CAP,SERVO VALVE.....FZL	EA	1
48	57	PCOZZ	5330-00-248-3845	96906	MS29513-019	.PACKING,PREFORME.....FZL	EA	1
48	58	PAOZZ	5360-00-564-1216	11599	63488	.SPRING,HELICAL,COMP.....FZL	EA	1
48	59	PAOZZ	2915-00-547-6265	11599	63489	.SEAT,HELICAL COMPRE.....FZL	EA	1
48	60	PAOOO	2915-00-544-8529	11599	63492	.VALVE ASSEMBLY,COVE.....FZL	EA	1
48	61	PAOZZ	2915-00-842-0142	11599	65506	..STRAINER ELEMENT,SE.....FZL	EA	2
48	62	XAOZZ		11599	76133	..SLEEVE,GOVERNOR SER.....FZL	EA	1
48	63	PCOZZ	5330-00-248-3840	96906	MS29513-014	.PACKING,PREFORMED.....	EA	1
48	64	PCOZZ	5330-00-248-3826	96906	MS29513-012	.PACKING,PREFORMED.....FZL	EA	1
48	65	PCOZZ	5330-00-248-3871	96906	MS29513-011	.PACKING,PREFORMED.....FZL	EA	1
48	66	PAOOO	2915-00-842-0129	11599	66032	.COVER ASSEMBLY,FUEL.....FZL	EA	1
48	67	PAOZZ	5315-00-089-1267	11599	76275	..PIN,STRAIGHT,HEADLE.....FZL	EA	1
48	68	PAOZZ	5315-00-554-3104	11599	20958-9-1	..PIN,STRAIGHT,HEA.....FZL	EA	1
48	68	PAOZZ	5315-00-554-1130	11599	20958-9-2	..PIN,STRAIGHT,HEA.....FZL	EA	1
48	68	PAOZZ	5315-00-554-1179	11599	20958-9-5	..PIN,STRAIGHT,HEA.....FZL	EA	1
48	69	PAOZZ	5305-00-433-1354	01990	085019	..PLUG,LOCK,KEYED.....FZL	EA	1
48	70	XBOZZ	5340-00-839-0029	11599	20960-5	..INSERT,SCREW THREAD.....FZL	EA	1
48	71	PAOZZ	5340-00-[illegible]	96906	MS21209C1-15	..INSERT,SCREW THREAD.....FZL	EA	2
48	72	PAFZZ	5340-00-[illegible]	96906	MS21209F1-15	..INSERT, SCREW TH.....FZL	EA	1
48	73	XAOZZ		11599	[illegible]	..COVER AND PLUG ASSY.....FZL	EA	1

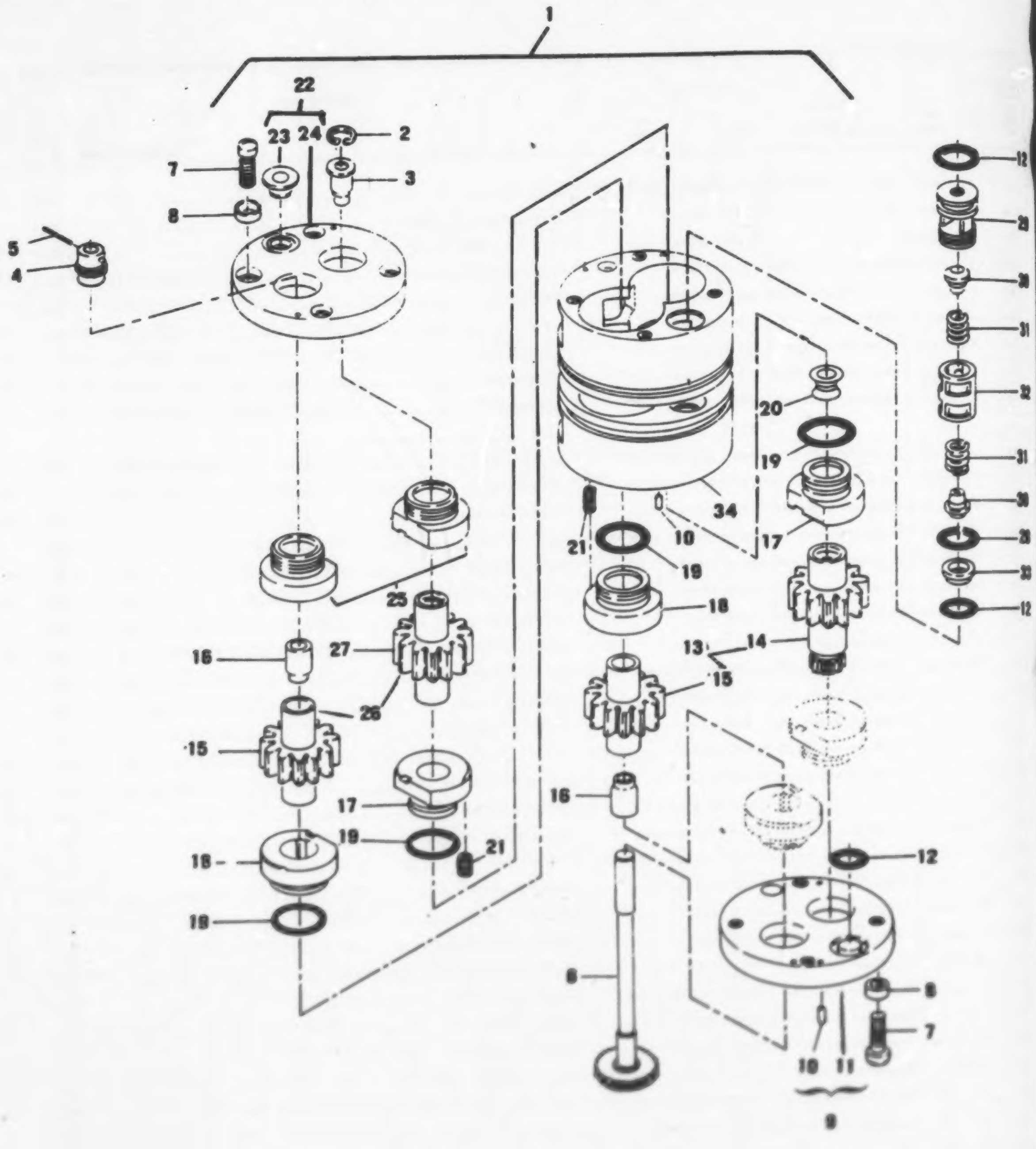

Figure 49. Pump Assembly

(1) ILLUSTRATION (a) FIG NO.	(b) ITEM NO	(2) SMR CODE	(3) NATIONAL STOCK NUMBER	(4) FSCM	(5) PART NUMBER	(6) DESCRIPTION USABLE ON CODE	(7) U/M	(8) QTY INC IN UNIT
						GROUP 0406 PUMP ASSEMBLY		
45	1	PBDDD	4320-00-552-1154	11599	87352	PUMP,ROTARY SEE FIG.27 FOR NHA	EA	1
45	2	PADZZ	5365-00-804-6855	96906	MS16625-4037	.RING,RETAINING	EA	1
45	3	PADZZ	2915-00-472-5345	11599	45610	.STOP,DRIVE SHAFT	EA	1
45	4	PADZZ	3020-00-471-5521	11599	41238	.GEAR,SPUR	EA	1
45	5	PADZZ	5315-00-822-8740	96906	MS16562-152	.PIN,SPRING	EA	1
45	6	PADZZ	2915-00-552-1134	11599	73877	.GEAR AND SHAFT ASSE	EA	1
45	7	PADZZ	5305-00-535-5189	96906	MS35275-264	.SCREW,MACHINE	EA	8
45	8	PADZZ	5310-00-447-2065	11599	46791	.WASHER,RECESSED	EA	8
45	9	PADDD	2915-00-992-1152	11599	75655	.PLATE ASSEMBLY,BOTT	EA	1
45	10	PADZZ	5315-00-831-2325	11599	46331	..PIN,STRAIGHT,HEA	EA	2
45	11	XADZZ		11599	75203	..PLATE,BOTTOM	EA	1
45	12	PCFZZ	5330-00-248-3838	96906	MS29513-013	.PACKING,PREFORMED	EA	2
45	13	PADZZ	3020-00-585-3003	11599	75167	.GEAR SET,SPUR	EA	1
45	14	XADZZ		11599	48525	..GEAR,PUMPING DRIVER	EA	1
45	15	XADZZ		11599	74891	..GEAR ASSEMBLY,DRIVE	EA	1
45	16	PADZZ	3120-00-757-2881	11599	74867	...BEARING,SLEEVE	EA	2
45	17	PADZZ	2915-00-775-7825	11599	45155	.SUPPORT,GEARSHAFT,F	EA	2
45	18	PADZZ	3120-00-775-7828	11599	45157	.BEARING,SLEEVE	EA	2
45	19	PADZZ	5330-00-460-5355	96906	MS29513-015	.PACKING,PREFORMED	EA	4
45	20	PADZZ	2915-00-450-2322	11599	45835	.SEAL,CHIP,MAIN DRIV	EA	1
45	21	PADZZ	5360-00-354-3085	11599	46895	.SPRING,HELICAL,COMP	EA	24
45	22	PADDD	2915-00-544-1102	11599	84464	.PLATE ASSEMBLY,PUMP	EA	1
45	23	XBDZZ		11599	84467	..BEARING,TOP PUMP PL ...E77	EA	1
45	23	PADZZ	3120-00-544-5413	11599	84467FC33	..BEARING,SLEEVE	EA	1
45	23	PADZZ	3120-00-100-4365	11599	84467FC36	..BEARING,SLEEVE	EA	1
45	23	PADZZ	3120-00-033-0040	11599	84467FC39	..BEARING,SLEEVE	EA	1
45	24	XADZZ		11599	84469	..PLATE,TOP	EA	1
45	25	PADZZ	2915-00-739-3827	11599	45163	.SUPPORT,GEARSHAFT,F ...E76,E77	EA	1
45	26	PADZZ	3020-00-088-8832	11599	75168	.GEAR SET,SPUR,MATCH ...E76,E77	EA	1
45	27	XADZZ		11599	48530	..GEAR,PUMPING DRIVER ...E76,E77	EA	1
45	28	PCDZZ	5330-00-248-3836	96906	MS29513-012	.PACKING,PREFORMED	EA	2
45	29	PADZZ	2915-00-593-4566	11599	75136	.SEAT,CHECK VALVE,UP	EA	1
45	30	PADZZ	4820-00-552-1127	11599	76857	.VALVE,CHECK	EA	2
45	31	PADZZ	5360-00-828-2929	11599	46358	.SPRING,HELICAL,COMP	EA	2
45	32	PADZZ	2915-00-993-4996	11599	76187	.SLEEVE AND GUIDE AS	EA	[illegible]
45	33	PADZZ	2915-00-993-[illegible]	11599	75133	.SEAT,CHECK VALVE,LO	EA	[illegible]
45	34	PADZZ	2915-00-739-3812	11599	48261	.BODY ASSEMBLY,PUMP	EA	[illegible]

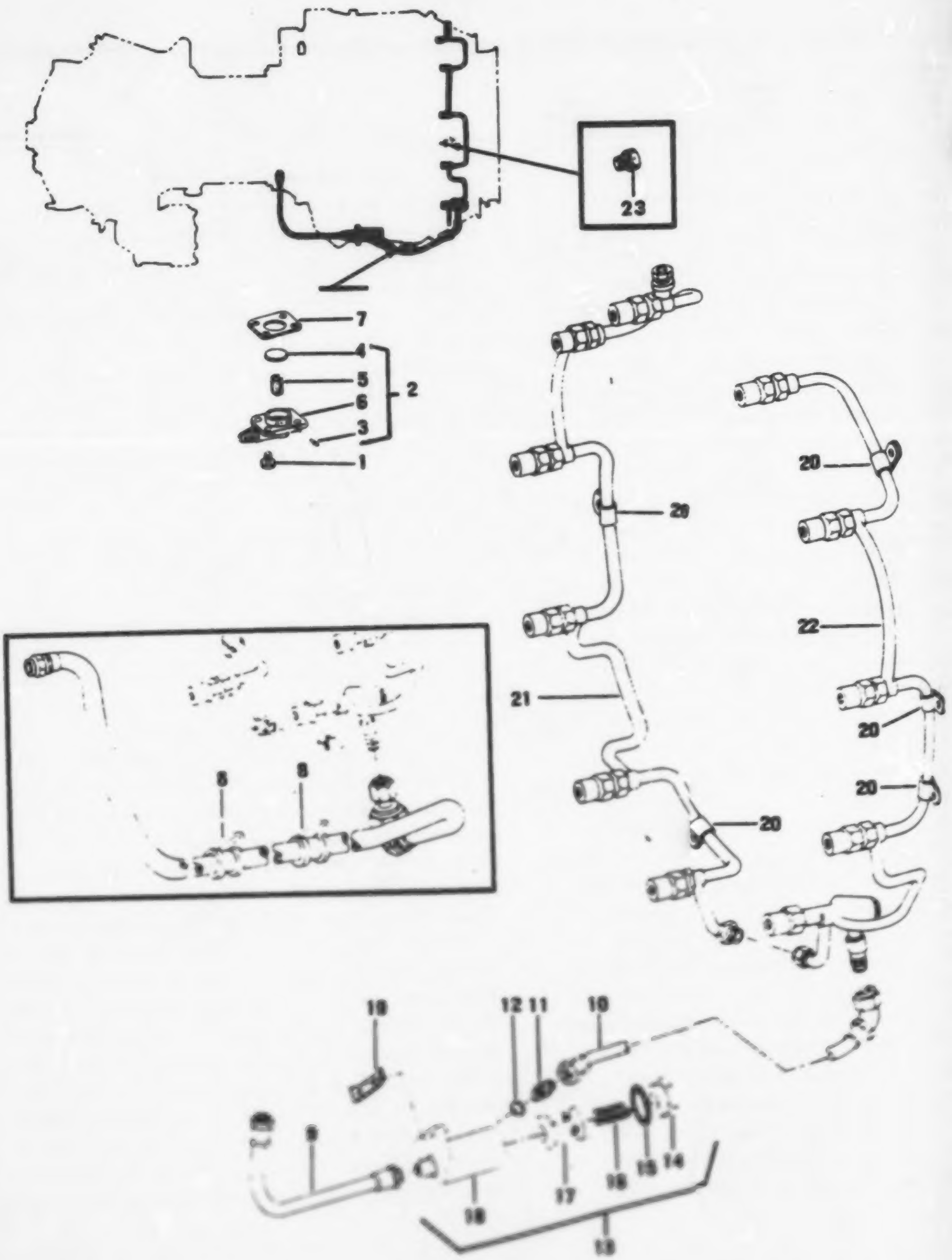

Figure 50. Main Fuel System and Combustion Chamber Drain Valve Assembly

(1) ILLUSTRATION (a) FIG NO	(b) ITEM NO	(2) SMR CODE	(3) NATIONAL STOCK NUMBER	(4) FSCM	(5) PART NUMBER	(6) DESCRIPTION USABLE ON CODE	(7) U/M	(8) QTY INC IN UNIT
						GROUP 0406 MAIN FUEL SYSTEM AND COMBUSTION CHAMBER DRAIN VALVE ASSEMBLY (T53-L-11C,T53-L-11D)		
50	1	PAOZZ	5306-00-281-2988	88044	AN106406	BOLT,MACHINE....E76,E77	EA	4
50	2	PAOOO	2915-00-858-8828	51547	1-160-220-02	VALVE,DRAIN,FUEL SY....E76,E77	EA	1
50	3	PAOZZ	5315-00-775-6553	51547	1-160-178-01	.PIN,STRAIGHT,HEA....E76,E77	EA	2
50	4	PAOZZ	2840-00-858-8548	51547	1-160-125-01	.PLATE,DRAIN VALVE,C....E76,E77	EA	1
50	5	PAOZZ	5360-00-775-6513	51547	1-160-126-01	.SPRING,HELICAL,COMP....E76,E77	EA	1
50	6	XAOZZ		51547	1-160-124-01	.BODY,DRAIN VALVE....E76,E77	EA	1
50	7	PAOZZ	5330-00-854-8534	51547	1-160-045-01	GASKET....E76,E77	EA	1
50	8	PAOZZ	5340-00-523-3514	81556	EA8700-7	CLAMP,LOOP....E76,E77	EA	2
50	9	PAOZZ	4720-00-556-2542	51547	1-300-208-01	HOSE ASSEMBLY,NONME....E76,E77	EA	1
50	10	PAOZZ	4720-00-551-6473	00624	666303-15	HOSE ASSEMBLY NONME....E76,E77	EA	1
50	11	PAOZZ	4730-00-684-6516	96906	MS2439206	NIPPLE,TUBE....E76,E77	EA	1
50	12	PCOZZ	5330-00-263-8030	96906	MS29512-06	PACKING,PREFORMED....E76,E77	EA	1
50	13	AOOOO		51547	1-170-230-02	HOUSING ASSEMBLY,FI....E76,E77	EA	1
50	14	PAOZZ	5365-00-583-6053	51547	1-160-595-01	.PLUG,MACHINE THREAD....E76,E77	EA	1
50	15	PAOZZ	5330-00-263-8032	96906	MS29512-10	.PACKING,PREFORME....E76,E77	EA	1
50	16	PAOZZ	5360-00-583-7359	51547	1-160-586-02	.SPRING,HELICAL,COMP....E76,E77	EA	1
50	17	PAOZZ	2915-00-554-4237	73370	126224	.STRAINER ELEMENT,SE....E76,E77	EA	1
50	18	PAOZZ	2915-00-052-4435	51547	1-160-584-01	.HOUSING,FILTER,FUEL....E76,E77	EA	1
50	19	PAOZZ	2840-00-064-5432	51547	1-160-325-01	LOCKING PLATE,NUT A....E76,E77	EA	1
50	20	PAOZZ	5340-00-533-3511	81556	EA8700-4	CLAMP,SUPPORT....E76,E77	EA	5
50	21	PCOOO	2915-00-478-6026	51547	1-160-160-13	MANIFOLD ASSY,MAIN SEE FIG.51 FOR BREAKDOWN....E76,E77	EA	1
50	22	PAOOO	2915-00-478-6027	51547	1-160-160-09	MANIFOLD ASSY,MAIN SEE FIG.51 FOR BREAKDOWN....E76,E77	EA	1
50	23	PAOZZ	5365-00-565-1156	96906	MS5404-04	PLUG,MACHINE THREAD....E76,E77	EA	2

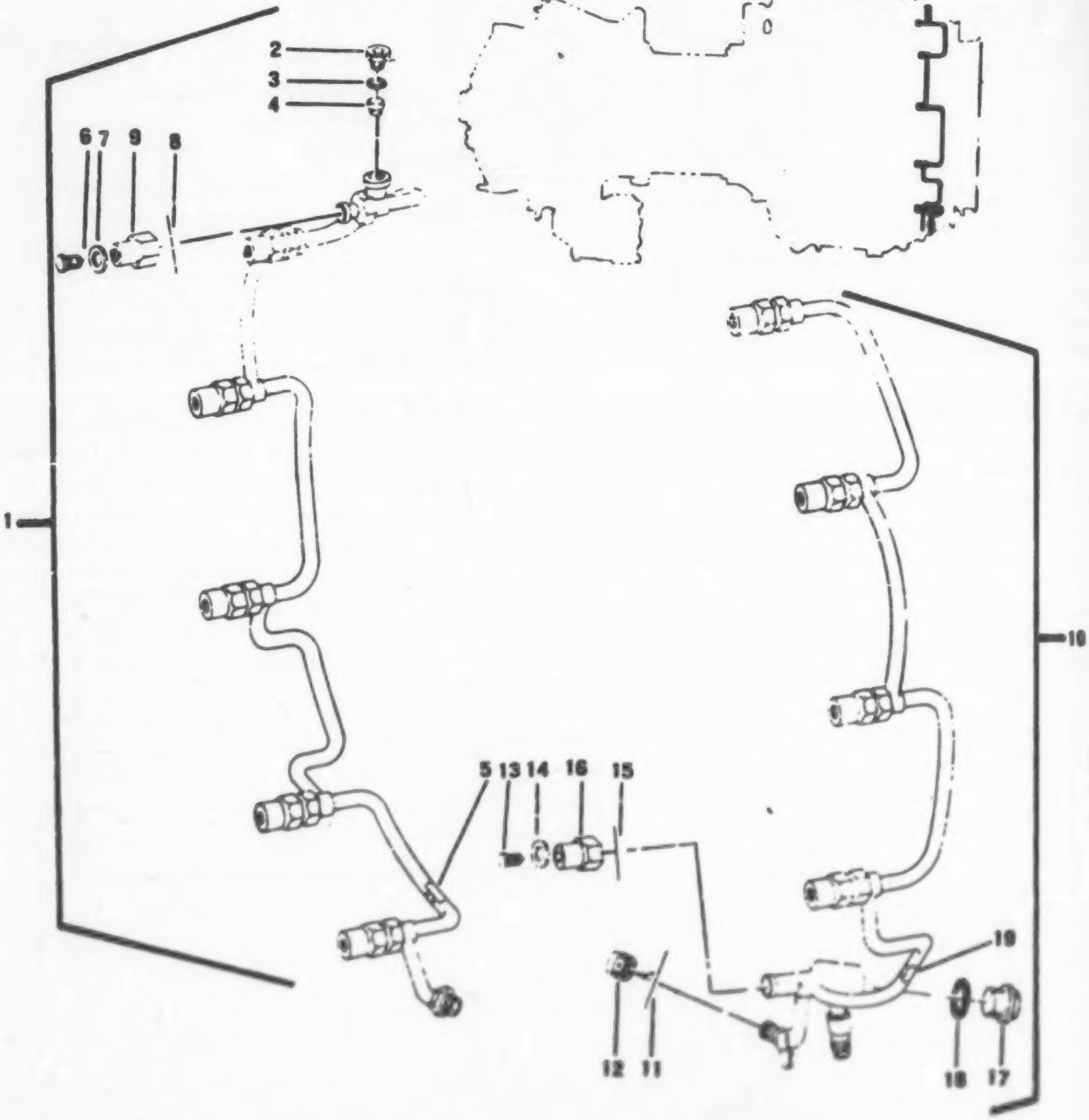

Figure 51. Manifold Assembly

(1) ILLUSTRATION (a) FIG NO	(b) ITEM NO	(2) SMR CODE	(3) NATIONAL STOCK NUMBER	(4) FSCM	(5) PART NUMBER	(6) DESCRIPTION USABLE ON CODE	(7) U/M	(8) QTY INC IN UNIT
						GROUP 0406 MANIFOLD ASSEMBLY		
						(T53-L-11C,T53-L-11D)		
51	1	PCOOO	2915-00-478-6026	51547	1-160-160-10	MANIFOLD ASSY,MAIN SEE FIG.50 FOR NHA................E76,E77	EA	1
51	2	PAOZZ	5365-00-144-6563	96906	MS9404-02	.PLUG,MACHINE THR.......................................E76,E77	EA	1
51	3	PCOZZ	5330-00-256-4525	96906	MS29512-02	.PACKING,PREFORMED......................................E76,E77	EA	1
51	4	PAOZZ	2915-00-736-7654	51547	1-160-880-01	.STRAINER ELEMENT,SE....................................E76,E77	EA	1
51	5	PAOZZ	9905-00-483-1256	51547	1-160-583-02	.PLATE,IDENTIFICATIO....................................E76,E77	EA	1
51	6	PAOZZ	2915-00-551-5145	71855	12128	.INJECTOR,FUEL METER....................................E76,E77	EA	6
51	7	PAFZZ	5330-00-078-5533	51547	1-160-629-02	.GASKET...E76,E77	EA	6
51	8	PAOZZ	5315-00-655-6162	51547	1-160-095-01	.PIN,STRAIGHT,HEADLE USED AS WIRE,SEAL..................E76,E77	EA	11
51	9	PAOZZ	2915-00-654-5577	51547	1-160-096-01	.NUT,FUEL MANIFOLD......................................E76,E77	EA	11
51	10	PAUDD	2915-00-478-6027	51547	1-160-160-09	MANIFOLD ASSY,MAIN FUEL,LEFT SIDE SEE FIG.50 FOR NHA.....E76 E77	EA	1
51	11	PAOZZ	5315-00-660-0812	51547	1-160-122-01	.PIN,STRAIGHT,HEADLE USED AS WIRE,SEAL..................E76,E77	EA	1
51	12	PAOZZ	2915-00-654-5575	51547	1-160-123-01	.NUT,FUEL MANIFOLD......................................E76,E77	EA	1
51	13	PAOZZ	2915-00-551-5145	71855	12128	.INJECTOR,FUEL METER....................................E76,E77	EA	6
51	14	PAOZZ	5330-00-078-5533	51547	1-160-629-02	.GASKET...E76,E77	EA	6
51	15	PAOZZ	5315-00-655-6162	51547	1-160-095-01	.PIN,STRAIGHT,HEADLE USED AS WIRE SEAL..................E76,E77	EA	6
51	16	PAOZZ	2915-00-654-5577	51547	1-160-096-01	.NUT,FUEL MANIFOLD......................................E76,E77	EA	6
51	17	PAOZZ	5365-00-585-4424	51547	1-160-576-01	.PLUG,MACHINE THREAD....................................E76,E77	EA	1
51	18	PCOZZ	5330-00-248-3845	96906	MS29513-016	.PACKING,PREFORMED......................................E76,E77	EA	1
51	19	PAOZZ	9905-00-483-1257	51547	1-160-582-03	.PLATE,IDENTIFICATIO....................................E76,E77	EA	1

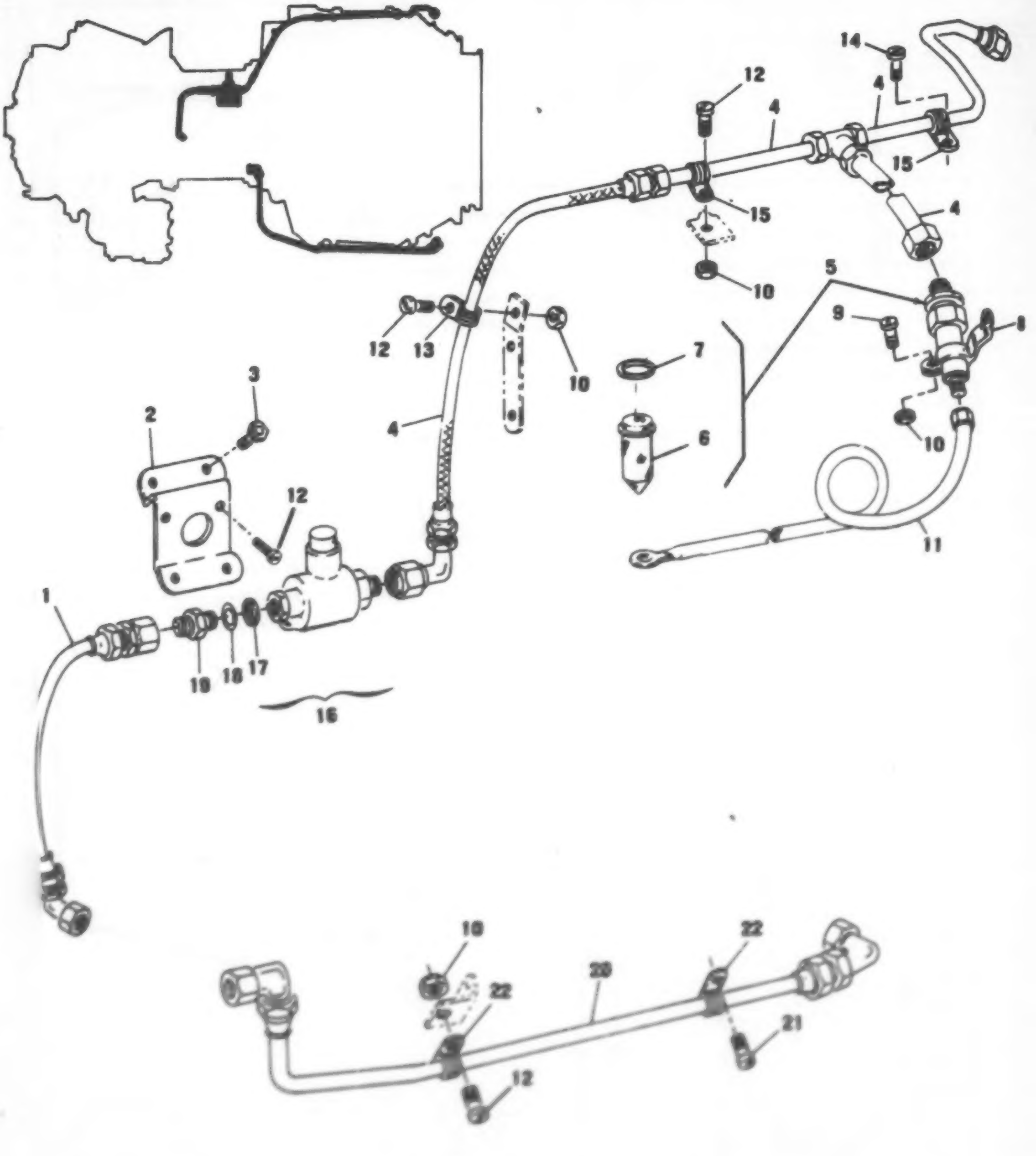

Figure 52. Fuel System and Combustion Chamber Drain Valve Assembly (Sheet 1 of 2)

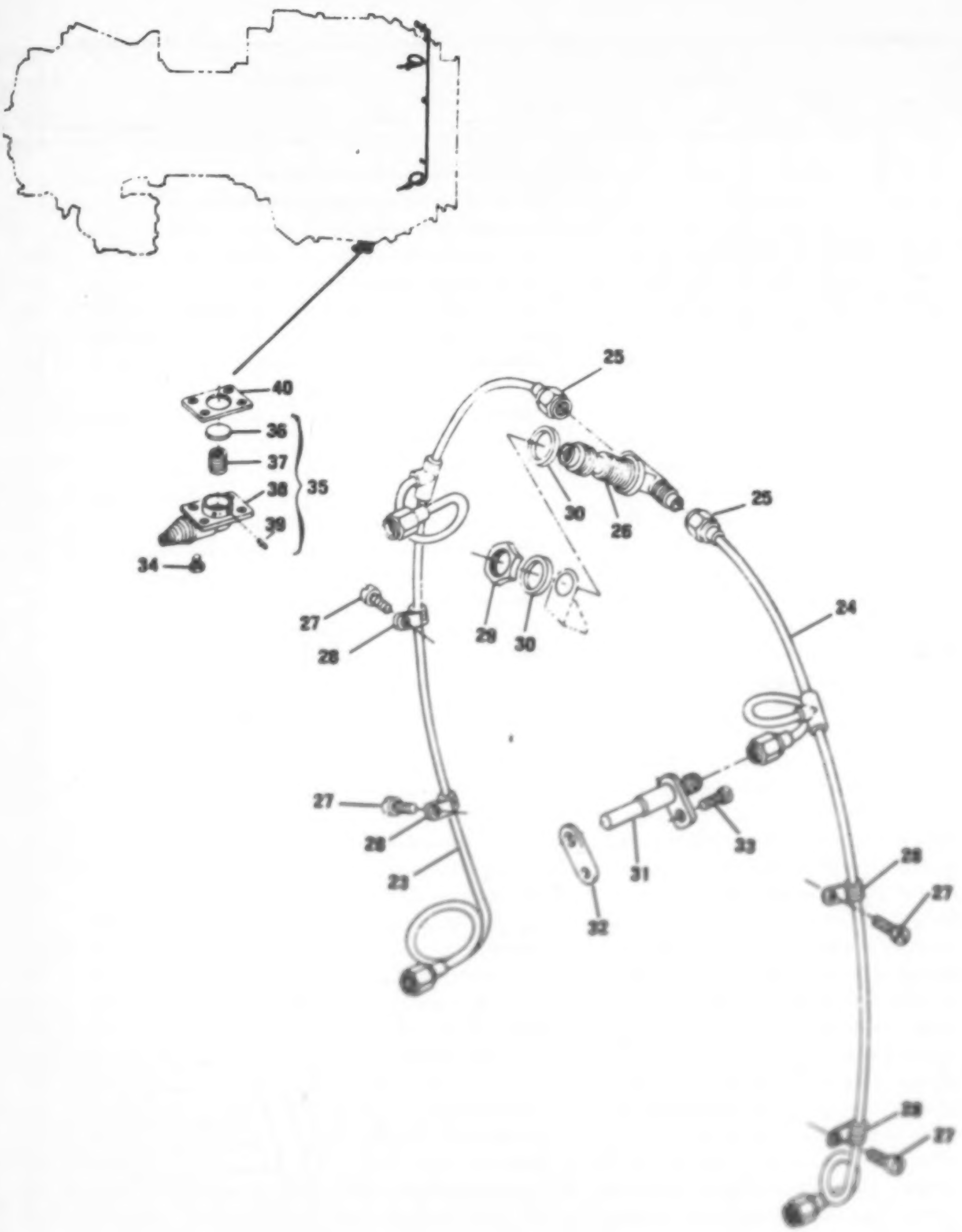

Figure 52. Fuel System and Combustion Chamber Drain Valve Assembly (Sheet 2 of 2)

SECTION II

(1) ILLUSTRATION (a) FIG NO.	(b) ITEM NO.	(2) SMR CODE	(3) NATIONAL STOCK NUMBER	(4) FSCM	(5) PART NUMBER	(6) DESCRIPTION USABLE ON CODE	(7) U/M	(8) QTY INC IN UNIT
						GROUP 0406 FUEL SYSTEM AND COMBUSTION CHAMBER DRAIN VALVE ASSEMBLY (T53-L-13B)		
52	1	PAOZZ	4720-00-856-4756	51547	1-300-244	HCSE ASSEMBLY,NCAME....F71	EA	1
52	2	PAOZZ	2840-00-776-7055	51547	1-160-890-01	BRACKET,PRIMER VALV....F7L	EA	1
52	3	PAOZZ	5306-00-258-2809	88044	AN103707	BOLT,MACHINE....F71	EA	4
52	4	PAOZZ	2915-00-134-1114	51547	1-300-403	TUBE AND HOSE ASSY....E7L	EA	1
52	5	PAOCO	4820-00-134-1113	51547	1-300-398	VALVE,CHECK....F7L	EA	1
52	6	PAOZZ	2915-00-404-3377	52003	2671182	.STRAINER ELEMENT,SE....F7L	EA	1
52	7	PAOZZ	5330-00-411-4436	52003	2671183	.GASKET....F7L	EA	1
52	8	PAOZZ	5340-00-181-1665	51547	1-170-450-02	BRACKET AND CLAMP L....F7L	EA	1
52	9	PAOZZ	5305-00-912-4818	96906	MS35276-261	SCREW,MACHINE....F7L	EA	1
52	10	PAOZZ	5310-00-807-1467	96906	MS21042-3	NUT,SELF-LOCKING,EX....F7L	EA	1
52	11	PAOZZ	4710-00-134-0063	51547	1-170-500-01	TUBE ASSEMBLY,METAL....F7L	EA	1
52	12	PAOZZ	5305-00-150-5212	88044	AN502-10-8	SCREW,MACHINE....F71	EA	4
52	13	PAOZZ	5340-00-533-3512	81996	EA870C-5	CLAMP,LOOP....F7L	EA	1
52	14	PAOZZ	5305-00-912-4816	96906	MS35276-259	SCREW,MACHINE....F7L	EA	1
52	15	PAOZZ	5340-00-533-3511	81996	EA870C-4	CLAMP,SUPPORT....F71	EA	2
52	16	PAOZZ	4810-00-087-7652	51547	1-300-191-05	VALVE,SOLENOID,STAR....F7L	EA	1
52	17	PAOZZ	2915-00-072-4411	98588	7103-78	.STRAINER ELEMENT,SE....F7L	EA	
52	18	PCOZZ	5330-00-263-8028	96906	MS29512-04	PACKING,PREFORMED....F7L	EA	
52	19	PAOZZ	4730-00-834-5960	96906	MS2439204	NIPPLE,TUBE....E7L	EA	
52	20	PAOZZ	4720-00-966-2205	51547	1-300-139	HCSE ASSEMBLY,ACAME....F7L	EA	
52	21	PAOZZ	5305-00-965-6467	96906	MS35266-59	SCREW,MACHINE....F7L	EA	
52	22	PAOZZ	5340-00-533-3513	81996	EA870C-6	CLAMP,LOOP....F71	EA	
52	23	PAOCD	2915-00-945-5900	51547	1-170-430-01	MANIFOLD ASSEMBLY,F....F71	EA	
52	24	PAODD	2915-00-945-5864	51547	1-170-420-01	MANIFOLD ASSEMBLY,F....F71	EA	
52	25	PAOZZ	4730-00-540-4363	88044	AN818-2C	.NUT,TUBE COUPLING....E71	EA	
52	26	PAOZZ	4730-00-557-7583	51547	1-160-322-01	TEE,TUBE....F7L	EA	
52	27	PAOZZ	5305-00-965-6467	96906	MS35266-59	SCREW,MACHINE....F71	EA	
52	28	PAOZZ	5340-00-533-3510	81996	EA870C-2	CLAMP,LOOP....F7L	EA	
52	29	PAOZZ	5310-00-208-5765	88044	AN924-4	NUT,FLAIR,HEXAGON....F71	EA	
52	30	PAOZZ	5310-00-167-0805	88044	AN960C716	WASHER,FLAT....F71	EA	
52	31	PAOZZ	2915-00-782-3815	51547	1-300-405	NOZZLE,FUEL,COMBUST....F7L	EA	
52	32	PAOZZ	5330-00-179-4207	51547	1-160-362-03	GASKET....F7L	EA	
52	33	PAOZZ	5305-00-543-2753	96906	MS35266-61	SCREW,MACHINE....E7L	EA	
52	34	PAOZZ	5306-00-281-2588	88044	AN104406	BOLT,MACHINE....F7L	EA	
52	35	PAODD	2915-00-924-3960	51547	1-160-220-03	VALVE,FUEL DRAIN....F71	EA	
52	36	PAOZZ	2840-00-656-8548	51547	1-160-125-01	.PLATE,DRAIN VALVE,C....F71	EA	
52	37	PAOZZ	5360-00-779-6513	51547	1-160-126-01	.SPRING,HELICAL,COMP....F7L	EA	

(1) ILLUSTRATION (a) FIG NO	(b) ITEM NO	(2) SMR CODE	(3) NATIONAL STOCK NUMBER	(4) FSCM	(5) PART NUMBER	(6) DESCRIPTION USABLE ON CODE	(7) U/M	(8) QTY INC IN UNIT
52	38	XADZZ		51547	1-16C-124-03	.VALVE,BODY DRAIN....................F71	EA	1
52	39	PADZZ	5315-00-775-6553	51547	1-16C-178-01	.PIN,STRAIGHT,HDD....................F71	EA	2
52	40	PADZZ	5330-00-654-6534	51547	1-16C-045-01	GASKET....................F71	EA	1

best copy available

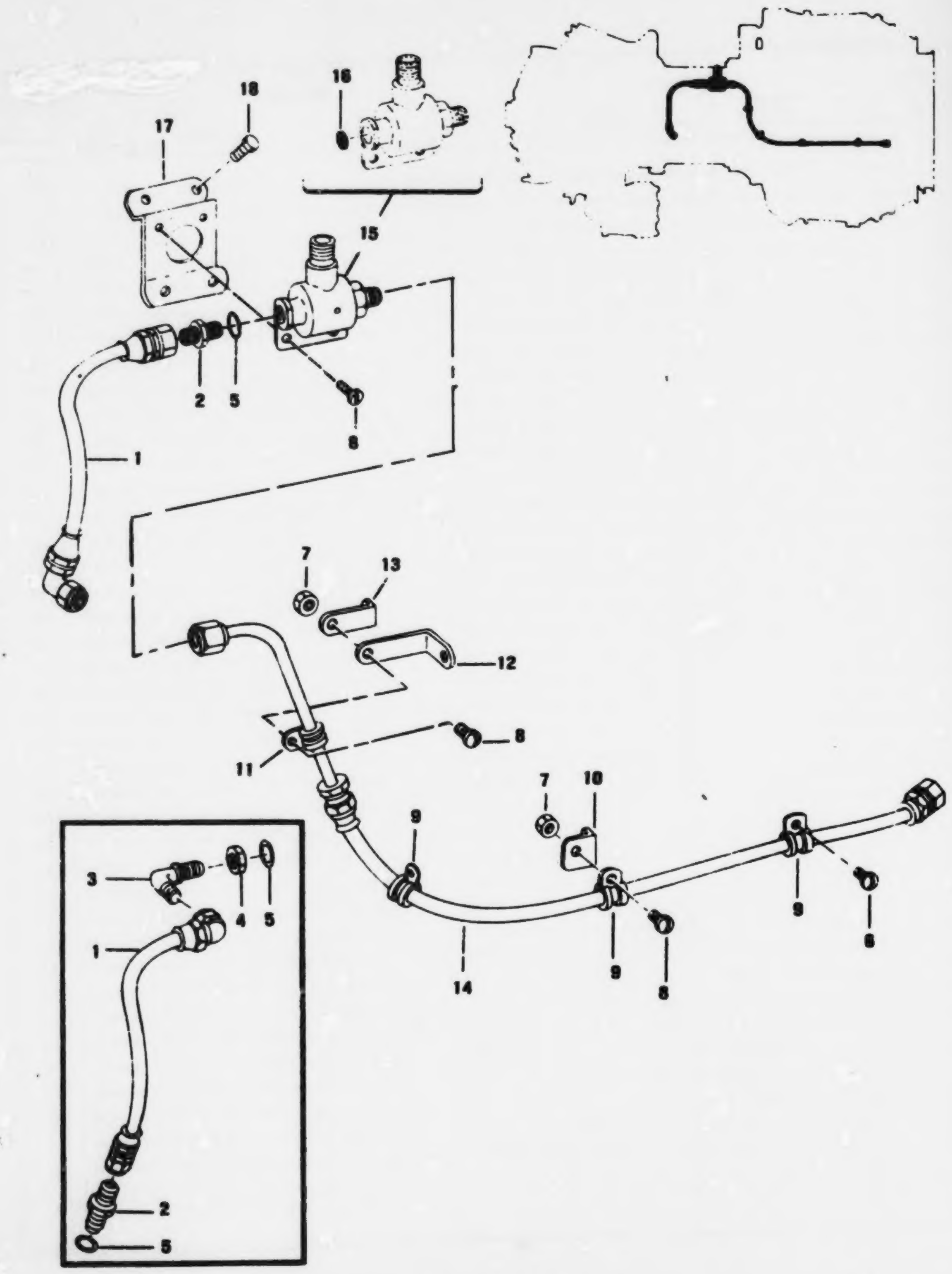

Figure 53. Starting Fuel System (Sheet 1 of 2)

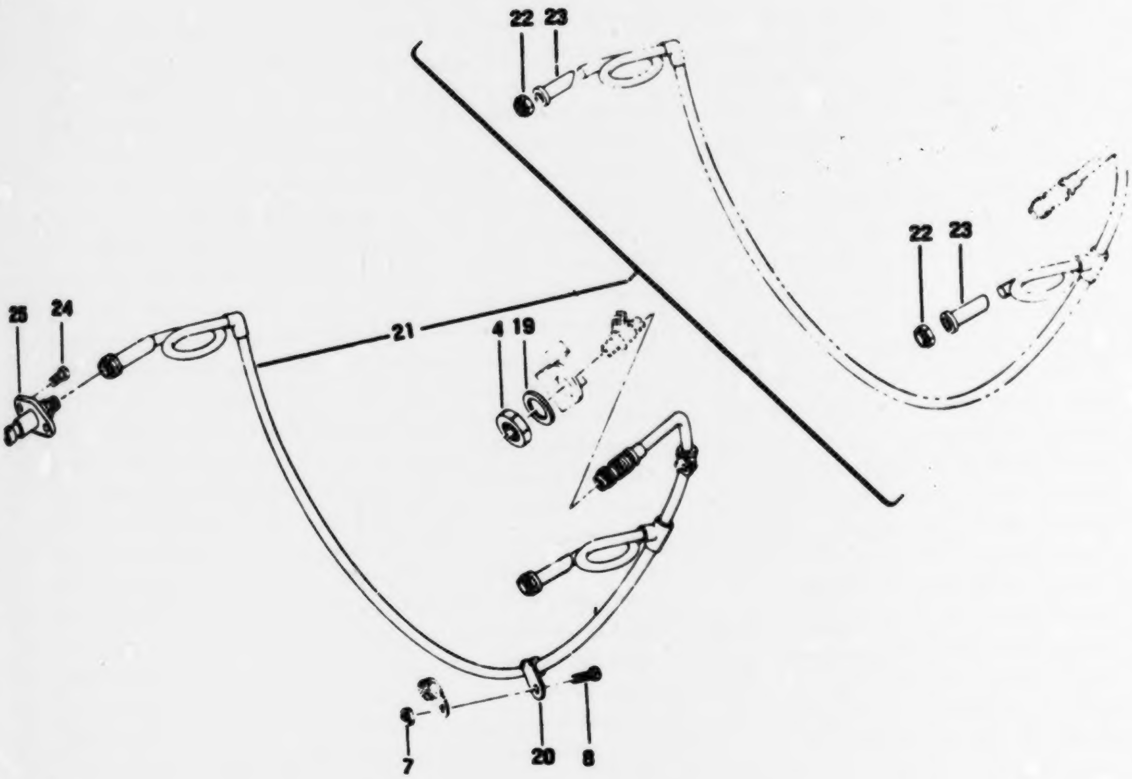

Figure 53. Starting Fuel System (Sheet 2 of 2)

SECTION II

(1) ILLUSTRATION (a) FIG NO.	(1) ILLUSTRATION (b) ITEM NO.	(2) SMR CODE	(3) NATIONAL STOCK NUMBER	(4) FSCM	(5) PART NUMBER	(6) DESCRIPTION USABLE ON CODE	(7) U/M
						GROUP 0404 STARTING FUEL SYSTEM	
						(T53-L-11C,T53-L-11D)	
53	1	PAOZZ	4720-00-856-4356	81547	1-300-244	HOSE ASSEMBLY,NONME..........F76,F77	EA
53	2	PAOZZ	4730-00-834-5560	96906	MS24392D4	NIPPLE,TUBE..........F76,F77	EA
53	3	PAOZZ	4730-00-729-4351	96906	MS24394D4	ELBOW,TUBE..........F76,F77	EA
53	4	PAOZZ	5310-00-282-7823	96906	MS24400D4	NUT,PLAIN,HEXAGON..........F76,F77	EA
53	5	PCOZZ	5330-00-263-8028	96906	MS29512-04	PACKING,PREFORMED..........F76,F77	EA
53	6	PAOZZ	5305-00-512-4817	96906	MS35276-260	SCREW,MACHINE..........F76,F77	EA
53	7	PAOZZ	5310-00-807-1467	96906	MS21042-3	NUT,SELF-LOCKING,EX..........F76,F77	EA
53	8	PAOZZ	5305-00-150-5212	88044	AN502-10-8	SCREW,MACHINE..........F76,F77	EA
53	9	PAOZZ	5340-00-533-3512	81956	EAB700-5	CLAMP,LOOP..........F76,F77	EA
53	10	PAOZZ	2840-00-856-8550	81547	1-160-136-01	BRACKET,CLAMP..........F76,F77	EA
53	11	PAOZZ	5340-00-533-3511	81956	EAB700-4	CLAMP,SUPPORT..........F76,F77	EA
53	12	PAOZZ	5340-00-777-8835	81547	1-160-512-01	BRACKET,ANGLE..........F76,F77	EA
53	13	PAOZZ	5340-00-815-3805	81547	1-160-074-01	BRACKET,ANGLE..........F76,F77	EA
53	14	PAOZZ	4720-00-984-2628	81547	1-300-041	HOSE ASSEMBLY,NONME..........F76,F77	EA
53	15	PAODD	4810-00-087-7652	81547	1-300-191-05	VALVE,SOLENOID,STAR..........F76,F77	EA
53	16	PAOZZ	2915-00-072-4411	58588	7103-78	.STRAINER ELEMENT,SE..........F76,F77	EA
53	17	PAOZZ	2840-00-776-7655	81547	1-160-890-01	BRACKET,PRIMER VALV..........F76,F77	EA
53	18	PAOZZ	5306-00-258-2805	88044	AN103707	BOLT,MACHINE..........F76,F77	EA
53	19	PAOZZ	5310-00-167-0805	88044	AN960C716	WASHER,FLAT..........F76,F77	EA
53	20	PAOZZ	5340-00-533-3510	81956	EAB700-2	CLAMP,LOOP..........F76,F77	EA
53	21	PAODD	2915-00-586-7755	81547	1-170-140-02	MANIFOLD ASSEMBLY..........F76,F77	EA
53	22	PAOZZ	4730-00-540-4363	88044	AN818-2C	.NUT,TUBE COUPLING..........F76,F77	EA
53	23	PAOZZ	2915-00-448-3036	81547	1-160-189-02	.FERRULE,TUBE..........F76,F77	EA
53	24	PAOZZ	5305-00-512-4838	96906	MS35276-263	SCREW,MACHINE..........F76,F77	EA
53	25	PAOFF	2915-00-581-3078	81547	1-300-192-01	NOZZLE ASSEMBLY,STA SEE FIG.54 FOR BREAKDOWN VENDOR PN 13639 FMC 71895..........F76,F77	EA

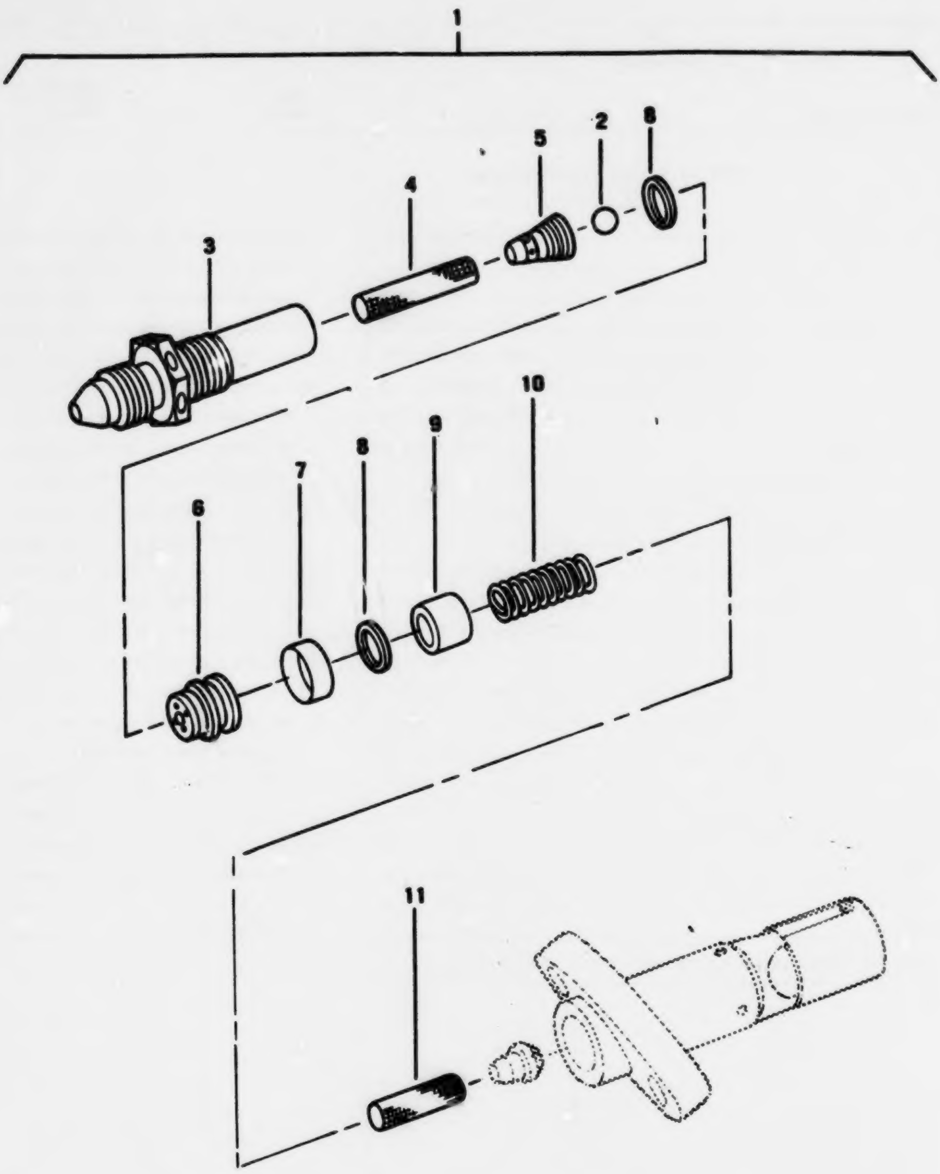

Figure 54. Nozzle Assembly, Starting

(1) ILLUSTRATION (a) FIG NO	(b) ITEM NO	(2) SMR CODE	(3) NATIONAL STOCK NUMBER	(4) FSCM	(5) PART NUMBER	(6) DESCRIPTION USABLE ON CODE	(7) U/M	(8) QTY INC IN UNIT
						GROUP 0406 NOZZLE ASSEMBLY,STARTING (T53-L-11C,T53-L-13B)		
54	1	PADFF	2915-00-561-3078	51547	1-300-192-01	NOZZLE ASSEMBLY,STA SEE FIG.53 FOR NHA VENDOR PN 13635 FNC 71895......F76,F77	EA	2
54	2	PAFZZ	3110-00-183-5175	96906	MS19060-18	.BALL,BEARING......F76,F77	EA	1
54	3	XAFZZ		71855	15542	.RETAINER......F76,F77	EA	1
54	4	PAFZZ	2915-00-830-0125	71855	17123	.STRAINER ELEMENT,SE......F76,F77	EA	1
54	5	PAFZZ	2915-00-562-0087	71855	15535	.GUIDE,FUEL NOZZLE A......F76,F77	EA	1
54	6	PAFZZ	2915-00-562-0058	71855	15544	.SEAT......F76,F77	EA	1
54	7	PAFZZ	2915-00-865-8887	71855	17124	.STRAINER ELEMENT,SE......F76,F77	EA	1
54	8	PAFZZ	5365-00-881-0044	71855	15726	.SHIM......F76,F77	EA	1
54	9	PAFZZ	2915-00-562-0084	71855	13682	.SEAT,SPRING......F76,F77	EA	1
54	10	PAFZZ	5360-00-877-5641	71855	1653	.SPRING,HELICAL,COMP......F76,F77	EA	1
54	11	PAFZZ	2915-00-725-1723	71855	17122	.STRAINER ELEMENT,SE......F76,F77	EA	1

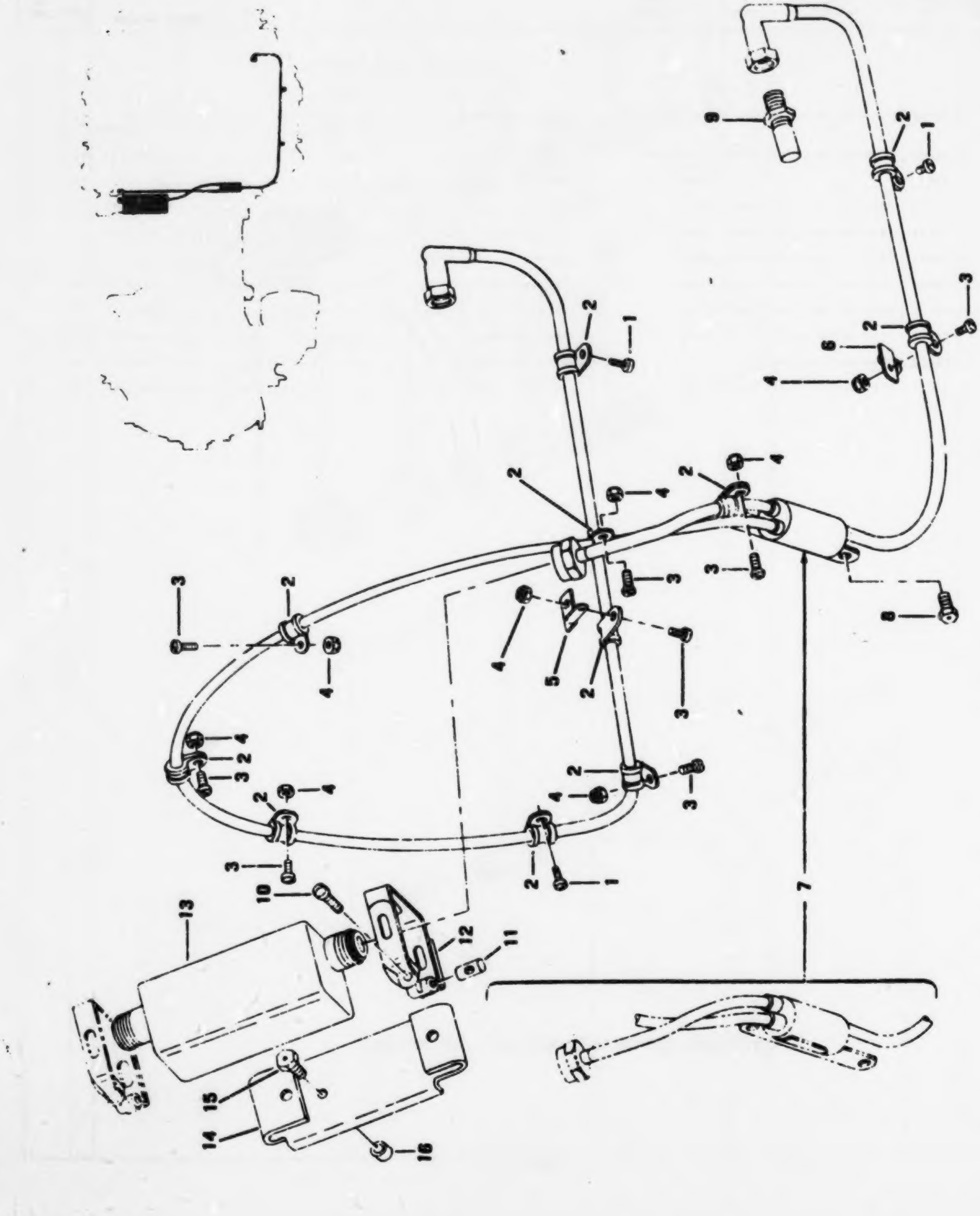

Figure 55. Ignition System

(1) ILLUSTRATION (a) FIG NO.	(1) ILLUSTRATION (b) ITEM NO.	(2) SMR CODE	(3) NATIONAL STOCK NUMBER	(4) FSCM	(5) PART NUMBER	(6) DESCRIPTION USABLE ON CODE	(7) U/M	(8) QTY INC IN UNIT
						GROUP 0407 ELECTRICAL SYSTEM		
						IGNITION SYSTEM (T53-L-11C,T53-L-11D)		
55	1	PAOZZ	5305-00-512-4817	96906	MS35276-260	SCREW,MACHINE....................E76,F77	EA	3
55	2	PAOZZ	5340-00-533-3512	81556	EA87CC-5	CLAMP,LOOP....................E76,F77	EA	11
55	3	PAOZZ	5305-00-150-5212	88044	AN502-10-8	SCREW,MACHINE....................E76,F77	EA	8
55	4	PAOZZ	5310-00-807-1467	96906	MS21042-3	NUT,SELF-LOCKING,EX....................E76,F77	EA	8
55	5	PAOZZ	2840-00-658-8550	51547	1-160-136-01	BRACKET,CLAMP....................E76,F77	EA	1
55	6	PAOZZ	2840-00-658-8549	51547	1-160-135-01	BRACKET,CLAMP....................E76,F77	EA	1
55	7	PAOZZ	2925-00-553-2353	51547	1-300-195-01	COIL AND LEAD SPARK....................E76,F77	EA	1
55	8	PAOZZ	5306-00-258-2809	88044	AN103707	BOLT,MACHINE....................E76,F77	EA	2
55	9	PAOZZ	2925-00-588-7073	51547	1-300-197	IGNITER,SPARK,GAS T....................E76,F77	EA	2
55	10	PAOZZ	5305-00-622-5488	96906	MS35266-68	SCREW,MACHINE....................E76,F77	EA	2
55	11	PAOZZ	5310-00-788-7453	51547	1-160-258-02	NUT,PLAIN,BARREL....................E76,F77	EA	2
55	12	PAOZZ	2840-00-778-7053	51547	1-160-873-02	CLAMP ASSEMBLY,LOOP....................E76,F77	EA	2
55	13	PAOZZ	2925-00-084-5435	51547	1-300-245	EXITER,IGNITION CONTAINS RADIOACTIVE MATERIAL........E76,F77	EA	1
55	14	PAOZZ	2840-00-775-6519	51547	1-160-505-02	BRACKET,IGNITION UN....................E76,F77	EA	1
55	15	PAOZZ	5306-00-282-4133	88044	AN103711	BOLT,MACHINE....................E76,F77	EA	1
55	16	PAOZZ	5365-00-777-5339	51547	1-160-525-01	SPACER,SLEEVE....................E76,F77	EA	1
55		PAOZZ	2925-00-740-6106	77820	10-88584-10	PARTS KIT,COIL AND LEAD U/C 2925-00-553-2353 SEE FUNCTIONAL 50 FOR COMPONENTS E76,F77	EA	1

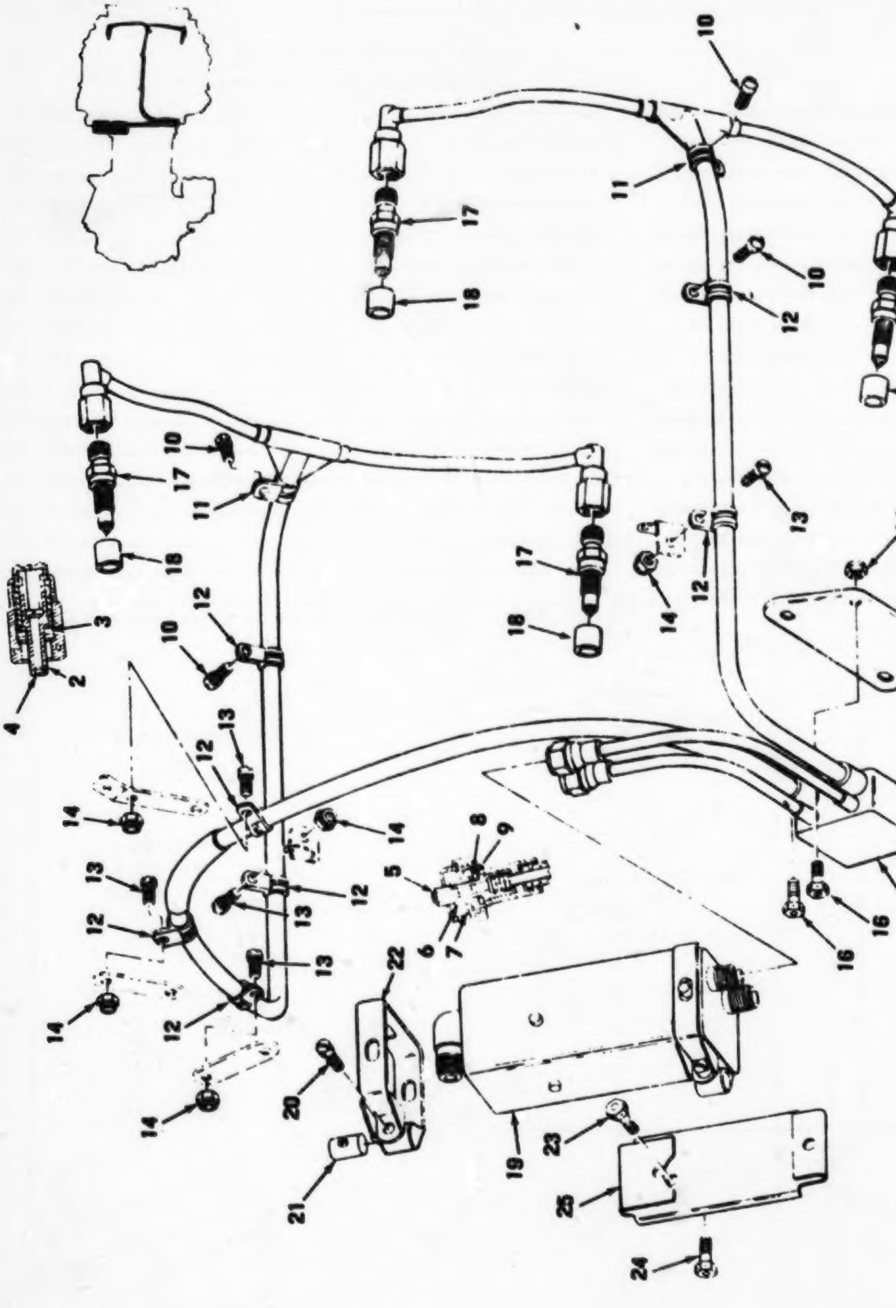

Figure 56. Ignition System

(1) ILLUSTRATION (a) FIG NO	(b) ITEM NO	(2) SMR CODE	(3) NATIONAL STOCK NUMBER	(4) FSCM	(5) PART NUMBER	(6) DESCRIPTION USABLE ON CODE	(7) U/M	(8) QTY INC IN UNIT
						GROUP 0407 IGNITION SYSTEM		
						(T53-L-13B)		
56	1	PAOFF	2840-00-943-2422	51547	1-300-124	CABLE ASSEMBLY,SPEC.....................................F7L	EA	1
56	2	XBFZZ	5970-00-013-8505	77820	10-319253	.INSULATOR,BUSHING......................................F7L	EA	4
56	3	PAFZZ	5365-00-720-5221	77820	10-100079	.RING,RETAINING...F7L	EA	2
56	4	PAFZZ	5340-00-250-5555	77820	10-70557-11	.CAP..F7L	EA	4
56	5	PAFZZ	5365-00-558-1138	96906	MS16633-4012	.RING,RETAINING...F7L	EA	2
56	6	PAFZZ	5330-00-486-8080	77820	10-166711	.PACKING,PREFORMED......................................F7L	EA	2
56	7	PAFZZ	5365-00-475-5441	77820	10-166716	.WASHER,RECESSED..F7L	EA	2
56	8	PAFZZ		77820	10-166724-6	.WASHER,SPRING TENSI....................................F7L	EA	2
56	9	PAFZZ		77820	10-166712	.WASHER,FLAT..F7L	EA	2
56	10	PAOZZ	5305-00-565-6487	96906	MS35266-59	SCREW,MACHINE...F7L	EA	4
56	11	PAOZZ	5340-00-055-2344	51547	1-300-271-07	CLAMP,LOOP..F7L	EA	2
56	12	PAOZZ	5340-00-533-3514	81556	EAP700-7	CLAMP,LOOP..F7L	EA	7
56	13	PAOZZ	5305-00-150-5212	88044	AN502-10-8	SCREW,MACHINE...F7L	EA	8
56	14	PAOZZ	5310-00-807-1467	96906	MS21042-3	NUT,SELF-LOCKING,EX.....................................F7L	EA	4
56	15	PAOZZ	2840-00-557-2352	51547	1-160-622-01	BRACKET,IGNITION MC.....................................F7L	EA	1
56	16	PAOZZ	5306-00-258-2805	88044	AN103707	BOLT,MACHINE..F7L	EA	2
56	17	PAOZZ	2925-00-557-5547	51547	1-300-348	IGNITER,SPARK,GAS T.....................................F7L	EA	4
56	18	PAOZZ	5340-00-528-2008	51547	1-150-126-01	SPACER,SLEEVE...F7L	EA	4
56	19	PAOZZ	2925-00-590-2516	51547	1-300-363	EXCITER,IGNITION CONTAINS RADIOACTIVE MATERIAL.......F7L	EA	1
56	20	PAOZZ	5305-00-622-5486	96906	MS35266-68	SCREW,MACHINE...F7L	EA	2
56	21	PAOZZ	5310-00-788-7453	51547	1-160-258-02	NUT,PLAIN,BARREL..F7L	EA	2
56	22	PAOZZ	2840-00-776-7053	51547	1-160-870-02	CLAMP ASSEMBLY,LOOP.....................................F7L	EA	2
56	23	PAOZZ	5306-00-282-3333	88044	AN103706	BOLT,MACHINE..F7L	EA	1
56	24	PAOZZ	5306-00-133-5558	96906	MS9530-09	BOLT,MACHINE..F7L	EA	1
56	25	PAOZZ	2840-00-557-2385	51547	1-160-509-03	BRACKET,IGNITION UN.....................................F7L	EA	1
56		PAOZZ	2925-00-740-6108	77820	10-86584-10	PARTS KIT,COIL AND LEAD ASSEMBLY SEE FUNCTIONAL GROUP 50 FOR COMPONENTSENTS.........................F7L	EA	2

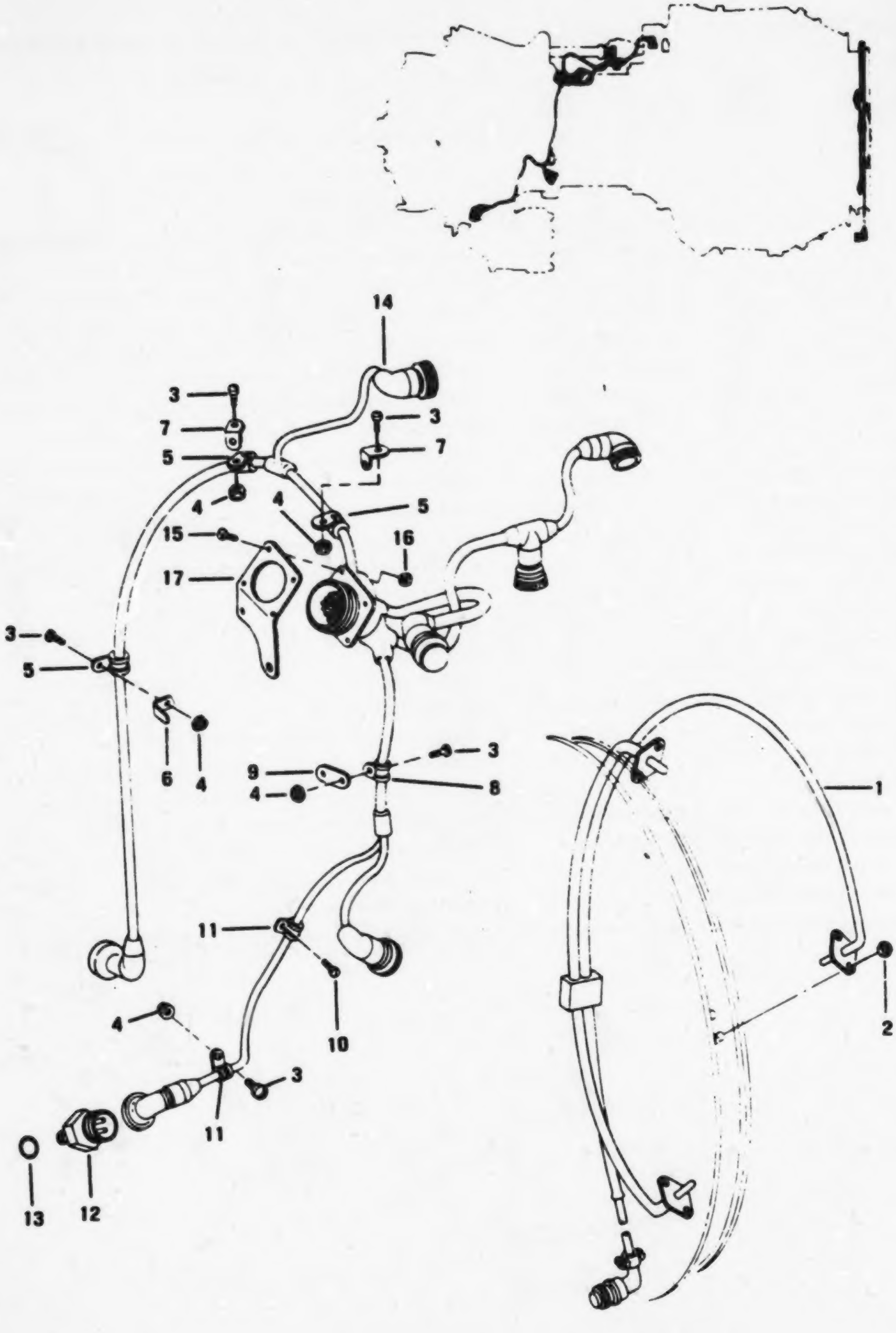

Figure 57. Electrical Cable Assembly and Exhaust Thermocouple

SECTION II

(1) ILLUSTRATION (a) FIG NO.	(b) ITEM NO	(2) SMR CODE	(3) NATIONAL STOCK NUMBER	(4) FSCM	(5) PART NUMBER	(6) DESCRIPTION USABLE ON CODE	(7) U/M	(8) QTY INC IN UNIT
						GROUP 0407 ELECTRICAL CABLE ASSEMBLY AND EXHAUST THERMOCOUPLE (T53-L-11C,T53-L-11D)		
57	1	PAOZZ	6685-00-563-1115	53424	546508765	THERMOCOUPLE AND HA..........F76,F77	EA	1
57	2	PAOZZ	5310-00-258-2747	96906	MS20500-428	NUT,SELF-LOCKING HE..........F76,F77	EA	4
57	3	PAOZZ	5305-00-150-5212	88044	AN502-10-8	SCREW,MACHINE..........F76,F77	EA	8
57	4	PAOZZ	5310-00-807-1467	96906	MS21042-3	NUT,SELF-LOCKING,EX..........F76,F77	EA	8
57	5	PAOZZ	5340-00-523-3511	81556	EA8700-4	CLAMP,SUPPORT..........F76,F77	EA	3
57	6	PAOZZ	5340-00-660-1154	51547	1-160-054-01	BRACKET,ANGLE..........F76,F77	EA	1
57	7	PAOZZ	5340-00-775-6514	51547	1-160-469-01	BRACKET,ANGLE..........F76,F77	EA	2
57	8	PAOZZ	5340-00-533-3512	81556	EA8700-5	CLAMP,LOOP..........F76,F77	EA	1
57	9	PAOZZ	5340-00-565-0213	51547	1-160-312-01	BRACKET,ANGLE..........F76,F77	EA	1
57	10	PAOZZ	5305-00-512-4817	96906	MS35276-260	SCREW,MACHINE..........F76,F77	EA	1
57	11	PAOZZ	5340-00-533-3505	81556	EA8700-3	CLAMP,LOOP..........F76,F77	EA	2
57	12	PAOZZ	6685-00-580-5451	96906	MS28034-3	TRANSMITTER,TEMPERA..........F76,F77	EA	1
57	13	PCOZZ	5330-00-521-2070	80205	NAS617-4	PACKING,PREFORMED..........F76,F77	EA	1
57	14	PAOZZ	2925-00-888-1755	51547	1-330-242	WIRING HARNESS..........F76,F77	EA	1
57	15	PAOZZ	5305-00-286-0214	88044	AN116516	SCREW,MACHINE..........F76,F77	EA	4
57	16	PAOZZ	5310-00-088-0551	96906	MS21044N04	NUT,SELF-LOCKING,HE..........F76,F77	EA	4
57	17	PAOZZ	2925-00-775-6524	51547	1-160-457-02	BRACKET,ANGLE,ELECT..........F76,F77	EA	1

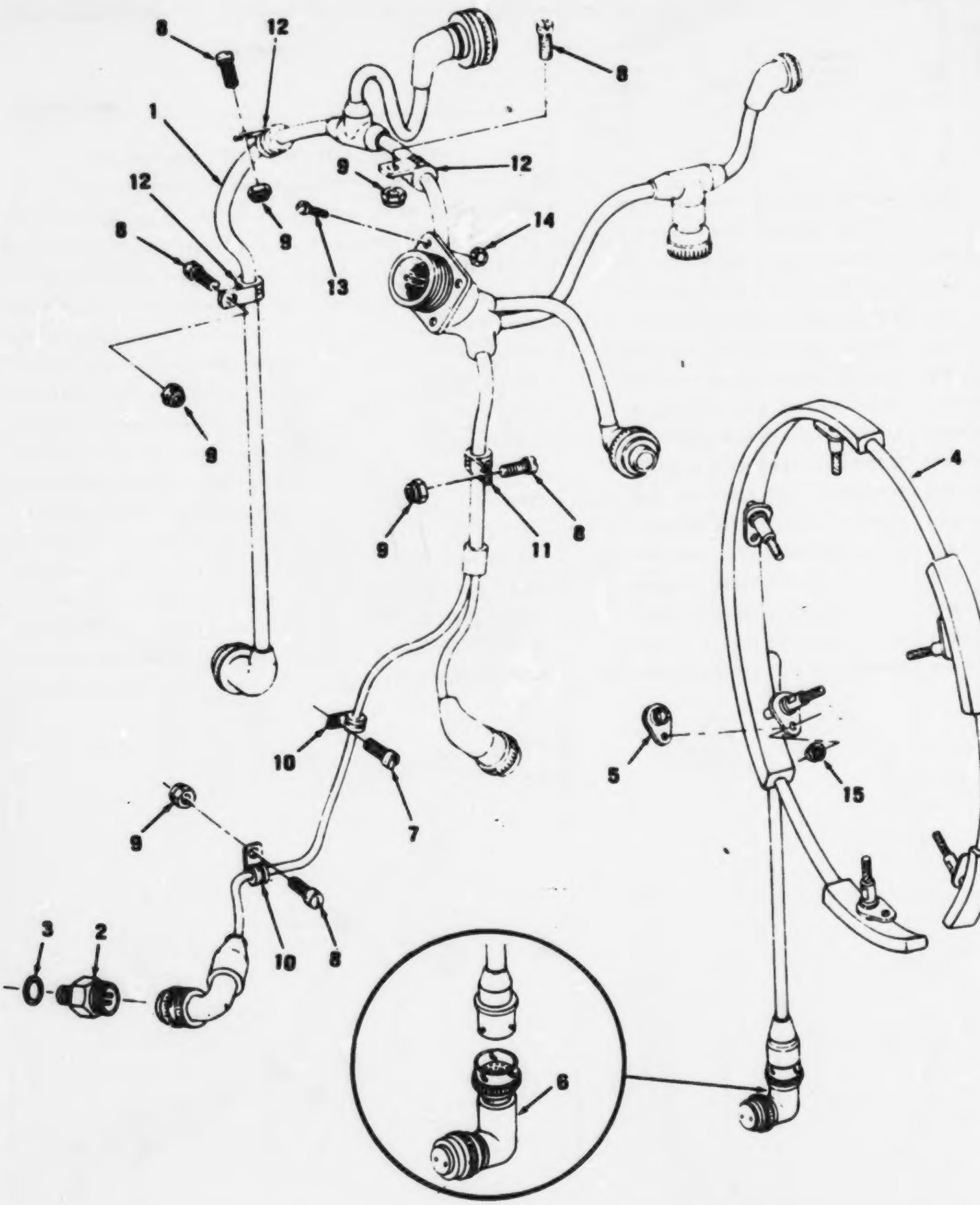

Figure 58. Electrical Cable Assembly and Exhaust Thermocouple

(1) ILLUSTRATION (a) FIG NO	(1) ILLUSTRATION (b) ITEM NO	(2) SMR CODE	(3) NATIONAL STOCK NUMBER	(4) FSCM	(5) PART NUMBER	(6) DESCRIPTION USABLE ON CODE	(7) U/M	(8) QTY INC IN UNIT
						GROUP 0407 ELECTRICAL CABLE ASSEMBLY AND EXHAUST THERMOCOUPLE (T53-L-13B)		
5F	1	PAOZZ	2925-00-888-1355	51547	1-300-242	WIRING HARNESS....................................F71	EA	1
5F	2	PAOZZ	6685-00-580-5651	96906	MS28034-3	TRANSMITTER,TEMPERA...............................F71	EA	1
5F	3	PCOZZ	5330-00-531-2070	80205	NAS617-4	PACKING,PREFORMED.................................F71	EA	1
5F	4	PAOZZ	6685-00-762-0636	51547	1-300-177	HARNESS,THERMOCOUPL...............................F71	EA	1
5F	5	PAOZZ	6685-00-528-4083	51547	1-150-077-03	ADAPTER,THERMOCOUPL...............................F71	EA	6
5F	6	PAOZZ	5935-00-108-0056	51547	1-300-178	ADAPTER,CONNECTOR.................................F71	EA	1
5F	7	PAOZZ	5305-00-150-5213	88044	AN502-10-6	SCREW,MACHINE.....................................F71	EA	1
5F	8	PAOZZ	5305-00-150-5212	88044	AN502-10-8	SCREW,MACHINE.....................................F71	EA	6
5F	9	PAOZZ	5310-00-807-1467	96906	MS21042-3	NUT,SELF-LOCKING,EX...............................F71	EA	6
5F	10	PAOZZ	5340-00-533-3505	81556	EAB700-3	CLAMP,LOOP..F71	EA	2
5F	11	PAOZZ	5340-00-533-3512	81556	EAB700-5	CLAMP,LOOP..F71	EA	1
5F	12	PAOZZ	5340-00-533-3511	81556	EAB700-4	CLAMP,SUPPORT.....................................F71	EA	3
5F	13	PAOZZ	5305-00-288-0214	88044	AN116516	SCREW,MACHINE.....................................F71	EA	4
5F	14	PAOZZ	5310-00-088-0551	96906	MS21044N34	NUT,SELF-LOCKING,HE...............................F71	EA	4
5F	15	PAOZZ	5310-00-844-4872	96906	MS21043-4	NUT,SELF-LOCKING,EX...............................F71	EA	4

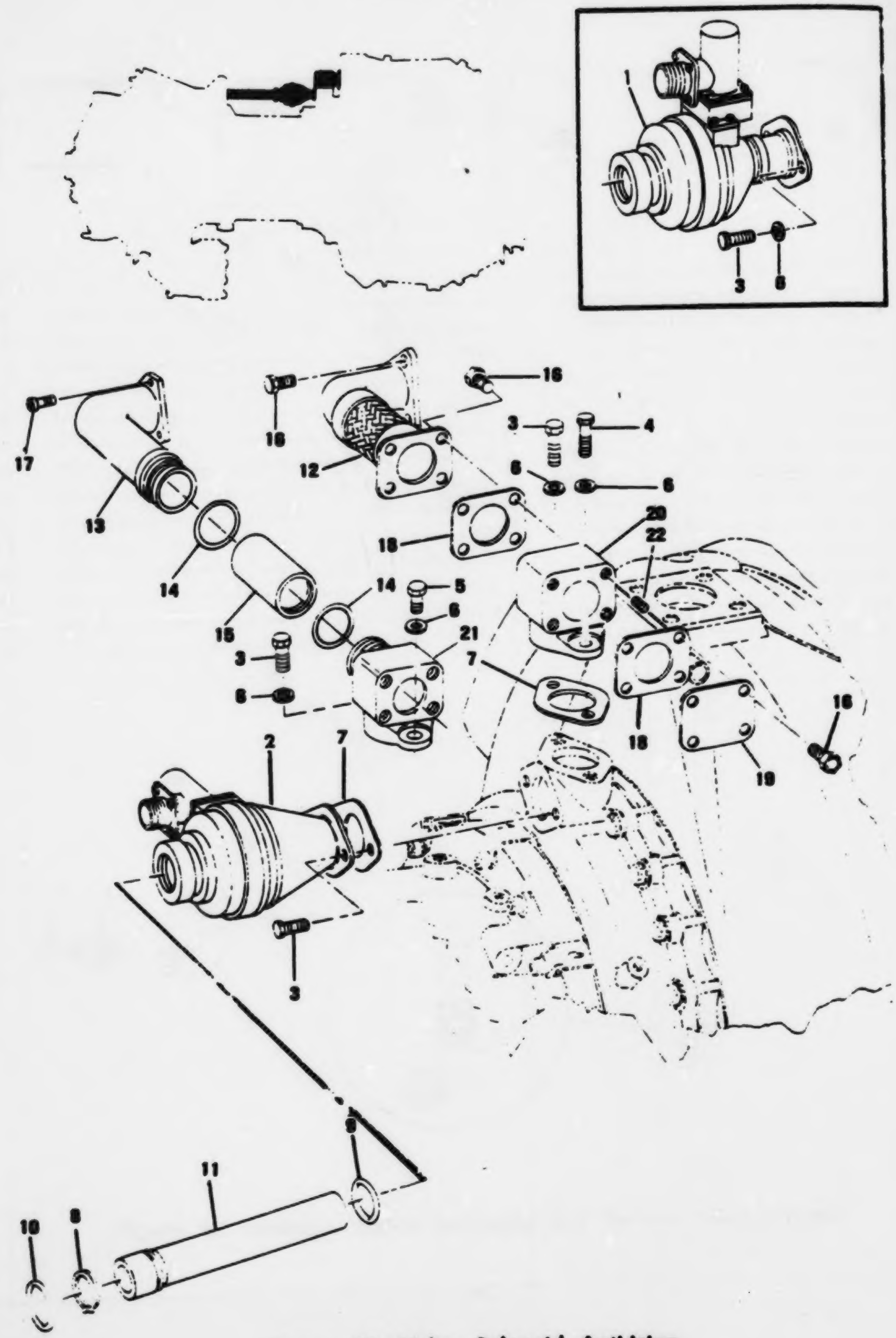

Figure 59. Valve Solenoid, Anti-Icing

SECTION II

(1) ILLUSTRATION (a) FIG NO.	(b) ITEM NO.	(2) SMR CODE	(3) NATIONAL STOCK NUMBER	(4) FSCM	(5) PART NUMBER	(6) DESCRIPTION USABLE ON CODE	(7) U/M	(8) QTY INC IN UNIT
						GROUP 0407 VALVE SOLENOID,ANTI-ICING		
59	1	PAOOD	4810-00-081-5870	51547	1-300-194	VALVE,SOLENOID	EA	1
59	1	PAOOD	4810-00-088-6312	55643	2804C	VALVE,SOLENOID SEE FIG.61 FOR BREAKDOWN	EA	1
59	2	PAODD	4810-00-906-2326	99167	26330053	VALVE,SOLENOID SEE FIG.60 FOR BREAKDOWN	EA	1
59	3	PAOZZ	5306-00-182-2016	88044	AN4H5A	.BOLT,MACHINE	EA	4
59	3	PAOZZ	5305-00-271-2007	88044	AN148659	.SCREW,CAP,HEXAGON H U/C PN 1-170-710-02 F21	EA	2
59	4	PAOZZ	5306-00-180-3384	88044	AN133809	.BOLT,MACHINE F26,F27	EA	1
59	5	PAOZZ	5306-00-177-5558	96906	MS9530-09	.BOLT,MACHINE F21	EA	1
59	6	PAOZZ	5310-00-167-0835	88044	AN960-416L	.WASHER,FLAT	EA	4
59	7	PAOZZ	5330-00-088-0007	51547	1-160-047-02	.GASKET	EA	2
59	8	PAOZZ	5365-00-803-7320	96906	MS16624-1106	.RING,RETAINING	EA	1
59	9	PAOZZ	5330-00-618-0490	51547	STD300C819	.PACKING,PREFORMED	EA	1
59	10	PAOZZ	5330-00-778-7056	51547	STD300C820	.PACKING,PREFORMED	EA	1
59	11	PAOZZ	2840-00-775-6516	51547	1-100-334-05	.TUBE,AIR REGULATOR,	EA	1
59	12	PAOZZ	2840-00-554-4303	51547	1-170-130-01	.MANIFOLD,AIR BLEED F26,F27	EA	1
59	13	PAOZZ	4730-00-510-3088	51547	1-160-033-01	.ELBOW,AIR BLEED F21	EA	1
59	14	PAOZZ	5330-00-110-8521	51547	1-300-182	.PACKING,PREFORMED F21	EA	2
59	15	PAOZZ	2840-00-525-3021	51547	1-160-619-01	.TUBE,CROSSOVER AIR F21	EA	1
59	16	PAOZZ	5306-00-281-5542	88044	AN137406	.BOLT,MACHINE	EA	11
59	17	PAOZZ	5306-00-825-4603	96906	MS9085-06	.BOLT,EXTERNALLY BODY F21	EA	2
59	18	PAOZZ	5330-00-584-7138	51547	1-160-295-02	.GASKET	EA	1
59	19	PAOZZ	2840-00-586-5423	51547	1-160-304-01	.COVER,PORT,BLEED AI	EA	1
59	20	PAOZZ	2915-00-576-5308	51547	1-170-210-01	.ADAPTER ASSEMBLY,BL F26,F27	EA	1
59	21	PAOZZ	2840-00-525-3255	51547	1-170-220-01	.ADAPTER ASSEMBLY,AI F21	EA	1
59	21	PAOZZ	2840-01-008-5553	51547	1-170-710-02	.ADAPTER ASSEMBLY,AI U/W IMPELLER PN 1-101-370-02 F21	EA	1
59		PAOZZ	5306-00-255-1054	96906	MS9530-13	..BOLT,MACHINE U/C PN 1-170-710-02 F21	EA	2
59	22	PAOZZ	5340-00-291-3484	96906	MS21208F4-15	.INSERT,SCREW THREAD	EA	4

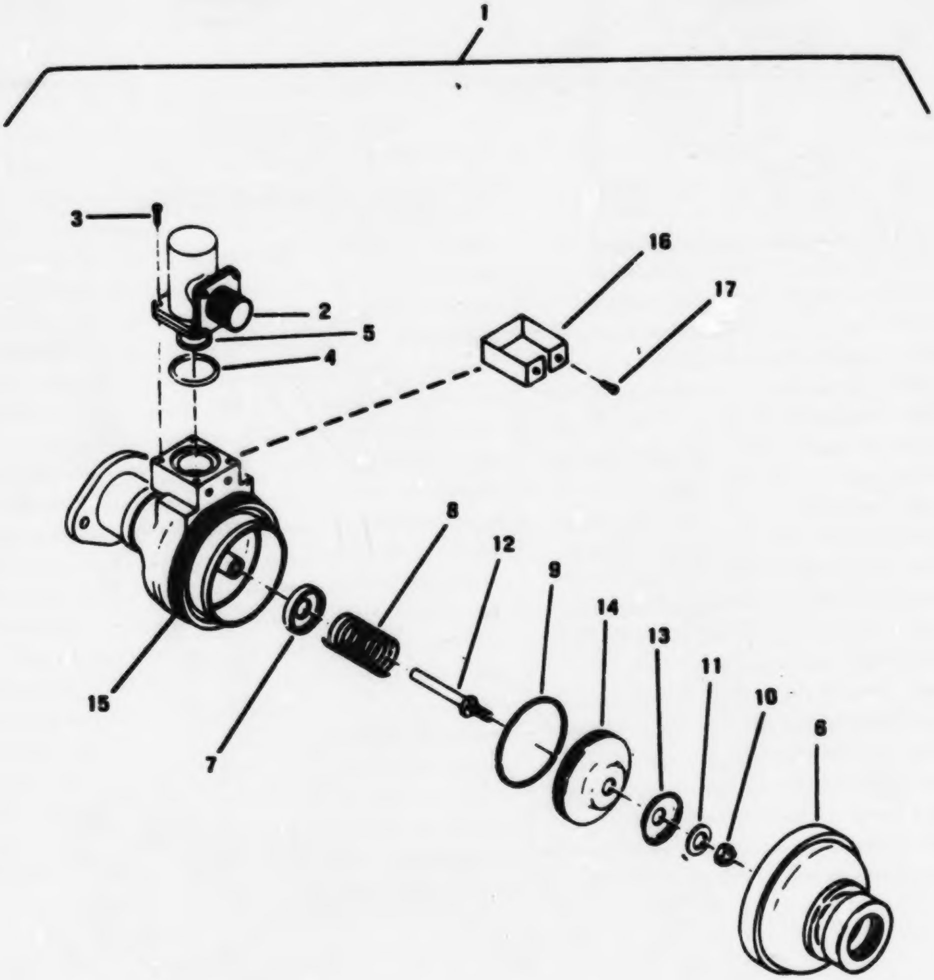

Figure 60. Valve Assembly, Hot Air

SECTION II

(1) ILLUSTRATION (a) FIG NO	(b) ITEM NO	(2) SMR CODE	(3) NATIONAL STOCK NUMBER	(4) FSCM	(5) PART NUMBER	(6) DESCRIPTION USABLE ON CODE	(7) U/M	(8) QTY INC IN UNIT
						GROUP 0407 VALVE ASSEMBLY,HOT AIR		
60	1	PAOOO	4810-00-908-2326	55167	26330053	VALVE,SOLENOID SEE FIG.55 FOR NHA	EA	1
60	2	PAOZZ	5945-00-855-9478	55167	25820153	.SOLENOID,ELECTRICAL	EA	1
60	3	PAOZZ	5305-00-941-9427	96906	MS35275-215	.SCREW,MACHINE	EA	4
60	4	PAOZZ	5330-00-855-9437	55167	25716068	.PACKING,PREFORMED	EA	1
60	5	PAOZZ	5330-00-855-9332	55167	25626545-01	.PACKING,PREFORMED	EA	1
60	6	PAOZZ	2995-00-908-9310	55167	26326083	.FITTING AND CONNECT	EA	1
60	7	PAOZZ	5310-00-975-9417	55167	25816978	.WASHER,RECESSED	EA	1
60	8	PAOZZ	5360-00-858-0001	55167	25816572	.SPRING,COMPRESSION	EA	1
60	9	PAOZZ	2840-00-990-3221	55167	25916207	.RING,PISTON	EA	2
60	10	PAOZZ	5310-00-095-9265	96906	MS21046C4	.NUT,SELF-LOCKING	EA	1
60	11	PAOZZ	5365-00-858-9421	55167	25716061	.SPACER,PLATE	EA	1
60	12	PAOZZ	2840-00-823-9952	55167	25816570	.SHAFT	EA	1
60	13	PAOZZ	2840-00-802-2718	55167	25816571	.DISC,VALVE	EA	1
60	14	PAOZZ	2840-00-802-2722	55167	25926062	.PISTON	EA	1
60	15	PAOZZ	2995-00-908-9311	55167	26336135	.BODY,VALVE,ANTI-ICI	EA	1
60	16	PAOZZ	2995-00-908-9313	55167	26326084	.PLATE,VALVE IDENTIF	EA	1
60	17	PAOZZ	5305-00-052-8874	96906	MS24630-1	.SCREW,TAPPING,THREA	EA	2

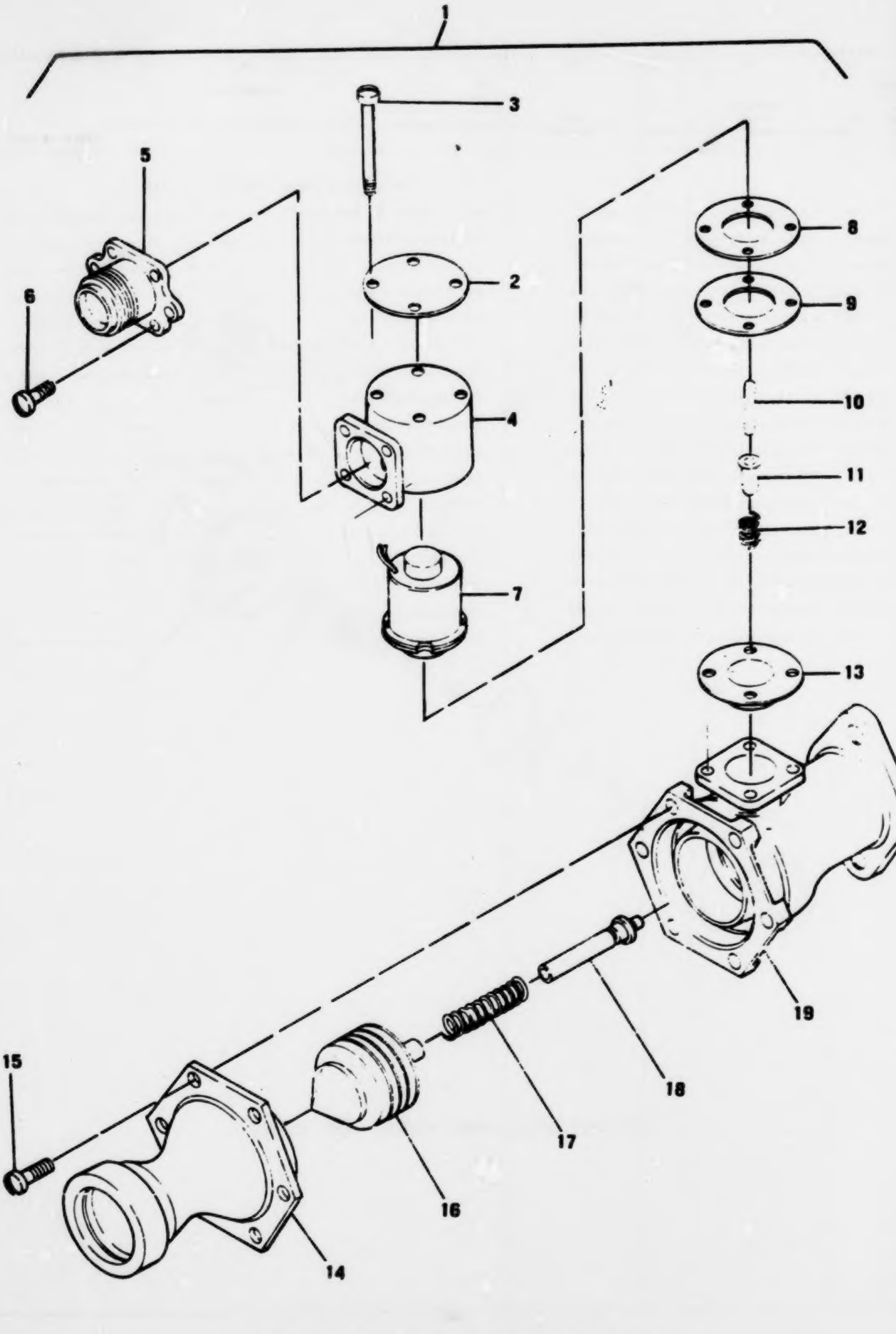

Figure 61. Valve Solenoid, Anti-Icing

(1) ILLUSTRATION (a) FIG NO.	(b) ITEM NO.	(2) SMR CODE	(3) NATIONAL STOCK NUMBER	(4) FSCM	(5) PART NUMBER	(6) DESCRIPTION USABLE ON CODE	(7) U/M	(8) QTY INC IN UNIT
						GROUP C407 VALVE SOLENOID,ANTI-ICING		
61	1	PAODD	4810-00-088-6312	55643	28040	VALVE,SOLENOID SEE FIG.55 FOR NHA...........................	EA	1
61	2	PBDZZ	5905-00-052-4352	55643	15775	.PLATE,IDENTIFICATIO..	EA	1
61	3	PAOZZ	5305-00-045-1461	55643	15776	.SCREW,SPECIAL..	EA	4
61	4	PBDZZ	4810-00-111-3014	55643	15769	.HOUSING,SOLENOID...	EA	1
61	5	PBDZZ	4810-00-156-8411	55643	15865	.CONNECTOR,VALVE..	EA	1
61	6	PAOZZ	5305-00-941-3551	96906	MS35275-213	.SCREW,MACHINE..	EA	4
61	7	PAOZZ	4810-00-111-3020	55643	15765	.SOLENOID AND SHUTOF..	EA	1
61	8	PBDZZ	4810-00-111-3015	55643	15817	.INSULATOR PLATE,SHU..	EA	1
61	9	PBDZZ	4810-00-111-3012	55643	15818	.INSULATOR,SHUTOFF V..	EA	1
61	10	XADZZ		55643	15768	.PIN,SHOULDER,HEADLE..	EA	1
61	11	PBDZZ	4810-00-111-3013	55643	15771	.POPPET,SHUTOFF VALV..	EA	1
61	12	PBDZZ	5360-00-113-0518	55643	15772	.SPRING,HELICAL,COMP..	EA	1
61	13	PAOZZ	4810-00-111-5356	55643	20404	.RETAINER,SHUTOFF VA..	EA	1
61	14	PBDZZ	4810-00-052-4355	55643	15758	.HOUSING,VALVE,END..	EA	1
61	15	PAOZZ	5305-00-935-5230	96906	MS35275-243	.SCREW,MACHINE..	EA	4
61	16	PBDZZ	4810-00-052-4356	55643	15759	.PISTON,SHUTOFF VALV..	EA	1
61	17	PBDZZ	5360-00-052-4358	55643	15763	.SPRING,HELICAL,COMP..	EA	1
61	18	PBDZZ	1660-00-875-2154	55643	1478	.GUIDE,VALVE,HOT AIR..	EA	1
61	19	PBDZZ	4810-00-052-4354	55643	15511	.BODY,SHUTOFF VALVE...	EA	1

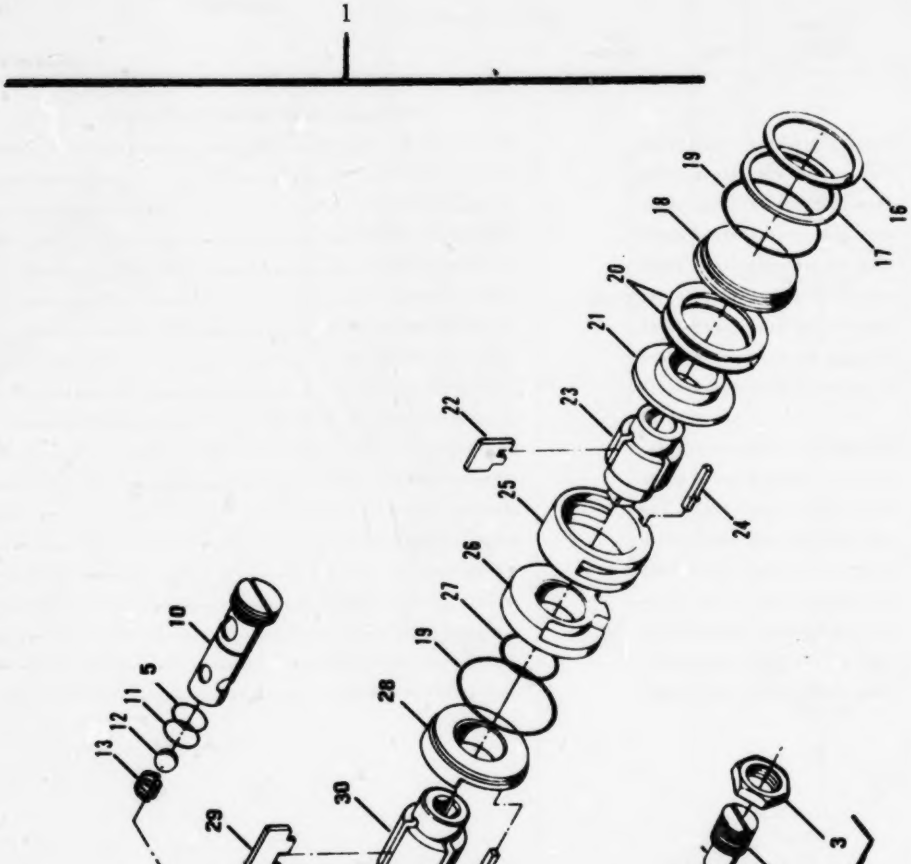

Figure 62. Pump, Rotary

(1) ILLUSTRATION (a) FIG NO	(b) ITEM NO	(2) SMR CODE	(3) NATIONAL STOCK NUMBER	(4) FSCM	(5) PART NUMBER	(6) DESCRIPTION USABLE ON CODE	(7) U/M	(8) QTY INC IN UNIT
						GROUP 0408 OIL SYSTEM		
						PUMP,ROTARY		
62	1	PAOFD	4320-00-977-7468	81547	1-300-212	PUMP,ROTARY SEE FIG.27 FOR NHA	EA	1
62	2	PADZZ	4820-00-065-5502	51663	RB17365	.VALVE,RELIEF,PRESSU	EA	1
62	3	XADZZ		51663	RA16228	..NUT,PLAIN,HEXAGON	EA	1
62	4	XADZZ		51663	RB16227	..SCREW,ADJUSTING,VAL	EA	1
62	5	XADZZ		96906	MS29561-015	..PACKING,PREFORMED	EA	2
62	6	XADZZ		51663	RA16223-3	..SPRING,HELICAL,COMP	EA	1
62	7	XADZZ		51663	RA16224	..VALVE,RELIEF PUMP	EA	1
62	8	XADZZ		51663	RA16219	..SPACER,RING	EA	1
62	9	XADZZ		51663	RD17366	..VALVE HOUSING	EA	1
62	10	PADZZ	4320-00-065-5505	51663	RD17355	.HOUSING,CHECK VALVE	EA	1
62	11	PCDZZ	5330-00-725-5254	96906	MS29561-014	.PACKING,PREFORME	EA	1
62	12	PADZZ	3110-00-558-7325	96906	MS19060-27	.BALL,BEARING	EA	1
62	13	PADZZ	5360-00-903-8815	51663	RA17361	.SPRING,HELICAL,COMP	EA	1
62	14	PADZZ	5305-00-888-7248	51663	RA17157-1	.SETSCREW	EA	2
62	15	PADZZ	5310-00-184-8966	88044	AN960PD8	.WASHER,FLAT	EA	2
62	16	PADZZ		80756	RR181	.RING,RETAINING	EA	1
62	17	PADZZ	5340-00-902-8533	51663	RB17363-1	.SHIM	EA	1
62	17	PADZZ	5365-00-902-8534	51663	RB17363-2	.SPACER,RING	EA	1
62	17	PADZZ	5365-00-902-9401	51663	RB17363-3	.SPACER,RING	EA	1
62	17	PADZZ	5365-00-902-9402	51663	RB17363-4	.SPACER,RING	EA	1
62	18	PADZZ	4320-00-065-5501	51663	RB17354	.COVER,ACCESS	EA	1
62	19	PCDZZ	5330-00-901-9091	51663	MS26110-030040	.PACKING,PREFORME	EA	2
62	20	XBDZZ	5310-00-901-4554	51663	MS26038-3	.WASHER,SPRING TENSI	EA	2
62	21	PADZZ	3120-00-065-5536	51663	RB17362	.BEARING,SLEEVE	EA	1
62	22	PADZZ	4320-00-178-4119	51663	MS26149-58	.BLADE,PUMP	EA	4
62	23	PADZZ	4320-00-065-5504	51663	RC17353	.ROTOR,PUMP	EA	1
62	24	PADZZ	5315-00-765-2853	51663	RA17156-1	.KEY,MACHINE	EA	1
62	25	PADZZ	4320-00-982-0088	51663	MS26005-58	.LINER,PUMP	EA	1
62	26	PADZZ	3120-00-065-5534	51663	RB17357	.BEARING,SLEEVE	EA	1
62	27	PADZZ	5330-00-918-0682	51663	RA17359	.PACKING,PREFORMED	EA	1
62	28	PADZZ	3120-00-065-5533	51663	RB17356	.BEARING,SLEEVE	EA	1
62	29	PADZZ	4320-00-178-4132	51663	MS26149-94	.BLADE,PUMP	EA	4
62	30	PADZZ	4320-00-065-5503	51663	RC17352	.ROTOR,PUMP	EA	1
62	31	PADZZ	5315-00-764-8229	51663	RA17156-2	.KEY,MACHINE	EA	1
62	32	PADZZ	4320-00-065-5506	51663	MS26005-94	.LINER,PUMP	EA	1
62	33	PADZZ	3120-00-065-5535	51663	RB17358	.BEARING,SLEEVE	EA	1
62	34	PADZZ	9905-00-982-0082	51663	RA8183	.PLATE,IDENTIFICATIO	EA	1
62	35	PADZZ	5305-00-253-5403	96906	MS21318-1	.SCREW,DRIVE	EA	4
62	36	PADZZ	4320-00-065-5507	51663	RR17351	.HOUSING,OIL PUMP	EA	1

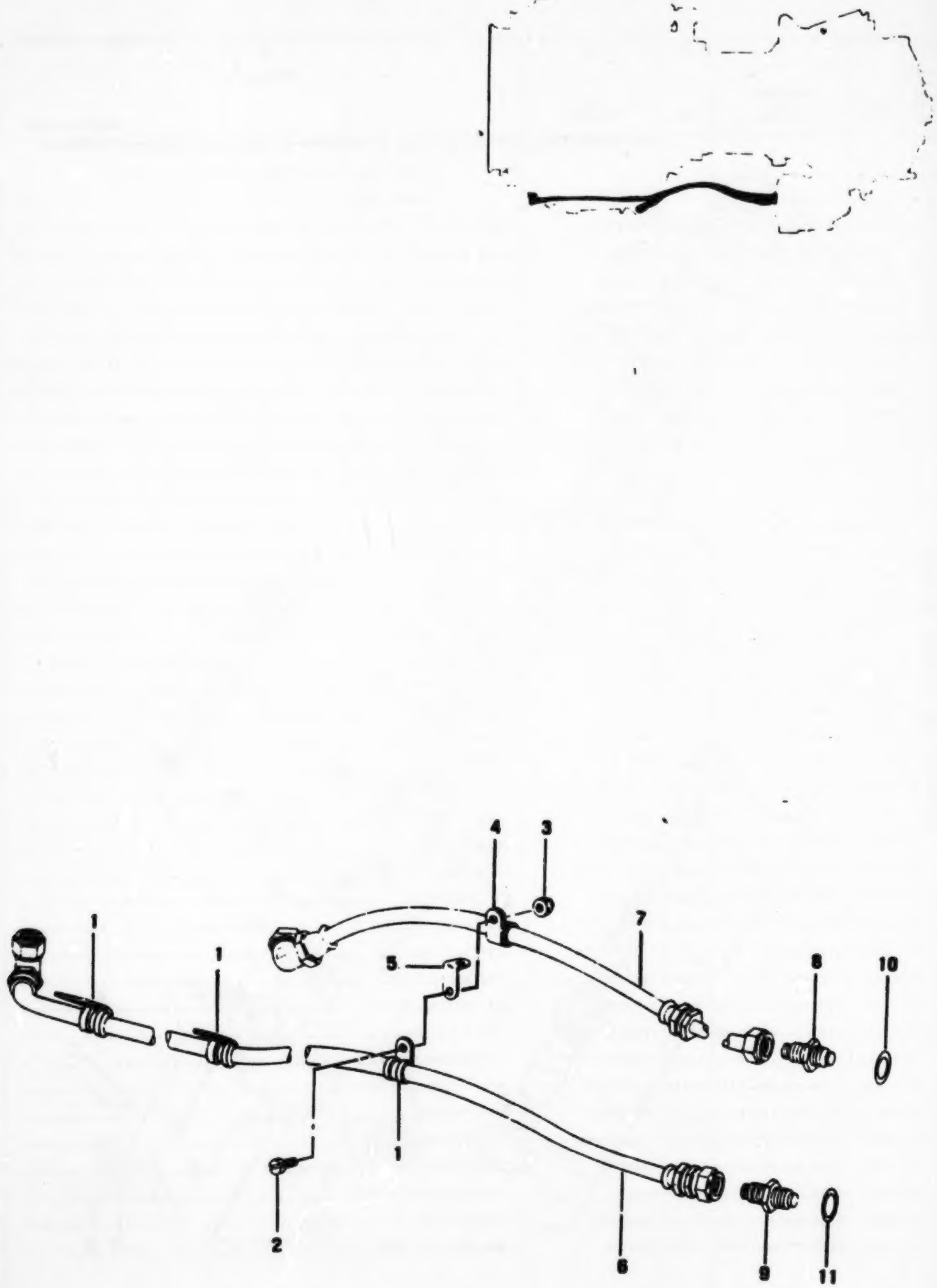

Figure 63. External Oil Lines (Sheet 1 of 2)

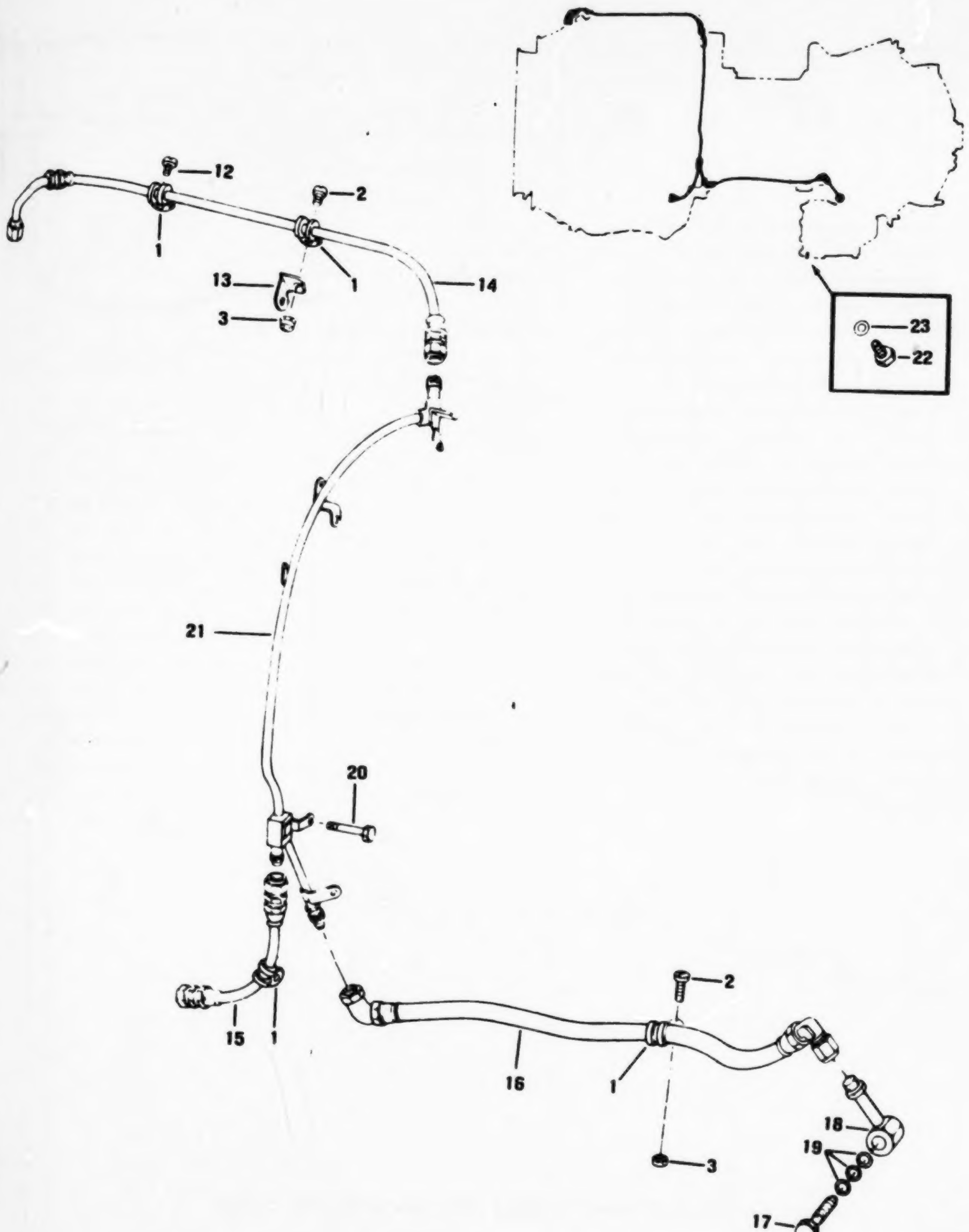

Figure 63. External Oil Lines (Sheet 2 of 2)

SECTION II

(1) ILLUSTRATION		(2)	(3)	(4)	(5)	(6)	(7)	(8)
(a) FIG NO	(b) ITEM NO	SMR CODE	NATIONAL STOCK NUMBER	FSCM	PART NUMBER	DESCRIPTION — USABLE ON CODE	U/M	QTY INC IN UNIT
						GROUP 0408 EXTERNAL OIL LINES (T53-L-11C,T53-L-11D)		
63	1	PAOZZ	5340-00-533-3512	81996	FAB700-5	CLAMP,LOOP....................F76,F77	EA	10
63	2	PAOZZ	5305-00-150-9212	88044	AN502-10-8	SCREW,MACHINE....................F76,F77	EA	6
63	3	PAOZZ	5310-00-807-1467	96906	MS21042-3	NUT,SELF-LOCKING,EX....................F76,F77	EA	6
63	4	PAOZZ	5340-00-533-3514	81996	FAB700-7	CLAMP,LOOP....................F76,F77	EA	1
63	5	PAOZZ	5340-00-775-6514	91547	1-160-468-01	BRACKET,ANGLE....................F76,F77	EA	1
63	6	PAOZZ	4720-00-856-4794	91547	1-300-229	HOSE ASSEMBLY,NONME....................F76,F77	EA	1
63	7	PAOZZ	4720-00-088-6192	91547	1-300-227	HOSE ASSEMBLY,NONME....................F76,F77	EA	1
63	8	PAOZZ	4730-00-684-6916	96906	MS24392D6	NIPPLE,TUBE....................F76,F77	EA	2
63	9	PCOZZ	5330-00-531-2070	80205	NAS617-4	PACKING,PREFORMED....................F76,F77	EA	1
63	10	PAOZZ	5330-00-811-1445	80205	NAS1595-6	PACKING,PREFORMED....................F76,F77	EA	2
63	11	PAOZZ	4730-00-834-9980	96906	MS24392D4	NIPPLE,TUBE....................F76,F77	EA	1
63	12	PAOZZ	5305-00-912-4817	96906	MS35276-260	SCREW,MACHINE....................F76,F77	EA	1
63	13	PAOZZ	2840-00-656-8549	91547	1-160-135-01	BRACKET,CLAMP....................F76,F77	EA	1
63	14	PAOZZ	4720-00-781-1982	78570	54537	HOSE ASSEMBLY,NONME....................F76,F77	EA	
63	15	PAOZZ	4720-00-988-9991	91547	1-300-054	HOSE ASSEMBLY,NONME....................F76,F77	EA	1
63	16	PAOZZ	4720-00-199-9789	91547	1-300-225	HOSE ASSEMBLY,NONME....................F76,F77	EA	1
63	17	PAOZZ	2840-00-775-6512	91547	1-160-469-01	CONNECTOR,OIL LINE....................F76,F77	EA	1
63	18	PAOZZ	2840-00-776-7086	91547	1-160-560-01	ADAPTER ASSEMBLY,OI....................F76,F77	EA	1
63	19	PCOZZ	5330-00-984-0190	80205	NAS617-5	PACKING,PREFORME....................F76,F77	EA	1
63	20	PAOZZ	5306-00-269-6986	88044	AN103813	BOLT,MACHINE....................F76,F77	EA	1
63	21	PAOZZ	2840-00-776-1979	91547	1-160-660-02	MANIFOLD ASSEMBLY,L....................F76,F77	EA	1
63	22	PAOZZ	5365-00-969-1158	96906	MS9404-04	PLUG,MACHINE THREAD....................F76,F77	EA	1
63	23	PCOZZ	5330-00-531-2070	80205	NAS617-4	PACKING,PREFORMED....................F76,F77	EA	1

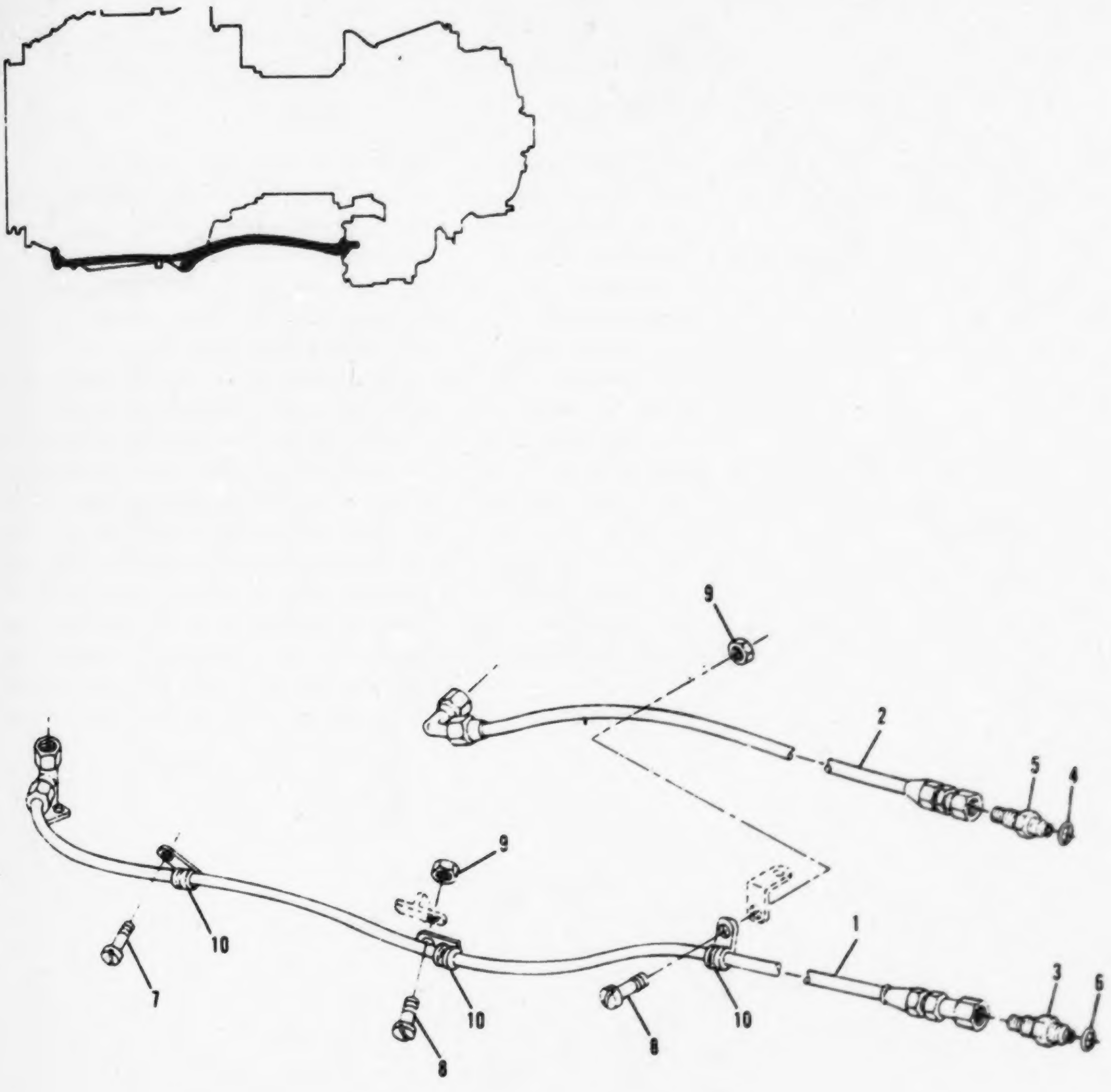

Figure 64. External Oil Lines (Sheet 1 of 2)

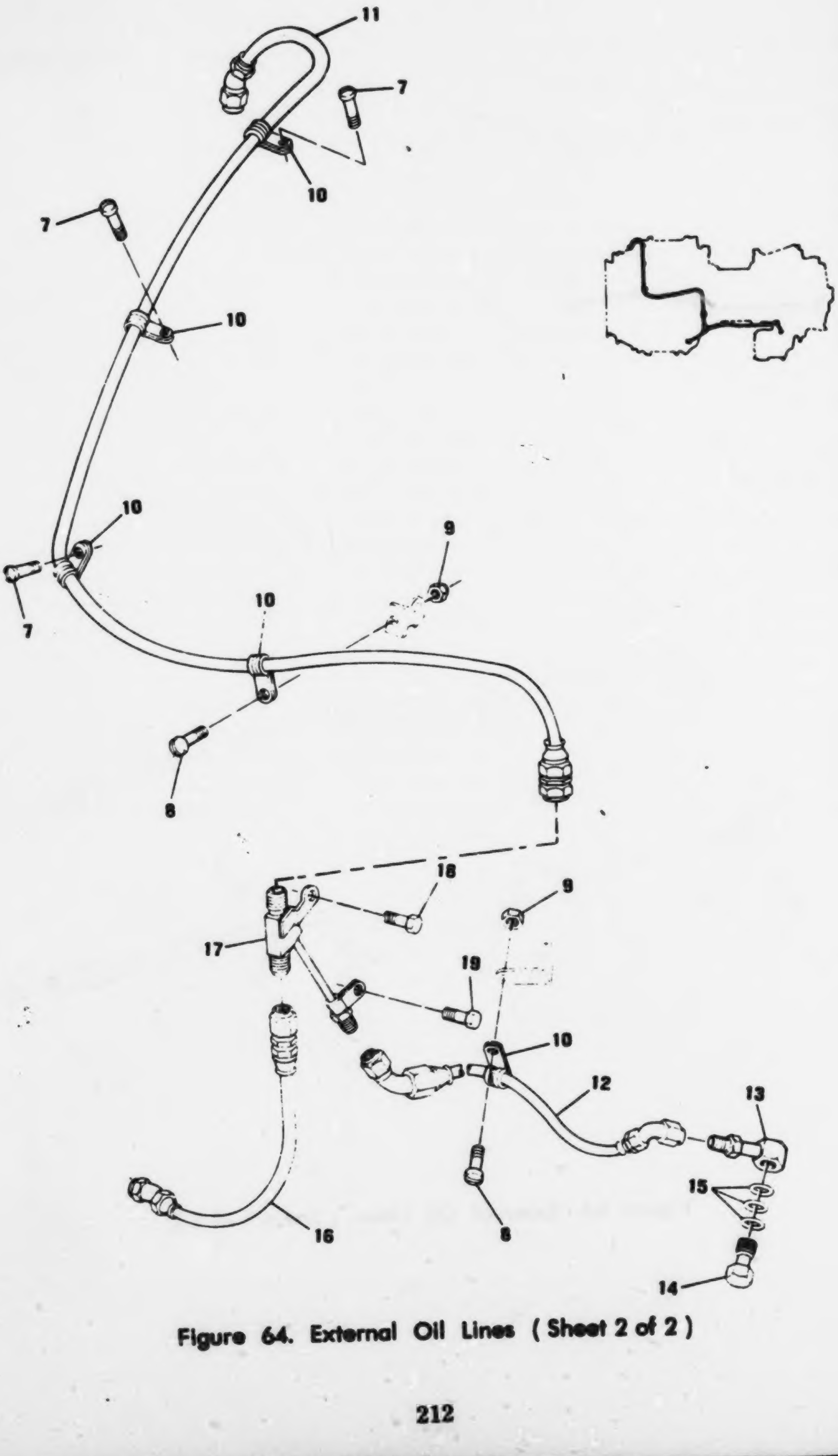

Figure 64. External Oil Lines (Sheet 2 of 2)

(1) ILLUSTRATION (a) FIG NO.	(1) ILLUSTRATION (b) ITEM NO	(2) SMR CODE	(3) NATIONAL STOCK NUMBER	(4) FSCM	(5) PART NUMBER	(6) DESCRIPTION USABLE ON CODE	(7) U/M	(8) QTY INC IN UNIT
						GROUP 0408 EXTERNAL OIL LINES (T53-L-13B)		
64	1	PAOZZ	4720-00-966-2201	91547	1-300-134	HOSE ASSEMBLY,NONME.....EZL	EA	1
64	2	PAOZZ	4720-00-763-7562	91547	1-300-377	HOSE ASSEMBLY,LOW P.....EZL	EA	1
64	3	PAOZZ	4730-00-834-9560	96906	MS24392D4	NIPPLE,TUBE.....EZL	EA	1
64	4	PCOZZ	5330-00-531-2068	80205	NAS617-8	PACKING,PREFORME.....EZL	EA	1
64	5	PAOZZ	4730-00-804-1589	91547	1-110-217-01	UNION,SCAVENGE.....EZL	EA	1
64	6	PCOZZ	5330-00-531-2070	80205	NAS617-4	PACKING,PREFORMED.....EZL	EA	1
64	7	PAOZZ	5305-00-969-6487	96906	MS35266-59	SCREW,MACHINE.....EZL	EA	4
64	8	PAOZZ	5305-00-150-9212	88044	AN502-10-8	SCREW,MACHINE.....EZL	EA	4
64	9	PAOZZ	5310-00-807-1467	96906	MS21042-3	NUT,SELF-LOCKING,EX.....EZL	EA	4
64	10	PAOZZ	5340-00-533-3512	81996	EAB700-5	CLAMP,LOOP.....EZL	EA	8
64	11	PAOZZ	4720-00-966-2203	91547	1-300-121	HOSE ASSEMBLY,NONME.....EZL	EA	1
64	12	PAOZZ	4720-00-195-9789	91547	1-300-225	HOSE ASSEMBLY,NONME.....EZL	EA	1
64	13	PAOZZ	2840-00-776-7086	91547	1-160-560-01	ADAPTER ASSEMBLY,OI.....EZL	EA	1
64	14	PAOZZ	2840-00-775-6512	91547	1-160-469-01	CONNECTOR,OIL LINE.....EZL	EA	1
64	15	PCOZZ	5330-00-584-0150	80205	NAS617-5	PACKING,PREFORME.....EZL	EA	3
64	16	PAOZZ	4720-00-986-9991	91547	1-300-054	HOSE ASSEMBLY,NONME.....EZL	EA	1
64	17	PAOZZ	2840-00-957-2709	91547	1-170-410-02	BRACKET ASSY,LUBRIC.....EZL	EA	1
64	18	PAOZZ	5306-00-269-6986	88044	AN103813	BOLT,MACHNINE.....EZL	EA	1
64	19	PAOZZ	5306-00-177-5558	96906	MS9530-09	BOLT,MACHINE.....EZL	EA	1

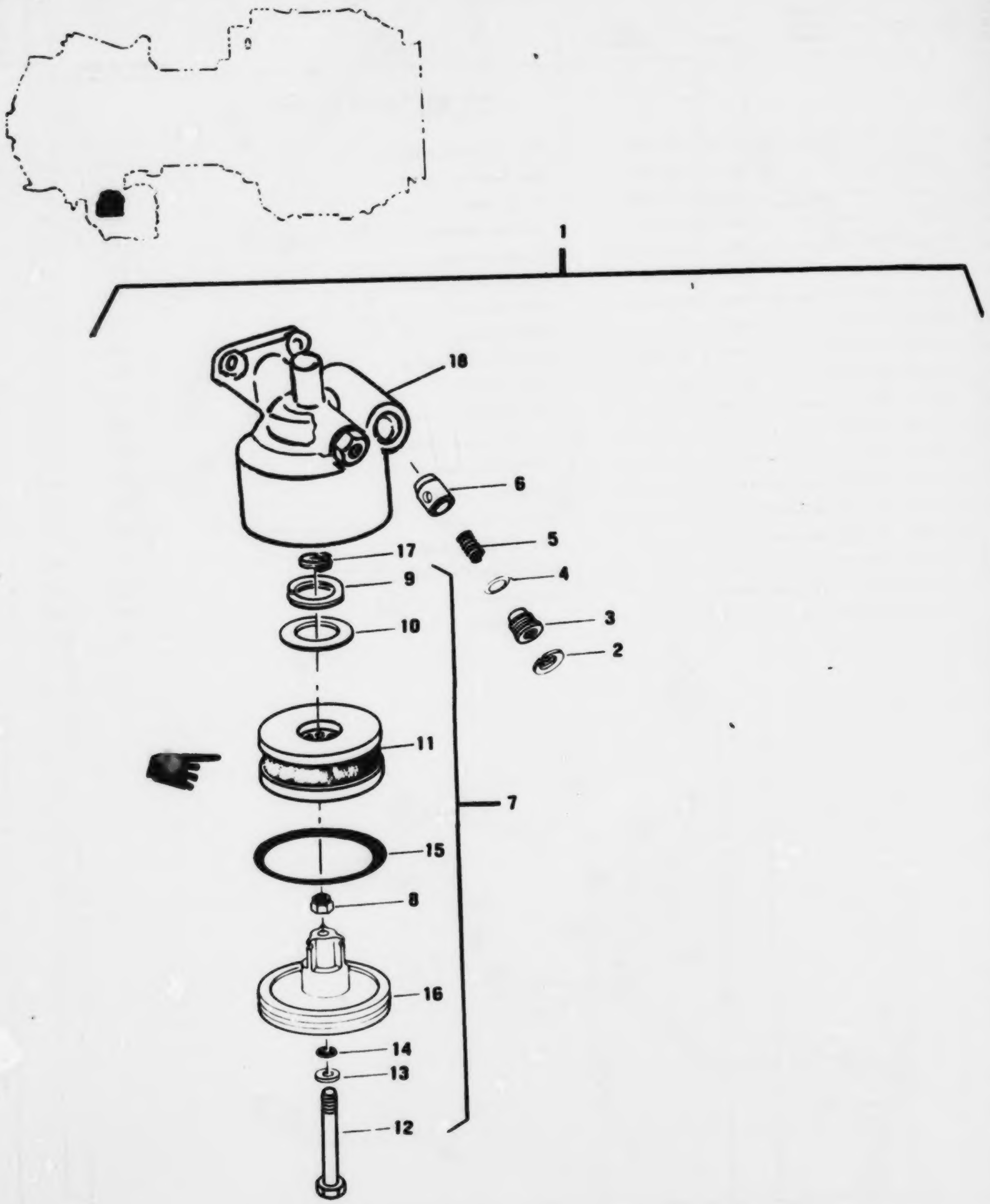

Figure 65. Filter, Fluid Pressure

SECTION II

(1) ILLUSTRATION (a) FIG NO	(b) ITEM NO	(2) SMR CODE	(3) NATIONAL STOCK NUMBER	(4) FSCM	(5) PART NUMBER	(6) DESCRIPTION USABLE ON CODE	(7) U/M	(8) QTY INC IN UNIT
						GROUP 0408 FILTER, FLUID PRESSURE		
65	1	PAOOO	2945-01-109-7178	91547	1-080-460-01	FILTER, FLUID, PRESSU SEE FIG.67 FOR NHA	EA	1
65	2	PAOZZ	5365-00-687-3379	96906	MS16625-1062	.RING,RETAINING	EA	1
65	3	PAOZZ	2840-00-446-6450	94592	SP796	.PLUG,HOUSING, FILTER	EA	1
65	4	PCOZZ	5330-00-809-4365	96906	MS29561-013	.PACKING, PREFORME	EA	1
65	5	PAOZZ	5360-00-446-6449	94592	SP795	.SPRING,HELICAL COMP	EA	1
65	6	PAOZZ	4820-00-446-6448	94592	SP794	.VALVE,RELIEF,PRESSU	EA	1
65	7	PAOOO	2945-00-446-6451	94592	SP799	.COVER ASSEMBLY, OIL	EA	1
65	8	PAOZZ	5310-00-198-4735	72962	Z1200-048	..NUT,SELF-LOCKING,SL	EA	1
65	9	PAOZZ	5365-00-814-2449	94592	SP801	..RING,RETAINING	EA	1
65	10	PAOZZ	2945-00-446-6446	94592	SP809	..END PLATE,OIL FILTE	EA	1
65	11	PAOZZ	2945-01-115-9547	91547	1-300-647-01	..FILTER ELEMENT	EA	1
65	12	PAOZZ	5306-00-446-6481	94592	SP806	..BOLT,MACHINE	EA	1
65	13	PAOZZ	5310-00-446-6479	94592	SP805	..WASHER,FLAT	EA	1
65	14	PCOZZ	5330-00-542-1420	96906	MS29561-010	..PACKING,PREFORME	EA	1
65	15	PCOZZ	5330-00-067-9994	96906	MS29561-146	..PACKING,PREFORME	EA	1
65	16	PAOZZ	2945-00-446-6445	94592	SP803	..COVER,OIL FILTER	EA	1
65	17	PAOZZ	5340-00-290-4497	96906	MS124736	.INSERT SCREW THREAD	EA	1
65	18	XAOZZ		91547	1-300-648	.FILTER HOUSING	EA	1

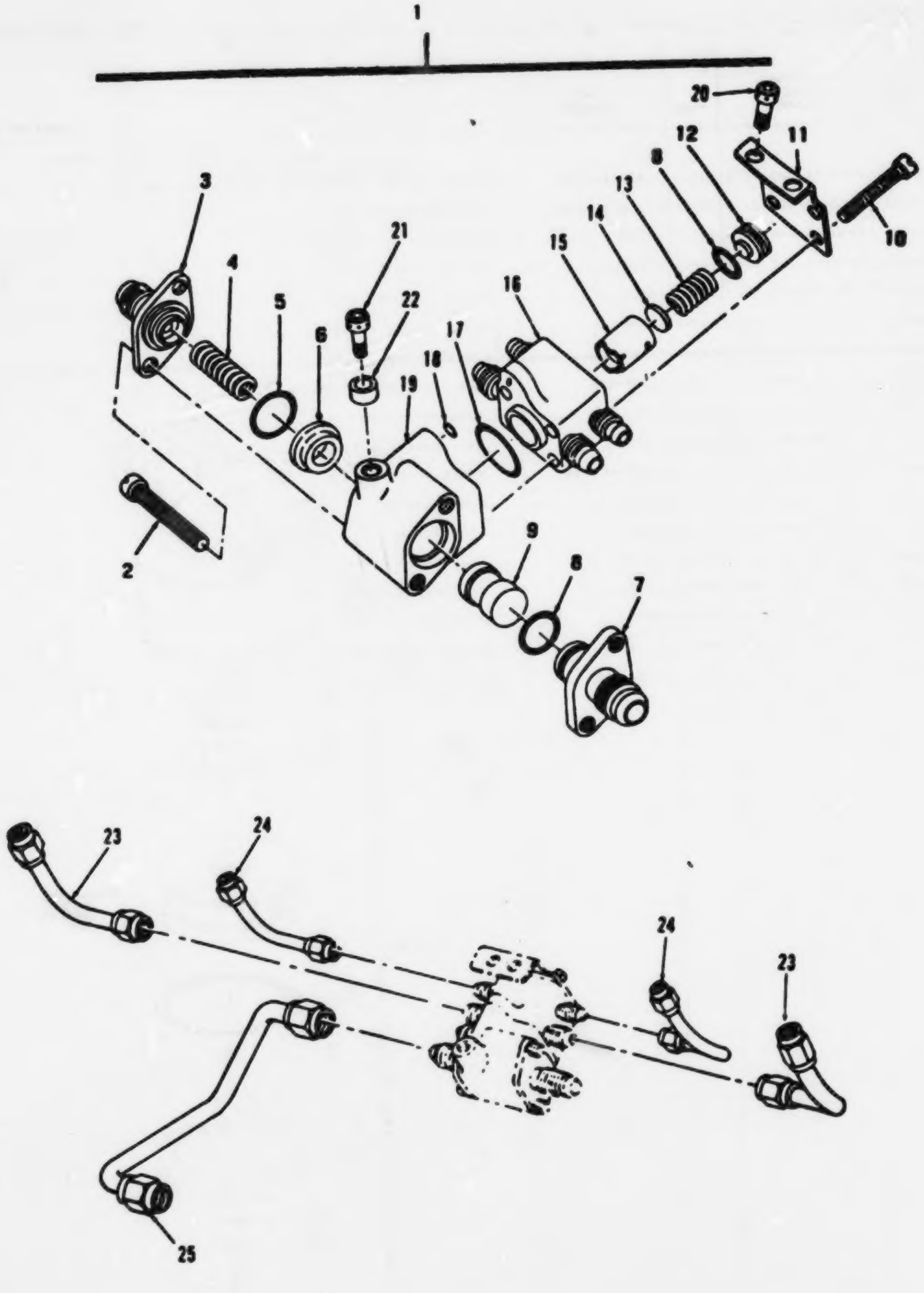

Figure 66. Valve Assembly, Flow Divider

(1) ILLUSTRATION (a) FIG NO	(1) ILLUSTRATION (b) ITEM NO	(2) SMR CODE	(3) NATIONAL STOCK NUMBER	(4) FSCM	(5) PART NUMBER	(6) DESCRIPTION USABLE ON CODE	(7) U/M	(8) QTY INC IN UNIT
						GROUP 0408 VALVE ASSEMBLY,FLOW DIVIDER		
						(T53-L-13B)		
66	1	PAODD	2840-00-782-1771	91547	1-180-190-03	VALVE,LINEAR,DIRECT CONTROL F71	EA	1
66	2	PADZZ	5305-00-271-9222	88044	AN502-10-26	.SCREW, MACHINE F71	EA	2
66	3	PADZZ	4730-00-803-9926	91547	1-180-122-03	.ADAPTER,STRAIGHT,FL F71	EA	1
66	4	PADZZ	5360-00-945-0210	91547	1-190-126-01	.SPRING,HELICAL,COMP F71	EA	1
66	5	PCDZZ	5330-00-248-3845	96906	MS29513-016	.PACKING,PREFORMED F71	EA	1
66	6	PCDZZ	5330-00-781-0952	91547	1-300-167-01	.PACKING WITH RETAIN F71	EA	1
66	7	PADZZ	2840-00-924-7667	91547	1-180-121-01	.ADAPTER MANIFOLD FU F71	EA	1
66	8	PCDZZ	5330-00-248-3840	96906	MS29513-014	.PACKING,PREFORMED F71	EA	2
66	9	PADZZ	2840-00-924-3827	91547	1-180-125-01	.PLUNGER,DUMP VALVE F71	EA	1
66	10	PADZZ	5305-00-924-0098	91547	1-180-134-01	.SCREW,MACHINE F71	EA	4
66	11	PADZZ	2840-00-924-3817	91547	1-180-200-01	.BRACKET ASSY,COVER F71	EA	1
66	12	PADZZ	2840-00-954-4278	91547	1-180-119-03	.CAP,SPRING RETAINER F71	EA	1
66	13	PADZZ	5360-00-945-9998	91547	1-180-127-02	.SPRING,HELICAL,COMP F71	EA	1
66	14	PAOZZ	5365-00-945-3910	91547	1-180-128-01	.SHIM F71	EA	1
66	15	PADZZ	2840-00-924-3830	91547	1-190-180-01	.PLUNGER ASSEMBLY,IN F71	EA	1
66	16	PADZZ	2840-00-944-4901	91547	1-180-170-01	.HOUSING,VALVE,DIREC F71	EA	1
66	17	PCDZZ	5330-00-248-3842	96906	MS29513-017	.PACKING,PREFORMED F71	EA	1
66	18	PCDZZ	5330-00-252-6048	96906	MS29513-006	.PACKING,PREFORMED F71	EA	1
66	19	PADZZ	2840-00-925-2971	91547	1-180-115-01	.HOUSING,FLOW DIVIDE F71	EA	1
66	20	PADZZ	5305-00-068-5358	96906	MS24673-1	SCREW,CAP,SOCKET F71	EA	2
66	21	PADZZ	5305-00-543-4517	96906	MS24673-2	SCREW,CAP,SOCKET HE F71	EA	1
66	22	PADZZ	5365-00-927-9941	91547	1-180-131-01	SPACER,SLEEVE F71	EA	1
66	23	PADZZ	4720-00-966-2204	91547	1-300-142	HOSE ASSEMBLY,NONME F71	EA	2
66	24	PADZZ	4720-00-910-3177	91547	1-300-141	HOSE ASSEMBLY,NONME F71	EA	2
66	25	PADZZ	4720-00-966-2230	91547	1-300-143	HOSE ASSEMBLY,NONME F71	EA	1

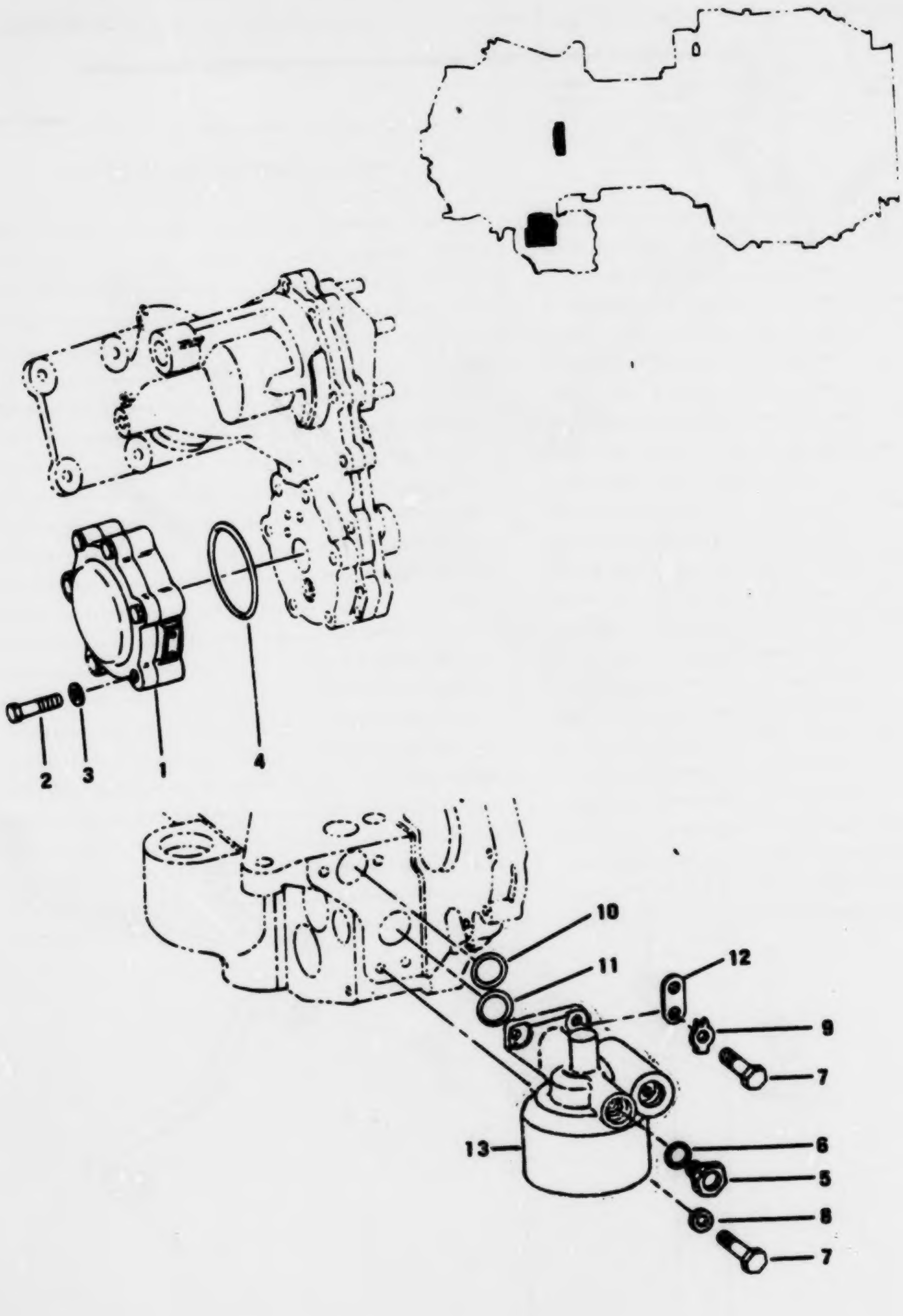

Figure 67. Pump, Rotary

SECTION II

(1) ILLUSTRATION (a) FIG NO.	(1) ILLUSTRATION (b) ITEM NO.	(2) SMR CODE	(3) NATIONAL STOCK NUMBER	(4) FSCM	(5) PART NUMBER	(6) DESCRIPTION USABLE ON CODE	(7) U/M	(8) QTY INC IN UNIT
						GROUP 0408 PUMP,ROTARY		
67	1	PAOZZ	4320-00-067-8128	51547	1-300-221	PUMP,ROTARY..	EA	1
67	2	PAOZZ	5306-00-637-8065	88044	AN103721	BOLT,MACHINE..	EA	6
67	3	PAOZZ	5310-00-167-0818	88044	AN960-10	WASHER,FLAT..	EA	6
67	4	PAOZZ	5330-00-726-7027	96906	MS29561-230	PACKING, PREFORM..	EA	1
67	5	PAOZZ	5365-00-837-0858	96906	MS24391D4L	PLUG,MACHINE THREAD..	EA	1
67	6	PAOZZ	5330-00-531-2070	80205	NAS617-4	PACKING,PREFORMED..	EA	1
67	7	PAOZZ	5306-00-282-3340	88044	AN102510	BOLT,MACHINE..	EA	4
67	8	PAOZZ	5310-00-167-0835	88044	AN960-416L	WASHER,FLAT..	EA	2
67	9	PAOZZ	5310-00-083-8364	51547	3103C18K11	WASHER,KEY..	EA	2
67	10	PCOZZ	5330-00-585-1066	96906	MS29561-114	PACKING,PREFORME..	EA	1
67	11	XDOZZ	5330-00-702-4713	96906	MS29561-115	PACKING,PREFORME..	EA	1
67	12	PAOZZ	3040-00-964-2109	51547	1-160-482-02	CONNECTING LINK,RIG..	EA	1
67	13	PAOOO	2945-01-109-7178	51547	1-090-460-01	FILTER ASSEMBLY SEE FIG.68 FOR BREAKDOWN..	EA	1
						COMPLETE ENGINE REPAIR KITS		
						FOR NAVY USE ONLY		
68		PBOZZ	2840-00-760-3532	51547	1-200-071-15	PARTS KIT,COMPRESSO THIS KIT TO BE USED ONLY IN SUPPORT OF NAVY L13 OER PROGRAM..F71	KT	1
68		PBOFD	8145-00-000-1988	03663	MP131065	.SHIPPING AND STORAG CONTAINER,ROTOR FOR NAVY USE....F71	EA	1
68		XDOFD	2840-01-005-4855	51547	1-130-720-40	.COMPRESSOR ROTOR,AX..F71	EA	1
68		AOOOO		51547	1-130-720-45	.ROTOR ASSEMBLY COMP USE AFT CMPL WITH MWO55-2840-229-50/2.. F71	EA	1
68		PAFZZ	2840-00-948-2416	51547	1-101-110-07	.VANE ASSEMBLY,STATO..F71	EA	1
68		PAFZZ	2840-00-925-9634	51547	1-101-120-03	.VANE ASSEMBLY,STATO..F71	EA	1
68		PAFZZ	2840-00-925-9621	51547	1-101-020-01	.VANE ASSEMBLY,STATO..F71	EA	1
68		PAFZZ	2840-00-925-9644	51547	1-101-030-01	.VANE ASSEMBLY,STATO..F71	EA	1
68		PAFZZ	2840-00-925-9620	51547	1-101-040-01	.VANE ASSEMBLY,STATO..F71	EA	1
68		PAFZZ	2840-00-121-6660	51547	1-200-070-91	PARTS KIT,COMPRESSO THIS KIT TO BE USED ONLY IN SUPPORT OF NAVY L13 OER PROGRAM..F71	EA	1
68		KFFZZ		51547	1-300-182-01	.PACKING,PREFORMED..F71	EA	2
68		KFFZZ		51547	1-300-368-01	.SEAL,SPECIAL..F71	EA	1
68		KFFZZ		96906	MS9202-015	.GASKET..F71	EA	1
68		KFFZZ		96906	MS9371-07	.GASKET..F71	EA	2
68		KFFZZ		96906	MS9373-017	.GASKET..F71	EA	2
68		KFFZZ		96906	MS29561-008	.PACKING,PREFORMED..F71	EA	2
68		KFFZZ		96906	MS9241-012	.PACKING,PREFORMED..F71	EA	2
68		KFFZZ		96906	MS29561-013	.PACKING,PREFORMED..F71	EA	2
68		KFFZZ		96906	MS29561-014	.PACKING,PREFORMED..F71	EA	2
68		KFFZZ		96906	MS29561-015	.PACKING,PREFORMED..F71	EA	4
68		KFFZZ		96906	MS29561-113	.PACKING,PREFORMED..F71	EA	2
68		KFFZZ		96906	MS29561-114	.PACKING,PREFORMED..F71	EA	1

(1) ILLUSTRATION (a) FIG NO.	(b) ITEM NO.	(2) SMR CODE	(3) NATIONAL STOCK NUMBER	(4) FSCM	(5) PART NUMBER	(6) DESCRIPTION USABLE ON CODE	(7) U/M	(8) QTY INC IN UNIT
66		XDFZZ	5330-00-702-4713	96906	MS29561-115	.PACKING,PREFORMED....................F71	EA	1
66		KFFZZ		96906	MS29561-122	.PACKING,PREFORMED....................F71	EA	4
66		KFFZZ		96906	MS29561-128	.PACKING,PREFORMED....................F71	EA	1
66		KFFZZ		96906	MS29561-131	.PACKING,PERFORME....................F71	EA	1
66		KFFZZ		96906	MS29561-144	.PACKING,PREFORMED....................F71	EA	1
66		KFFZZ		96906	MS29561-230	.PACKING,PREFORMED....................F71	EA	1
66		KFFZZ		51547	STD3C00B19	.PACKING,PREFORMED....................F71	EA	1
66		KFFZZ		51547	STD3C00B23	.PACKING,PREFORMED....................F71	EA	1
66		KFFZZ		51547	STD3C19H72	.PACKING,PREFORMED....................F71	EA	1
66		KFFZZ		51547	STD3C19C167	.PACKING,PREFORMED....................F71	EA	1
66		KFFZZ		51547	STD3C19F54	.PACKING,PREFORMED....................F71	EA	1
66		XBFZZ	2840-00-832-5648	51547	1-200-070-69	PARTS KIT,ROTOR ASS THIS KIT TO BE USED ONLY IN SUPPORT OF NAVY L11 SERIES COMPLETE ENGINE REPAIR PROGRAM........F76,F77	KT	1
66		XDFDD	2840-00-247-0354	51547	1-100-560-08	.COMPRESSOR ROTOR,AX....................F76,F77	EA	1
66		KFFDD		51547	1-130-080-09	.HOUSING ASSEMBLY,CO....................F76,F77	EA	1
66		KFFDD		51547	1-100-090-07	.HOUSING ASSEMBLY,IN....................F76,F77	EA	1
66		KFFZZ		51547	1-100-186-01	.INSERT,SCREW THREAD....................F76,F77	EA	4
66		KFFZZ		88044	AN101117	.BOLT,MACHINE....................F76,F77	EA	4
66		KFFZZ		96906	MS15795-310	.WASHER,FLAT....................F76,F77	EA	4
66		KFFZZ		96906	MS21042-2	.NUT,SELF-LOCKING,HE....................F76,F77	EA	4
66		PAFZZ	5330-00-832-5734	51547	1-200-070-70	PACKING ASSORTME THIS KIT TO BE USED ONLY IN SUPPORT OF NAVY L11 SERIES COMPLETE ENGINE REPAIR PROGRAM............F76,F77	KT	1
66		KFFZZ		51547	STD3C19E54	.PACKING,PREFORMED....................F76,F77	EA	1
66		KFFZZ		96906	MS29561-008	.PACKING,PREFORMED....................F76,F77	EA	1
66		KFFZZ		96906	MS29561-015	.PACKING,PREFORMED....................F76,F77	EA	1
66		KFFZZ		96906	MS29561-013	.PACKING,PREFORMED....................F76,F77	EA	2
66		KFFZZ		51547	STD3C19E63	.PACKING,PREFORMED....................F76,F77	EA	1
66		KFFZZ		51547	STD3C19C167	.PACKING,PREFORMED....................F76,F77	EA	1
66		PAFZZ	2840-00-832-5647	51547	1-200-070-71	PARTS KIT,ROTOR THIS KIT TO BE USED ONLY IN SUPPORT OF NAVY L11 SERIES COMPLETE ENGINE REPAIR PROGRAM............F76,F77	KT	1
66		KFFZZ		51547	1-060-002-01	.BOLT,MACHINE....................F76,F77	EA	1
66		KFFZZ		51547	STD3C53-50	.SCREW,CAP,SOCKET HE....................F76,F77	EA	1
66		KFFZZ		51547	1-060-125-01	.CUP,LOCKING....................F76,F77	EA	2
66		KFFZZ		51547	1-070-002-01	.SHIM,BEARING....................F76,F77	EA	1
66		KFFZZ		51547	1-100-276-01	.RING,LOCK....................F76,F77	EA	1
66		KFFZZ		51547	1-160-409-01	.SHIM....................F76,F77	EA	1
66		KFFZZ		51547	1-300-249-01	.SEAL,RING,METAL....................F76,F77	EA	1
66		KFFZZ		51547	STD3C22-123	.SCREW,CAP,SOCKET HE....................F76,F77	EA	4
66		KFFZZ		51547	STD3C53-25	.BOLT,MACHINE....................F76,F77	EA	4
66		KFFZZ		96906	MS9202-015	.GASKET....................F76,F77	EA	2
66		KFFZZ		51547	STD3C18K11	.WASHER,KEY....................F76,F77	EA	1

(1) ILLUSTRATION (a) FIG NO	(b) ITEM NO	(2) SMR CODE	(3) NATIONAL STOCK NUMBER	(4) FSCM	(5) PART NUMBER	(6) DESCRIPTION USABLE ON CODE	(7) U/M	(8) QTY INC IN UNIT
68		KFFZZ		51547	STC3C53-11	.BOLT,MACHINE..........F76,F77	EA	2
68		KFFZZ		51547	1-C6C-124-01	.SPACER,COMPRESSOR..........F76,F77	EA	1
68		KFFZZ		51547	1-C6C-124-02	.SPACER,COMPRESSOR..........F76,F77	EA	1
68		KFFZZ		51547	1-C6C-124-03	.SPACER,COMPRESSOR..........F76,F77	EA	1
68		KFFZZ		51547	1-10C-346-01	.RING,RETAINING..........F76,F77	EA	1
						GROUP 50 REPAIR KITS		
KITS		PAFZZ	2840-00-758-1541	51547	1-23C-030-25	MAINTENANCE KIT,COM U/C ALL T53 ENGINES SEE FIG.17 AND 18...	EA	1
KITS		KFFZZ		51547	1-14C-233-01	...NUT,POWER SHAFT,ENC..........	EA	1
KITS		KFFZZ		51547	1-16C-325-01	...LOCKING PLATE NUT..........	EA	1
KITS		KFFZZ		C5539	AR10C280	...PACKING..........	EA	1
KITS		PAOZZ	2840-00-758-4052	51547	1-23C-030-27	PARTS KIT,FUEL SYST U/C ALL T53-L ENGINES SEE FIG.37 AND 38.	EA	1
KITS		KFOZZ		51547	1-11C-197-01	...GASKET..........	EA	1
KITS		KFOZZ		96906	MS29513-010	...PACKING,PREFORMED..........	EA	1
KITS		KFOZZ		96906	MS29561-146	...PACKING,PREFORMED..........	EA	1
KITS		KFOZZ		96906	MS29512-10	...PACKING,PREFORMED..........	EA	1
KITS		KFOZZ		96906	MS29513-012	...PACKING,PREFORMED..........	EA	1
KITS		KFOZZ		96906	MS29513-027	...PACKING,PREFORMED..........	EA	1
KITS		KFOZZ		96906	MS29513-121	...PACKING,PREFORMED..........	EA	1
KITS		KFOZZ		96906	MS29513-024	...PACKING,PREFORMED..........	EA	1
KITS		KFOZZ		96906	MS29513-016	...PACKING,PREFORMED..........	EA	1
KITS		KFOZZ		96906	MS29561-010	...PACKING,PREFORMED..........	EA	2
KITS		KFOZZ		80205	NAS1595-61595-6	PACKING,PREFORMED..........	EA	3
KITS		KFOZZ		11599	28876	...FILTER ELEMENT..........	EA	1
KITS		PAFZZ	2840-00-952-4622	51547	1-23C-020-29	INSPECTION KIT,REDU SECTION SEE FIG.30..........F76,F77	EA	1
KITS		KFFZZ		51547	1-02C-017-01	...PACKING..........F76,F77	EA	1
KITS		KFFZZ		96906	MS29561-013	...PACKING,PREFORMED..........F76,F77	EA	3
KITS		KFFZZ		96906	MS29561-014	...PACKING,PREFORMED..........F76,F77	EA	6
KITS		KFFZZ		96906	MS9241-012	...PACKING,PREFORMED..........F76,F77	EA	2
KITS		KFFZZ		96906	MS29561-113	...PACKING,PREFORMED..........F76,F77	EA	2
KITS		KFFZZ		96906	MS29561-144	...PACKING,PREFORMED..........F76,F77	EA	1
KITS		KFFZZ		96906	MS29561-230	...PACKING,PREFORMED..........F76,F77	EA	1
KITS		PAOZZ	2925-00-740-6108	77820	10-88584-10	PARTS KIT,COIL AND SEE FIG. 55 AND FIG. 56..........	EA	1
KITS		XDOZZ	5365-00-488-8077	77820	10-166519	...RING RPLS-- FM1000..........	EA	1
KITS		KFOZZ		77820	10-166711	...PACKING,PREFORMED..........	EA	1
KITS		KFOZZ		77820	10-166712	...WASHER,FLAT..........	EA	1
KITS		KFOZZ		77820	10-166716	...WASHER,RECESSED..........	EA	1
KITS		KFOZZ		77820	10-166723-3	...SLEEVE,LEAD,IGNITER..........	EA	1
KITS		KFOZZ		77820	10-166724-6	...WASHER,SPRING TENSI..........	EA	1
KITS		KFOZZ		77820	10-70506-109	...COVER..........	EA	1

(1) ILLUSTRATION (a) FIG NO.	(b) ITEM NO	(2) SMR CODE	(3) NATIONAL STOCK NUMBER	(4) FSCM	(5) PART NUMBER	(6) DESCRIPTION USABLE ON CODE	(7) U/M	(8) QTY INC IN UNIT
KITS		KFOZZ		77820	10-70557-11	...CAF BOLS-- PN 10-7....................................	EA	2
KITS		KFOZZ		77820	10-315253	...INSULATOR....................................	EA	2
KITS		KFOZZ		77820	10-100378	...RING,RETAINING....................................	EA	2
KITS		XBDZZ		71840	A107376	SEAL,REPAIR KIT USED TO REPAIR SEAL,PLAIN ENCASED, PN 1-200-215 SEE FIG.16..........................F76,F77	KT	1
KITS		KBDZZ		71840	B1C2346-2	...CARBON RING..........................F76,F77	EA	1
KITS		KBDZZ		71840	B1C2346-3	...CARBON ASSEMBLY..........................F76,F77	EA	1
KITS		KBDZZ		71840	B1C2140-309	...CARTER SPRING..........................F76,F77	EA	2
KITS		KBDZZ		71840	B1C2142-90	...WAVE SPRING..........................F76,F77	EA	1
						GROUP 60 BULK MATERIALS		
BULK		PADZZ	2840-00-064-5338	51547	1-010-021-02	COVER,ENGINE PROTEC....................................	EA	
BULK		PADZZ	2840-00-583-4027	51547	EC22	CAP,LUG....................................	EA	
BULK		PADZZ	3439-00-224-3567	81348	QQS571	SOLDER,TIN ALLOY 3/32 IN.DIA,FED QQ-S-571, TYPE SN60WRAP3,5 LB SPOOL....................................	LB	
BULK		PADZZ	3439-00-246-0535	81349	MILR5031	ROD,WELDING 36 IN.LG,FOR GAS OR ARC WELDING,MIL-R-5031,CLASS 3....................................	EA	
BULK		PBDZZ	3439-00-255-4566	81348	OF506	FLUX,SOLDERING NONCORROSIVE,FOR L/6 TIN LEAD SOLDER,L/C COPPER METALS EXCEPT ALUMINUM,FED O-F-506,TYPE 1,FORM A,1/4 LB CAN....................................	EA	
BULK		PAFZZ	3439-00-640-3713	81348	OF499	FLUX,BRAZING ALUMINUM AND BRONZE,FED O-F-499,TYPE 1,1 LB BOTTLE....................................	EA	
BULK		PADZZ		81349	MILT8606	TUBE,CORROSION RESI STEEL-PASSIVATED FINISH, ANNEALED, SEAMLESS,10 IN. DIA,1/2 IN.WALL THK,10 FT TO 12 FT LG,MIL-T-8606....................................	EA	
BULK		PADZZ	4710-00-558-6036	81346	ASTMA312	TUBE,METALLIC....................................	FT	
BULK		PADZZ	4720-00-666-7656	50599	R231CC-3	SLEEVE,ANTI-CHAFIN....................................	IN	
BULK		PADZZ	4720-00-666-7657	50599	R231CC-4	TUBING,NONMETALLIC....................................	IN	
BULK		PADZZ	4720-00-752-5372	78570	54835-1	TUBING,NONMETALLIC....................................	EA	
BULK		PADZZ	5305-00-150-5211	81352	AN502-10-10	SCREW,MACHINE PLATED,FILLISTER,NO.10-32 NF,5/8 IN.LG........	EA	
BULK		PBDZZ	5305-00-558-5462	96906	MS35190-215	SCREW,MACHINE CADMIUM PLATED,FLAT HEAD, RECESSED HEAD,NO.2-56 NC, 1/2 IN.LG....................................	EA	
BULK		PAFZZ	5306-00-180-3339	88044	AN104012	BOLT,MACHINE PLATED,HEX HEAD,DRILLED HEAD,3/8 IN.-24 NF,1 IN.LG....................................	EA	
BULK		PADZZ	5310-00-167-0821	88044	AN960-616	WASHER,FLAT CADMIUM PLATED,0.390 IN.ID, 5/8 IN.OD,0.063 IN.THK, 3/8 IN.THD SIZE....................................	EA	
BULK		PADZZ	5310-00-183-4355	88044	AN960C616L	WASHER,FLAT 0.625 IN.OD,0.032 IN.THK, 3/8 IN.THD SIZE.......	EA	
BULK		PAFZZ	5310-00-531-5514	88044	AN960C6	WASHER,FLAT 0.375 IN.OD,0.032 IN.THK, NO.6 THD SIZE.........	EA	
BULK		PAFZZ	5330-00-051-7024	52758	CAF2171	PACKING MATERIAL....................................	IN	
BULK		PAFZZ	5330-00-056-5810	51547	1-010-092-01	GASKET....................................	EA	
BULK		PBFZZ	5330-00-166-1058	81349	M83248-2-110	PACKING,PREFORMED..........................F77,F7L	EA	
BULK		PBFZZ	5330-00-166-1059	81349	M83248-2-112	PACKING,PREFORMED..........................F77,F7L	EA	
BULK		PBFZZ	5330-00-182-3210	80205	NAS1594-115	PACKING,PREFORMED RUBBER,0.674 IN.ID,0.880 IN.OD,0.103 IN.THK....................................	EA	
BULK		PCFZZ	5330-00-250-0236	96906	MS29513-024	PACKING,PREFORME SYNTHETIC,HYDROCARBON FUEL RESISTANT,1.114 IN.ID,1.254 IN.OD,0.070 IN.THK....................................	EA	

(1) ILLUSTRATION (a) FIG NO	(b) ITEM NO	(2) SMR CODE	(3) NATIONAL STOCK NUMBER	(4) FSCM	(5) PART NUMBER	(6) DESCRIPTION USABLE ON CODE	(7) U/M	(8) QTY INC IN UNIT
BULK		PCDZZ	5330-00-650-5743	96906	MS9021-018	PACKING,PREFORMED RUBBER,0.734 IN.ID,0.874 IN.OD,0.067 IN.THK	EA	
BULK		PBFZZ	5330-00-782-7566	80205	NAS1594-010	PACKING,PREFORMED-S RUBBER,0.235 IN.ID,0.375 IN.OD,0.070 IN.THK	EA	
BULK		PBFZZ	5340-00-445-4451	96906	MS25177-10	CAP,PROTECTIVE,DUST MOISTURE SEAL	EA	
BULK		PAOZZ	5340-00-058-5785	80205	NAS818-3	PLUG,PROTECTIVE, MOISTURE SEAL-ALUMINUM ALLOY,3/8 IN.-24 NF, FOR 3/16 IN.OD TUBE	EA	
BULK		PAFZZ	5340-00-058-5804	80205	NAS818-2	PLUG,PROTECTIVE,DUS MOISTURE SEAL-ALUMINUM ALLOY,5/16 IN.-24 NF,FOR 1/8 IN.OD TUBE	EA	
BULK		PBFZZ	5340-00-151-5541	96906	MS51551F208	INSERT,SCREW THREAD PASSIVATED FINISH,RING LOCKED,SERRATED. 3/8 IN.-24 NF INTERNAL,9/16 IN.-12 NC EXTERNAL,0.620 IN.LG	EA	
BULK		PBFZZ	5340-00-151-5543	83324	R1210SL16	INSERT,SCREW THREAD PASSIVATED FINISH,1/2 IN.-20 NF INTERNAL,3/4 IN.-10 NC EXTERNAL,1 IN.LG	EA	
BULK		PBFZZ	5340-00-151-5571	96906	MS51551E206	INSERT,SCREW THREAD PASSIVATED FINISH,RING LOCKED,SERRATED. 1/4 IN.-28 NF INTERNAL,3/8 IN.-16 NC EXTERNAL,1/2 IN.LG	EA	
BULK		PBFZZ	5340-00-151-5575	83324	R1707SX8	INSERT,SCREW THREAD PASSIVATED FINISH,5/16 IN.-24 NF INTERNAL,1/2 IN.-20 NF EXTERNAL,1/2 IN. LG	EA	
BULK		PBFZZ	5340-00-151-5580	83324	R1705SX9	INSERT,SCREW THREAD PASSIVATED FINISH,7/16 IN.-20 NF INTERNAL,5/8 IN.-18 NF EXTERNAL,9/16 IN.LG	EA	
BULK		PBFZZ	5340-00-151-5581	83324	R1711SX9	INSERT,SCREW THREAD PASSIVATED FINISH,9/16 IN.-18 NF INTERNAL,3/4 IN.-16 NF EXTERNAL,9/16 IN.LG	EA	
BULK		PBFZZ	5340-00-151-7309	83324	RZA12112	INSERT,SCREW THR	EA	
BULK		PADZZ	5340-00-200-3046	88044	AN742F2	CLAMP,LOOP 0.125 IN.ID,0.020 IN.THK, 0.204 IN.HOLE DIA,FOR U/W 1/8 IN.OD RIGID TUBE	EA	
BULK		PAFZZ	5340-00-250-7225	80205	NAS816-17	CAP-PLUG,PROTECTIVE MOISTURE SEAL-VIRGIN POLYETHYLENE,0.177 IN.ID OPEN END,0.173 IN.DIA CLOSED END	EA	
BULK		PAFZZ	5340-00-250-7227	80205	NAS816-11	CAP-PLUG,PROTECT MOISTURE SEAL-VIRGIN POLYETHYLENE,0.120 IN.ID OPEN END,0.116 IN.DIA CLOSED END	EA	
BULK		PBFZZ	5340-00-407-5261	83324	SR5258	INSERT,SCREW THREAD PASSIVATED FINISH,1/4 IN.-28 NF INTERNAL,11/32 IN.-24 NS EXTERNAL,0.280 IN.LG	EA	
BULK		PAFZZ	5340-00-445-4451	96906	MS90376-10Y	CAP,PROTECTIVE,DUST F77,F71	EA	
BULK		PAFZZ	5340-00-514-2777	80205	NAS816-42	CAP-PLUG,PROTECTIVE MOISTURE SEAL-VIRGIN POLYETHYLENE,0.422 IN.ID OPEN END,0.427 IN.DIA CLOSED END	EA	
BULK		PAFZZ	5340-00-660-3716	96906	MS25178-22	CAP,PROTECTIVE,DUST MOISTURE SEAL-POLYETHYLENE, RED,NO.22 SHELL SIZE	EA	
BULK		PAFZZ	5340-00-682-2113	80205	NAS817-4	CAP,PROTECTIVE,C MOISTURE SEAL-ALUMINUM ALLOY,7/16 IN.-20 NF,FOR 1/4 IN.OD TUBE	EA	
BULK		PADZZ	5340-00-682-2117	80205	NAS817-10	CAP,PROTECTIVE,C MOISTURE SEAL-ALUMINUM ALLOY,7/8 IN.-14 NF, FOR 5/8 IN.OD TUBE	EA	
BULK		PAFZZ	5340-00-727-1055	80205	NAS816-75	CAP-PLUG PROTECT MOISTURE SEAL-VIRGIN POLYETHYLENE,0.809 IN.ID OPEN END,0.755 IN.DIA CLOSED END	EA	
BULK		PAFZZ	5340-00-784-7053	80205	NAS816-72	CAP-PLUG,PROTECT MOISTURE SEAL-VIRGIN POLYETHYLENE,0.761 IN.ID OPEN END,0.725 IN.DIA CLOSED END	EA	
BULK		PAFZZ	5340-00-804-1252	80205	NAS818-12	PLUG,PROTECTIVE,DUS MOISTURE SEAL-ALUMINUM ALLOY,1-1/16 IN.-12N,FOR 3/4 IN.OD TUBE	EA	
BULK		PAFZZ	5340-00-817-0512	80205	NAS818-4	PLUG,PROTECTIVE,DUS MOISTURE SEAL-ALUMINUM ALLOY,7/16 IN.-20 NF,FOR 1/4 IN.OD TUBE	EA	
BULK		PAFZZ	5340-00-817-0517	80205	NAS818-6	PLUG,PROTECTIVE, MOISTURE SEAL-ALUMINUM ALLOY,9/16 IN.-18 NF,FOR 3/8 IN.OD TUBE	EA	
BULK		PAFZZ	5340-00-817-2373	80205	NAS818-10	PLUG,PROTECTIVE, MOISTURE SEAL-ALUMINUM ALLOY,7/8 IN.-14 NF, FOR 5/8 IN.OD TUBE	EA	

(1) ILLUSTRATION		(2)	(3)	(4)	(5)	(6) DESCRIPTION	(7)	(8)
(a) FIG NO.	(b) ITEM NO.	SMR CODE	NATIONAL STOCK NUMBER	FSCM	PART NUMBER	USABLE ON CODE	U/M	QTY INC IN UNIT
BULK		PAFZZ	5340-00-E21-5EEE	EC2C5	NAS816-23	CAP-PLUG,PROTECT MOISTURE SEAL-VIRCIN PCLYETHYLENE,C.234 IN.IC CPEN ENC,0.236 IN.CIA CLOSED END........................	EA	
BULK		PAFZZ	5340-00-E26-5E53	EC2C5	NAS816-91	CAP-PLUG,PROTECT MOISTURE SEAL-VIRCIN PCLYETHYLENE,C.S6C IN.IC CPEN ENC,0.915 IN.CIA CLOSED END........................	EA	
BULK		PADZZ	5340-CO-833-7C39	EC2C5	NAS815-12A	PLUG,PROTECTIVE,DUS MOISTURE SEAL-VIRCINE PCLYETHYLENE,1-1/16 IN.-12A,FOR 3/4 IN.CC TUBE................................	EA	
BULK		PAFZZ	5535-00-E21-5E39	71468	C25-C478-000	CCVER,ELECTRICAL CC..	EA	
BULK		PAFZZ	5340-00-513-5376	8C205	NAS816-82	CAP-PLUG,PROTECT MOISTURE SEAL-VIRCIN PCLYETHYLENE,0.865 IN.IC CPEN ENC,0.820 IN.CIA CLOSED END........................	EA	
BULK		PAFZZ	5340-CO-516-2439	EC2C5	NAS816-98	CAP-PLUG,PROTECTIVE MOISTURE SEAL-VIRCIN PCLYETHYLENE,1.C40 IN.IC CPEN ENC,0.984 IN.CIA CLOSED END........................	EA	
BULK		PAFZZ	5365-CO-4E4-1673	83324	RLRR28SL8	RINC,LCCK,SERRATED C.323 IN.ID,C.468 IN.CD,C.138 IN.THK.....	EA	
BULK		PBFZZ	5365-CO-151-7153	83324	RLRR38SL7	RINC,LCCK,SERRAT C.468 IN.ID,C.624 IN.CD,C.115 IN.THK.......	EA	
BULK		PBFZZ	5365-00-485-C777	83324	RLRR38SL9	RING,LCCK,SERRAT 0.468 IN.ID,0.624 IN.OD,0.145 IN.THK.......	EA	
BULK		PBFZZ	5365-CO-151-7155	83324	RLRR47SL8	RINC,LCCK,SERRAT C.547 IN.ID,C.767 IN.CD,C.13C IN.THK.......	EA	
BULK		PBFZZ	5365-CO-4E4-1689	83324	RLRR56SL11	RINC,LCCK,SERRAT C.659 IN.ID,C.91C IN.CD, C.176 IN.THK......	EA	
BULK		PBFZZ	5365-CO-151-721C	83324	RLRR56SL8	RING,LCCK,SERRAT C.659 IN.ID,C.91C IN.CD,C.13C IN.THK.......	EA	
BULK		PADZZ	5365-00-278-EEC9	88C44	AN814-12DL	PLUC,MACHINE THREAC ALLOY,ANODIZED,HEX HEAD, DRILLED HEAD,1-1/16 IN.-12A,FOR 3/4 IN.CC TUBE................................	EA	
BULK		PBFZZ	5520-CC-C5C-4553	96906	MS90078-1C	FUSE,CARTRIDCE 1/4 IN.DIA,1-1/4 IN.LG.........................	EA	
BULK		PBFZZ	5520-CO-28C-8342	81349	FC2A250V1A	FUSE,CARTRIDCE 1/4 IN.CIA,1-1/4 IN.LG.........................	EA	
BULK		PBFZZ	5520-CO-28C-8344	96906	MS90078-7	FUSE,CARTRIDCE 1/4 IN.CIA,1-1/4 IN.LG.........................	EA	
BULK		PADZZ	5970-00-419-4291	81349	MIL-I-24391	TAPE,INSULATION,ELE PLASTIC,ADHESIVE,BLACK, 600C V DIELECTRIC STRENGTH, 3/4 IN.W,108 FT LG,C.CC8 IN.THK,MIL-I-24391..	EA	
BULK		PAFZZ	6145-00-643-C252	81349	MILW5846	CABLE,SPECIAL PURPC ELECTRICAL-CHROMEL AND ALUMEL,1 CONDUCTOR, STRANDED,INSULATED,C.259 IN.DIA,MIL-W-5846,TYPE 2, CLASS A..	EA	
BULK		PCDZZ	7510-CO-266-8712	192C3	6783476	TAPE,PRESSURE SENSI ADHESIVE-PAPER BACKING, CPACLE,WATER RESISTANT,1 IN.W,60 YD LG,3 IN.CORE ID, FED UU-T-106,TYPE 1..	YD	
BULK		PCDZZ	7510-CO-53C-8375	76381	36C	TAPE,PRESSURE SENSI ADHESIVE-GLASS CLOTH BACKING,CPACLE, NATURAL COLOR,CORROSION RESISTANT,1 IN.W,3 IN.ID CORE,USE FOR BONDING JOINTS IN LOW PRESSURE HOT AIR DUCTS WHERE.......	YD	
BULK		PCDZZ	7510-00-266-5CC6	81348	PPPT6C	TAPE,PRESSURE SENSI ADHESIVE-WATERPROOF,OPAQUE, OLIVE DRAB,4 IN.W,3 IN.CORE ID,FOR EXTERIOR PACKAGING, FED PPP-T-60,CLASS 1, 60 YD ROLL..	EA	
BULK		PCDZZ	7510-00-634-2946	81348	PPPT66	TAPE,PRESSURE SENSI ADHESIVE-VINYL ACETATE SHEET BACKING, CPAQUE,BLACK, 1 IN.W,3 IN.CORE ID,FED PPP-T-66,TYPE 1,CLASS 2, 36 YD ROLL..	YD	
BULK		PCDZZ	7510-00-266-5CC6	81348	PPPT6C	TAPE,PRESSURE SENSI ADHESIVE-FILM BACKING, CPACLE,OLIVE DRAB,2 IN.W,3 IN.ID CORE,FED PPP-T-60, TYPE 3,CLASS 1,60 YD ROLL..	EA	
BULK		PADZZ	7690-00-112-8581	96906	MS5244-01	MARKER,IDENTIFIC CENTER,W/RED SPECULAR BORDER,WHITE LETTERS INSCRIBED ON BORDER-RUBBER ASSEMBLY DATE,1/2 IN.W, 1 IN.LG...	EA	
BULK		PAODD	8115-CO-764-8732	11599	87439	SHIPPING AND STORAG CONTAINER-FUEL CONTROL...................	EA	
BULK		PBDZZ	8135-CO-161-7456	81349	MILP26514	CUSHIONING MATERIAL PCLYURETHANE FOAM,68 IN.W, 1 IN.THK,68 IN.LG,3 LB PER CUBIC FT DENSITY, MIL-P-26514,TYPE 1,CLASS 2..	EA	
BULK		PAFZZ	8135-CO-183-8814	81348	PPPC843	CUSHIONING MATERIAL CELLULOSE WADDING,WATER RESISTANT,LOW ABSORBENCY, 40 IN.W,169 FT LG,C.375 IN. THK,FED PPP-C-843, TYPE 2, CLASS B..	EA	

SECTION II

(1) ILLUSTRATION (a) FIG NO.	(b) ITEM NO.	(2) SMR CODE	(3) NATIONAL STOCK NUMBER	(4) FSCM	(5) PART NUMBER	(6) DESCRIPTION USABLE ON CODE	(7) U/M	(8) QTY INC IN UNIT
BULK		PAOZZ	8135-00-282-0565	15203	EC156C'	BARRIER MATERIAL,WA VAPORPROOFED,FLEXIBLE 36 IN.W,200 YD ROLL, MIL-B-131,CLASS 1	YD	
BULK		PAFZZ	8135-00-753-4661	81349	MILB121	BARRIER MATERIAL,GR GREASEPROOFED-WATERPROOFED, FLEXIBLE-CREPED,HEAVY DUTY TYPE,W/O TRANSFERABLE COATING ON GREASEPROOF SIDE,REC,36 IN.W,MIL-B-121, TYPE 1,GRADE A,CLASS 2	[illegible]	
BULK		PCDZZ	9320-00-258-7567	81343	AMS3238	RUBBER STOCK,CEL SYNTHETIC,BUNA-N,OIL RESISTANT,HOLLAND LINEN BACKING,0.250 IN.THK, AMS3238	EA	
BULK		PAOZZ	9505-00-253-4206	96906	MS20995C32	WIRE,NONELECTRICAL RESISTING-ANNEALED,0.032 IN.DIA,383 FT PER LB,FED QQ-W-423,COMP 302,1 LB SPOOL	LB	
BULK		PAOZZ	9505-00-556-5101	73471	535758	WIRE,NONELECTRICAL RESISTING-ANNEALED,0.020 IN.DIA,926 FT PER LB,FED QQ-W-423,COMP 302,5 LB COIL	LB	
BULK		PADZZ	9505-00-531-7232	81343	AS100027	WIRE,NONELECTRICAL RESISTING-0.02[illegible] IN.DIA, [illegible]79 FT PER LB,10 LB COIL	LB	
BULK		PBDZZ	9510-00-142-6464	81343	AMS5769	METAL BAR POLISHED SURFACE FINISH,2 IN.W,36 IN.LG,3/8 IN. THK, AMS5769	EA	
BULK		PBDZZ	9510-00-155-5324	81349	MILS5626	METAL BAR FINISHED,ANNEALED,1-1/2 IN. DIA,12 FT TO 20 FT LG, MIL-S-5626,COMP 4140	EA	
BULK		XCDZZ	9510-00-406-5064	81343	AMS5765	METAL BAR 3/8 IN.W,5/16 IN.H,3 FT LG, AMS5765	EA	
BULK		PADZZ	9515-00-632-2962	81343	AMS5532	METAL SHEET ANNEALED,POLISHED SURFACE FINISH,24 IN.W,36 IN.LG, 0.066 IN.THK,AMS5532	EA	
BULK		PAFZZ	9515-00-640-4145	81349	MIL518729	METAL SHEET ROLLED,ANNEALED,DESCALED SURFACE FINISH,36 IN.W, 96 IN.LG,0.036 IN.THK, MIL-S-18729,COMP 4130	EA	
BULK		PBFZZ	9515-00-640-4145	81349	MIL518729	METAL SHEET ROLLED,ANNEALED,DESCALED SURFACE FINISH,36 IN.W, 96 IN.LG,0.018 IN.THK, MIL-S-18729,COMP 4130	EA	
BULK		PBDZZ	9515-00-640-4236	81349	MIL56721	METAL SHEET ROLLED,ANNEALED,DULL FINISH,24 IN.W,58 IN.LG, 0.018 IN.THK,MIL-S-6721, COMP TI	EA	
BULK		PAOZZ	9525-00-803-2044	96906	MS20995NC32	WIRE,NONELECTRICAL ANNEALED,COLD DRAWN,0.032 IN.DIA,328 FT PER LB, 5 LB SPOOL	LB	
BULK		PADZZ		81348	QQA225-8	METAL ROD-ALUMINUM QQ6061-T6,5/16 IN.DIA,10 FT TO 12 FT LG, FED QQ-A-225/8	EA	
BULK		PADZZ	9535-00-232-1856	81348	QQA250-1	METAL SHEET QQ1100-O,ANNEALED,36 IN.W, 96 IN.LG,0.020 IN. THK, FED QQ-A-250/1	EA	
BULK		PADZZ	9535-00-232-6947	81348	QQA250-4	METAL PLATE QQ2024-T4,48 IN.W,144 IN. LG,1/4 IN.THK,FED QQ-A-250/4	EA	
BULK		PADZZ	9535-00-245-5605	81348	QQA250-13	METAL SHEET QQ7075-T6,ALCLAD,48 IN.W, 144 IN.LG,0.090 IN.THK, FED QQ-A-250/13	EA	
		SECTION III				GROUP 01 SPECIAL TOOLS LIST		
F1	1	PAOZZ	1730-00-503-5020	51547	LTCT2056	SLING,AIRCRAFT MAIN BCI 1 AUTH FOR 1-50 EQUIP	EA	
F1	2	PBCZZ	5120-00-515-2337	51547	LTCT516	PULLER,MECHANICAL BCI 1 AUTH FOR 1-50 EQUIP	EA	
F1	3	PAOZZ	5120-00-520-4242	11599	STC65561	ADAPTER,TORQUE WRENCH BCI 1 AUTH FOR 1-50 EQUIP	EA	
F1	4	PFOZZ	5120-00-520-4224	11599	STC64863	DRIVER,BEARING AND BCI 1 AUTH FOR 1-50 EQUIP	EA	
F1	4	PFDZZ	5120-00-520-4223	11599	STC64861	DRIVER,BEARING AND BCI 1 AUTH FOR 1-50 EQUIP	EA	
F1	5	PBOZZ	5220-00-241-5266	51547	LTCT6517	GAGE,SPLINE BCI 1 AUTH FOR 1-53 EQUIP	EA	
F1	6	XDDZZ	4520-00-253-1707	51547	LTCT11249	FIXTURE,MACHINING,R ... F76,F77 BCI 1 AUTH FOR 1-50 EQUIP	EA	

(1) ILLUSTRATION		(2)	(3)	(4)	(5)	(6) DESCRIPTION	(7)	(8)
(a) FIG NO	(b) ITEM NO	SMR CODE	NATIONAL STOCK NUMBER	FSCM	PART NUMBER	USABLE ON CODE	U/M	QTY INC IN UNIT
F1	6	PBDZZ	4920-00-253-1308	51547	LTCT11253	FIXTURE,PACKING,B....................................F76,F77 BOI 1 AUTH FOR 1-50 EQUIP	EA	
F1	7	PBDZZ	4920-00-253-1309	51547	LTCT13205	PLUG ASSEMBLY,SEAL.................................... BOI 1 AUTH FOR 1-50 EQUIP	EA	
F1	8	PBDZZ	4920-00-253-1305	51547	LTCT13236	FIXTURE,TEST,SEAL.................................... BOI 1 AUTH FOR 1-50 EQUIP	EA	
F1	9	PBDZZ	4920-00-420-0882	51547	LTCT6203	FIXTURE,ASSEMBLING,....................................F7L BOI 1 AUTH FOR 1-50 EQUIP	EA	
F1	10	PBDZZ	4920-00-176-8421	51547	LTCT11323	FIXTURE,HOLDING,NOZ....................................F7L BOI 1 AUTH FOR 1-50 EQUIP	EA	
F2	1	PBDZZ	4920-00-155-1025	51547	LTCT14243	FIXTURE,HOLDING U/W LTCT4532.................................... BOI 1 AUTH FOR 1-50 EQUIP	EA	
F2	2	PBFZZ	4920-00-856-7525	51547	LTCT1644	TOOL,INSTALLING AND PLACES.................................... BOI 1 AUTH FOR 1-50 EQUIP	EA	
F2	2	PBFZZ	4920-00-851-4453	51547	LTCT1643	DRIFT ASSEMBLY,COMP.................................... BOI 1 AUTH FOR 1-50 EQUIP	EA	
F2	3	PBFZZ	5120-00-727-4481	51547	LTCT3825	INSTALLATION TOOL,S....................................F71 BOI 1 AUTH FOR 1-50 EQUIP	EA	
F2	4	PFOZZ	5120-00-920-4246	11599	STD64843	PUNCH,STAKING.................................... BOI 1 AUTH FOR 1-50 EQUIP	EA	
F2	5	PBDZZ	4920-00-842-6325	51547	LTCT4875	FIXTURE,TEST,PRESSU.................................... BOI 1 AUTH FOR 1-50 EQUIP	EA	
F2	6	PBDZZ	4920-00-885-7249	51547	LTCT3833	HOLDER,GEARSHAFT.................................... BOI 1 AUTH FOR 1-50 EQUIP	EA	
F2	7	PBDZZ	4920-00-484-3554	51547	LTCT3788	JIG,DRILL,HOUSING,C.................................... BOI 1 AUTH FOR 1-50 EQUIP	EA	
F2	8	PBDZZ	4920-00-435-7814	11599	STD67086	FIXTURE,HOLDING,PUM....................................F71 BOI 1 AUTH FOR 1-50 EQUIP	EA	
F2	9	PBDZZ	5120-00-176-0577	11599	STD67005	PULLER,MECHANICAL.................................... BOI 1 AUTH FOR 1-50 EQUIP	EA	
F2	10	PBFZZ	5120-00-165-0122	83324	R1707D	TOOL,LOCK RING U/W R1707SX8,RCA38-453, R110BW,RIRR3BSL7, RL38SU7.................................... BOI 1 AUTH FOR 1-50 EQUIP	EA	
F2	10	PBFZZ	5120-00-165-0123	83324	R1711D	TOOL,LOCK RING U/W R1711SX5,RCA56-667.................................... BOI 1 AUTH FOR 1-50 EQUIP	EA	
F2	10	PBFZZ	5120-00-473-7017	83324	R210D	DRIVER,BEARING AND U/W RJ21CSX16,R21CSX12,R1111W, RCAC56-641 & RCACC56-641.................................... BOI 1 AUTH FOR 1-50 EQUIP	EA	
F2	11	PBFZZ	5120-00-473-7702	83324	R110BW	WRENCH INSERT U/W R1707SX8 & RJ20ESX10.................................... BOI 1 AUTH FOR 1-50 EQUIP	EA	
F2	11	PBFZZ	5120-00-776-1837	83324	R1111W	WRENCH,INSERTS U/W RJ21CSX16,R1711SX5 & R21CSX12.................................... BOI 1 AUTH FOR 1-50 EQUIP	EA	
F2	12	PBFZZ	5133-00-116-2752	83324	RCAD38-453	DRILL,TWIST U/W R110BW,R1707D.................................... BOI 1 AUTH FOR 1-50 EQUIP	EA	

(1) ILLUSTRATION (a) FIG NO.	(b) ITEM NO	(2) SMR CODE	(3) NATIONAL STOCK NUMBER	(4) FSCM	(5) PART NUMBER	(6) DESCRIPTION USABLE ON CODE	(7) U/M	(8) QTY INC IN UNIT
F3	1	PAOZZ	5120-00-535-7585	11599	SID62494'	WRENCH,BOX AND OPEN.. BOI 1 AUTH FOR 1-50 EQUIP	EA	
F3	2	PBOZZ	4920-00-105-3033	51547	LTCT4556	FIXTURE,HOLDING,OEA.. BOI 1 AUTH FOR 1-50 EQUIP	EA	
F3	3	PBOZZ	5120-00-554-3282	51547	LTCT526	FIXTURE,ALIGNMENT.. BOI 1 AUTH FOR 1-50 EQUIP	EA	
F3	4	PBOZZ	5210-00-257-1131	51547	LTCT5856	GAGE,SPLINE WEAR.. BOI 1 AUTH FOR 1-50 EQUIP	EA	
F3	5	PFOZZ	5120-00-520-5439	11599	SID64517	WRENCH,SOCKET.. BOI 1 AUTH FOR 1-50 EQUIP	EA	
F3	6	PFOZZ	5120-00-520-5435	11599	SID65571	CLAMP,FIXTURE,ALIGN.. BOI 1 AUTH FOR 1-50 EQUIP	EA	
F3	7	PBOZZ	5120-00-464-1817	51547	LTCT11272	REMOVAL TOOL,VANE..F76,F77 BOI 1 AUTH FOR 1-50 EQUIP	EA	
F3	7	PBOZZ	5120-00-464-1823	51547	LTCT11271	REMOVAL TOOL,VANE..F76,F77 BOI 1 AUTH FOR 1-50 EQUIP	EA	
F3	8	PBOZZ	3465-00-221-4535	51547	LTCT11275	TEMPLATE,VANE..F71 BOI 1 AUTH FOR 1-50 EQUIP	EA	
F3	9	PBOZZ	4920-00-245-1830	51547	LTCT11276	FIXTURE,HOLDING,FIN..F71 BOI 1 AUTH FOR 1-50 EQUIP	EA	
F3	10	PBOZZ	4920-00-124-7571	51547	LTCT11060	FIXTURE,HOLDING,TUR..F76,F77 BOI 1 AUTH FOR 1-50 EQUIP	EA	
F3	11	PBOZZ	5120-00-421-1773	11599	SID67082	DRIVER,BEARING AND..F71 BOI 1 AUTH FOR 1-50 EQUIP	EA	
F4	1	PBFZZ	5120-00-780-5252	51547	LTCT843	PULLER,SLEEVE,BEARI..F76,F77 BOI 1 AUTH FOR 1-50 EQUIP	EA	
F4	2	PBOZZ	4920-00-437-7999	51547	LTCT11277	PULLER,GUIDE VANE..F76,F77 BOI 1 AUTH FOR 1-50 EQUIP	EA	
F4	3	PAOZZ	5120-00-909-4210	51547	LTCT12037	HOLDER ASSEMBLY,OEA.. BOI 1 AUTH FOR 1-50 EQUIP	EA	
F4	3	PBOZZ	5120-00-909-4209	51547	LTCT12035	HOLDER ASSEMBLY,OEA..F76,F77 BOI 1 AUTH FOR 1-50 EQUIP	EA	
F4	4	PBFZZ	1730-00-876-2274	51547	LTCT67	SLING,AIRCRAFT MAIN.. BOI 1 AUTH FOR 1-50 EQUIP	EA	
F4	5	XBOZZ	4920-00-421-1395	51547	LTCT11201	FIXTURE,GRINDING,BE..F76,F77 BOI 1 AUTH FOR 1-50 EQUIP	EA	
F4	6	XBOZZ	4920-00-420-0877	51547	LTCT11208	SHIELD,REAR BEARING HOUSING..F76,F77 BOI 1 AUTH FOR 1-50 EQUIP	EA	
F4	7	PFOZZ	4920-00-522-7788	51547	LTCT11295	FIXTURE,HOLDING NO2..F71 BOI 1 AUTH FOR 1-50 EQUIP	EA	
F4	7	PBOZZ	4920-00-522-2757	51547	LTCT11296	FIXTURE,HOLDING,NO2..F71 BOI 1 AUTH FOR 1-50 EQUIP	EA	
F4	8	PBOZZ	5120-00-228-8836	51547	LTCT6505	PUNCH,SEAL PLATE..F71 BOI 1 AUTH FOR 1-50 EQUIP	EA	
F4	9	PBOZZ	4920-00-405-8219	51547	LTCT13688	FIXTURE,HOLDING,NO2..F71 BOI 1 AUTH FOR 1-50 EQUIP	EA	
F4	10	PBOZZ	3465-00-181-2745	51547	LTCT11327	TEMPLET,ELECTRODE,S..F71 BOI 1 AUTH FOR 1-50 EQUIP	EA	

(1) ILLUSTRATION (a) FIG NO	(b) ITEM NO	(2) SMR CODE	(3) NATIONAL STOCK NUMBER	(4) FSCM	(5) PART NUMBER	(6) DESCRIPTION USABLE ON CODE	(7) U/M	(8) QTY INC IN UNIT
F4	13	PBDZZ	3465-00-161-2344	51547	LTC111328	TEMPLET,ELECTRODE,S .... F71 BCI 1 AUTH FOR 1-50 EQUIP	EA	
F5	1	PBFZZ	4920-00-583-7555	51547	LTC14013	INSTALLING TOOL,CON .... BCI 1 AUTH FOR 1-50 EQUIP	EA	
F5	2	XBDZZ	4920-00-435-7831	51547	LTC16587	TEST FIXTURE,ENGINE .... BCI 1 AUTH FOR 1-50 EQUIP	EA	
F5	3	PADZZ	5120-00-513-5526	51547	LTC14002	SOCKET,WRENCH,FACE 4 PRONGS,0.228 IN.MAX W, 0.312 IN.LG, FEMALE SQ DRIVE 0.506 IN.MAX,2.500 IN.O/D .... BCI 1 AUTH FOR 1-50 EQUIP	EA	
F5	3	PBFZZ	5120-00-053-2403	51547	LTC11109	SOCKET,WRENCH,FACE .... BCI 1 AUTH FOR 1-50 EQUIP	EA	
F5	3	PAFZZ	5120-00-853-2515	51547	LTC1215	SOCKET,WRENCH,FA .... BCI 1 AUTH FOR 1-50 EQUIP	EA	
F5	3	PBDZZ	5120-00-835-3011	51547	LTC14193	SOCKET,WRENCH,FACE .... BCI 1 AUTH FOR 1-50 EQUIP	EA	
F5	3	PAFZZ	5120-00-835-0783	51547	LTC1107	SOCKET,WRENCH,FA .... BCI 1 AUTH FOR 1-50 EQUIP	EA	
F5	3	PBFZZ	4920-00-473-7569	51547	LTC1505	SOCKET,WRENCH .... F77,F71 BCI 1 AUTH FOR 1-50 EQUIP	EA	
F5	3	PADZZ	5120-00-780-8275	51547	LTC1487	SOCKET,WRENCH,FACE .... BCI 1 AUTH FOR 1-50 EQUIP	EA	
F5	4	PBFZZ	5120-00-566-5549	51547	LTC14161	SOCKET,WRENCH,FACE .... F71 BCI 1 AUTH FOR 1-50 EQUIP	EA	
F5	5	MFFZZ		81556	522CEC003-3	GAGE,FUEL,VAPORIZER .... F76,F77 BCI 1 AUTH FOR 1-50 EQUIP	EA	
F5	6	XBDZZ		51547	LTC16529	MEASURING KIT SET,N .... F76,F77 BCI 1 AUTH FOR 1-50 EQUIP	EA	
F5	7	PBFZZ	5120-00-405-5122	51547	LTC113676	ADAPTER,CONE REMOVA .... F76,F77 BCI 1 AUTH FOR 1-50 EQUIP	EA	
F5	8	PADZZ	5120-00-015-6557	11555	STC63425	WRENCH,LOCKNUT A .... BCI 1 AUTH FOR 1-50 EQUIP	EA	
F5	9	PBFZZ	5120-00-482-2543	30851	PD2501	MULTIPLIER,TORQUE W .... BCI 1 AUTH FOR 1-50 EQUIP	EA	
F5	10	PBFZZ	5210-00-152-0104	52055	PD2555	.INDICATOR ASSEMBLY	EA	
F5	11	PBFZZ	5120-00-152-1552	30851	PD2545	.HANDLE,TORQUE WRENC	EA	
F5	12	PBFZZ	5120-00-152-1553	30851	PD2546	.HANDLE,TORQUE WRENC	EA	
F5	13	PBFZZ	5120-00-152-1550	30851	PD2547-8	.BAR,SOCKET WRENCH H	EA	
F6	1	PBFZZ	5120-00-842-8360	51547	LTC14800	PULLER,MECHANICAL .... BCI 1 AUTH FOR 1-50 EQUIP	EA	
F6	2	PADZZ	4920-00-010-5487	11555	STC63426	WRENCH,LOCKNUT ACCE .... F76,F77 BCI 1 AUTH FOR 1-50 EQUIP	EA	

(1) ILLUSTRATION (a) FIG NO	(b) ITEM NO	(2) SMR CODE	(3) NATIONAL STOCK NUMBER	(4) FSCM	(5) PART NUMBER	(6) DESCRIPTION USABLE ON CODE	(7) U/M	(8) QTY INC IN UNIT
86	3	XBDZZ		51547	LTCT11112	GAGE,DEPTH,DIAL IND......F76,F77 BCI 1 AUTH FOR 1-50 EQUIP	EA	
86	4	PBDZZ	5220-00-131-1555	51547	LTCT2653	GAGE,COMTOUR...... BCI 1 AUTH FOR 1-50 EQUIP	EA	
86	5	PADZZ	4920-00-523-4302	11599	STC64501	FIXTURE,FOCUSING,VA...... BCI 1 AUTH FOR 1-50 EQUIP	EA	
86	6	XBDZZ		51547	LTCT6139	GAGE ADAPTER,CONTOU...... BCI 1 AUTH FOR 1-50 EQUIP	EA	
86	7	XDDZZ	4920-00-145-2876	51547	LTCT13397	FIXTURE,GRINDING......F71 BCI 1 AUTH FOR 1-50 EQUIP	EA	
86	8	PBDZZ	5220-00-132-4530	51547	LTCT6561	GAGE SET,MASTER......F71 BCI 1 AUTH FOR 1-50 EQUIP	EA	
86	9	PBDZZ	4920-00-228-1834	51547	LTCT6562	FIXTURE,FIRST STAGE......F71 BCI 1 AUTH FOR 1-50 EQUIP	EA	
86	10	PADZZ	5120-00-578-2269	11599	STC62614	PULLER,MECHANICAL VALVE...... BCI 1 AUTH FOR 1-50 EQUIP	EA	
87	1	PAFZZ	4920-00-841-0414	51547	LTCT4533	FIXTURE,HOLDING,SHA...... BCI 1 AUTH FOR 1-50 EQUIP	EA	
87	2	PADZZ	5120-00-361-8588	51547	LTCT751	TOOL,INSTALL,BEARIN...... BCI 1 AUTH FOR 1-50 EQUIP	EA	
87	3	PBDZZ	4920-00-505-2557	51547	LTCT2041	FIXTURE,TEST,FLOW...... BCI 1 AUTH FOR 1-50 EQUIP	EA	
87	4	PBDZZ	4920-00-523-2775	51547	LTCT512	FIXTURE,OIL FLOW SU...... BCI 1 AUTH FOR 1-50 EQUIP	EA	
87	5	PBFZZ	5120-00-104-8364	51547	LTCT6104	INSTALLING TOOL,BRI......F76,F77 BCI 1 AUTH FOR 1-50 EQUIP	EA	
87	6	PBDZZ	5120-00-104-8817	11599	STC65593	RETAINER,CLUTCH PIN...... BCI 1 AUTH FOR 1-50 EQUIP	EA	
87	7	PBDZZ	5120-00-104-5028	11599	STC65653	ADAPTER,TORQUE A...... BCI 1 AUTH FOR 1-50 EQUIP	EA	
87	8	XDDZZ		51547	LTCT11175	TEMPLATE,HINGE BLTT......F76,F77 BCI 1 AUTH FOR 1-50 EQUIP	EA	
87	9	PBFZZ	5120-00-132-4531	51547	LTCT6593	WRENCH,SPECIAL......F71 BCI 1 AUTH FOR 1-50 EQUIP	EA	
88	1	PBDDD	4920-00-115-1079	51547	LTCT4817	FIXTURE,TEST,DIFFUS...... BCI 1 AUTH FOR 1-50 EQUIP	EA	
88	2	PBDZZ	5330-00-168-5581	51547	LTCT4538	.PACKING,PREFORMED......	EA	
88	3	PADZZ	4920-00-010-0409	11599	STC63519	FIXTURE,ALIGNMENT,M...... BCI 1 AUTH FOR 1-50 EQUIP	EA	
88	4	PBDZZ	4920-00-010-7327	11599	STC62526	FIXTURE,SIMULATOR...... BCI 1 AUTH FOR 1-50 EQUIP	EA	
88	5	PBDZZ	4920-00-556-2171	51547	LTCT456	ARBOR,BALANCING DIS......F71 BCI 1 AUTH FOR 1-50 EQUIP	EA	

(1) ILLUSTRATION (a) FIG NO	(b) ITEM NO	(2) SMR CODE	(3) NATIONAL STOCK NUMBER	(4) FSCM	(5) PART NUMBER	(6) DESCRIPTION USABLE ON CODE	(7) U/M	(8) QTY INC IN UNIT
F8	6	PBDZZ	4520-00-115-1636	51547	LTCT11181	RING ASSY,WELC REPA....F76,F77 BCI 1 AUTH FOR 1-50 EQUIP	EA	
F8	7	PBDZZ	4520-00-115-1637	51547	LTCT11222	FIXTURE,MACHINING,A....F76 BCI 1 AUTH FOR 1-50 EQUIP	EA	
F8	8	PBDZZ	4520-00-583-4637	51547	LTCT11132	FIXTURE,TEST,VAPORI....F76,F77 BCI 1 AUTH FOR 1-50 EQUIP	EA	
F8	9	PBDZZ	4520-00-583-4638	51547	LTCT11C72	FIXTURE,ALIGNMENT,V....F76,F77 BCI 1 AUTH FOR 1-50 EQUIP	EA	
F8	10	PADZZ	4520-00-010-0404	11599	STC63671	BLOCK,SURFACE BEARING ASSEMBLY.... BCI 1 AUTH FOR 1-50 EQUIP	EA	
F8	11	PADZZ	4520-00-557-4000	11599	STC62556	ADAPTER,TORQUE OVERSPEED GOVERNOR.... BCI 1 AUTH FOR 1-25 EQUIP	EA	
F8	12	PBDZZ	4520-00-108-0034	51547	LTCT11176	FIXTURE,LOCATING....F76,F77 BCI 1 AUTH FOR 1-50 EQUIP	EA	
F9	1	PADZZ	4520-00-876-8173	51547	LTC14504	FIXTURE,HOLDING,ACC.... BCI 1 AUTH FOR 1-50 EQUIP	EA	
F9	2	PAFZZ	4520-00-756-9485	51547	LTC1780	FIXTURE,ASSEMBLING....F76,F77 BCI 1 AUTH FOR 1-50 EQUIP	EA	
F9	3	PADZZ	4520-00-010-0425	11599	STC64555	FIXTURE ASSY,SELECT.... BCI 1 AUTH FOR 1-50 EQUIP	EA	
F9	4	PADZZ	5120-00-575-5645	11599	STC64555	FIXTURE,DRILL ASSEMBLY.... BCI 1 AUTH FOR 1-50 EQUIP	EA	
F9	5	PBFZZ	5120-00-511-3303	51547	LTC12083	TOOL,INSTALLING FLA....F76,F77 BCI 1 AUTH FOR 1-50 EQUIP	EA	
F9	6	PADZZ	4520-00-010-0437	11599	STC64566	FIXTURE,LAPPING,VAL.... BCI 1 AUTH FOR 1-50 EQUIP	EA	
F9	7	PBDZZ	4520-00-115-1634	51547	LTCT11106	FIXTURE,ALIGNMENT,C....F76,F77 BCI 1 AUTH FOR 1-50 EQUIP	EA	
F10	1	PBDZZ	5210-00-220-2085	11599	STC67004	INDICATOR,DIAL.... BCI 1 AUTH FOR 1-50 EQUIP	EA	
F10	2	PADZZ	5120-00-576-2231	11599	STC63455	WRENCH.... BCI 1 AUTH FOR 1-50 EQUIP	EA	
F10	3	PBDZZ	5120-00-826-3100	51547	LTC13706	DRIVER,BEARING AND.... BCI 1 AUTH FOR 1-50 EQUIP	EA	
F10	4	XBDZZ	4520-00-076-9053	11599	STC64556	FIXTURE,LOADING COV.... BCI 1 AUTH FOR 1-50 EQUIP	EA	
F10	5	PBDZZ	4520-00-102-8842	51547	LTCT11C23	FIXTURE,HOLDING,FLA....F76,F77 BCI 1 AUTH FOR 1-50 EQUIP	EA	
F10	6	PBDZZ	4520-00-102-8843	51547	LTC16204	FIXTURE,ASSEMBLING....F76,F77 BCI 1 AUTH FOR 1-50 EQUIP	EA	
F10	6	PBDZZ	4520-00-103-5445	51547	LTC16300	FIXTURE,ASSEMBLING....F76,F77 BCI 1 AUTH FOR 1-50 EQUIP	EA	

(1) ILLUSTRATION (a) FIG NO	(b) ITEM NO	(2) SMR CODE	(3) NATIONAL STOCK NUMBER	(4) FSCM	(5) PART NUMBER	(6) DESCRIPTION USABLE ON CODE	(7) U/M	(8) QTY INC IN UNIT
F10	6	PBDZZ	4920-00-103-5467	51547	LTCT6254	FIXTURE,ASSEMBLING.........F76,F77 BCI 1 AUTH FOR 1-50 EQUIP	EA	
F10	6	PBDDD	4920-00-103-5468	51547	LTCT6256	FIXTURE,ASSEMBLING,.........F76,F77 BCI 1 AUTH FOR 1-50 EQUIP	EA	
F10	6	PBDZZ	4920-00-102-6644	51547	LTCT6253	FIXTURE,ASSEMBLING,.........F76,F77 BCI 1 AUTH FOR 1-50 EQUIP	EA	
F11	1	PBDZZ	4920-00-554-8561	51547	LTCT10522-01	CONTROL,WATERBRAKE......... BCI 1 AUTH FOR 1-50 EQUIP	EA	
F11	2	PBFZZ	5180-00-841-0324	51547	LTCT4675	REMOVAL KIT,ALT ANC U/W LTCT4522.........F76,F77 BCI 1 AUTH FOR 1-50 EQUIP	EA	
F11	2	PAFZZ	5180-00-851-1461	51547	LTCT4676	TOOL KIT,AIRCRAFT.........F71 BCI 1 AUTH FOR 1-50 EQUIP	EA	
F11	3	PBDDD	4920-00-525-8451	51547	LTCT4029	ADAPTER,BEARING SET......... BCI 1 AUTH FOR 1-50 EQUIP	EA	
F11	3	XBDDD	4920-00-525-8453	51547	LTCT4028	ADAPTER,BEARING SET.........F71 BCI 1 AUTH FOR 1-50 EQUIP	EA	
F11	3	PBDZZ	4920-00-550-2535	51547	LTCT2712-13	ADAPTER,BEARING SLE.........F76,F77 BCI 1 AUTH FOR 1-50 EQUIP	EA	
F11	3	PBDZZ	4920-00-550-1355	51547	LTCT2712-02	ADAPTER,BEARING,SLE.........F76,F77 BCI 1 AUTH FOR 1-50 EQUIP	EA	
F11	3	PBDZZ	4920-00-550-1536	51547	LTCT2712-16	ADAPTER,BEARING,SLE.........F76,F77 BCI 1 AUTH FOR 1-50 EQUIP	EA	
F11	3	PBDZZ	3120-00-527-3616	51547	LTCT2712-03	BEARING,ARBOR ASSEM.........F71 BCI 1 AUTH FOR 1-50 EQUIP	EA	
F11	3	XBDZZ	4920-00-550-2553	51547	LTCT2712-12	ADAPTER,BEARING SLE.........F76,F77 BCI 1 AUTH FOR 1-50 EQUIP	EA	
F11	3	PBDZZ	3120-00-838-5415	51547	LTCT2712-27	BEARING,SLEEVE.........F71 BCI 1 AUTH FOR 1-50 EQUIP	EA	
F11	3	PBDZZ	3120-00-838-5404	51547	LTCT2712-28	BEARING,SLEEVE.........F71 BCI 1 AUTH FOR 1-50 EQUIP	EA	
F11	3	PBDZZ	3120-00-400-2764	51547	LTCT2712-39	BEARING,SLEEVE.........F71 BCI 1 AUTH FOR 1-50 EQUIP	EA	
F11	3	XBDZZ	3120-00-435-2425	51547	LTCT2712-40	BEARING,SLEEVE.........F71 BCI 1 AUTH FOR 1-50 EQUIP	EA	
F11	4	XBDZZ	5120-00-845-2555	51547	LTCT4006-02	.ADAPTER,BEARING HCL.........	EA	
F11	4	XBDZZ	5120-00-845-2550	51547	LTCT4006-03	.ADAPTER,BEARING HCL.........	EA	
F11	5	PADZZ	5120-00-552-7217	51547	LTCT4012	DRIVER,BEARING REMO......... BCI 1 AUTH FOR 1-50 EQUIP	EA	
F11	6	PBFZZ	5120-00-138-4553	51547	LTCT13073	PULLER,MECHANICAL.........F71 BCI 1 AUTH FOR 1-50 EQUIP	EA	
F11	7	PBDZZ	4920-00-555-0030	51547	LTCT855	FIXTURE,TEST,VALVE......... BCI 1 AUTH FOR 1-50 EQUIP	EA	
F11	8	PBDZZ	4920-00-138-1230	11599	5TC62532	FIXTURE,ASSEMBLING,......... BCI 1 AUTH FOR 1-50 EQUIP	EA	
F11	9	XCDZZ	4920-00-138-1231	51547	LTCT11114	FIXTURE,HOLDER,BANC.........F76,F77 BCI 1 AUTH FOR 1-50 EQUIP	EA	

(1) ILLUSTRATION (a) FIG NO.	(b) ITEM NO.	(2) SMR CODE	(3) NATIONAL STOCK NUMBER	(4) FSCM	(5) PART NUMBER	(6) DESCRIPTION USABLE ON CODE	(7) U/M	(8) QTY INC IN UNIT
F11	10	PBDZZ	4920-00-228-1687	51547	LTC13623	FIXTURE,TEST,PRESSU....................F26,F27 BCI 1 AUTH FOR 1-50 EQUIP	EA	
F12	1	PBDZZ	4920-00-527-4430	11599	STD65622	COVER,PASSAGE MAIN.................... BCI 1 AUTH FOR 1-50 EQUIP	EA	
F12	2	PAFZZ	4920-00-522-2773	51547	LTC12C75	FIXTURE,HOLDING,SUN.................... BCI 1 AUTH FOR 1-50 EQUIP	EA	
F12	3	PADZZ	5120-00-523-3558	51547	LTC12086	DRIVER PLUG,BEARING PUSHING STEEL,W/O HANDLE, W/C DRIVER COLLAR.................... BCI 1 AUTH FOR 1-50 EQUIP	EA	
F12	4	PADZZ	4920-00-546-2188	51547	LTC13C40	FIXTURE,HOLDING CAR ASSEMBLY.................... BCI 1 AUTH FOR 1-50 EQUIP	EA	
F12	5	PACZZ	4940-00-546-2155	51547	LTC14C18	FIXTURE ASSEMBLY HC.................... BCI 1 AUTH FOR 1-50 EQUIP	EA	
F12	6	PBDZZ	4920-00-527-4459	11599	STD65688	FIXTURE,HOLDING,CAP.................... BCI 1 AUTH FOR 1-50 EQUIP	EA	
F12	7	PBDZZ	4920-00-527-4448	11599	STD65695	FIXTURE,INDICATING....................F26,F27 BCI 1 AUTH FOR 1-50 EQUIP	EA	
F12	8	PBDZZ	4920-00-527-4455	11599	STD65846	FIXTURE,DRILLING,HO.................... BCI 1 AUTH FOR 1-50 EQUIP	EA	
F12	9	PBDZZ	4920-00-527-4457	11599	STD65700	FIXTURE,HOLDING,LIN.................... BCI 1 AUTH FOR 1-50 EQUIP	EA	
F13	1	PADZZ	4920-00-546-4860	51547	LTC14C19	RING ASSEMBLY.................... BCI 1 AUTH FOR 1-50 EQUIP	EA	
F13	2	XDDZZ	4920-00-853-8434	51547	LTC14856	FIXTURE,TEST,NOZZLE....................F26,F27 BCI 1 AUTH FOR 1-50 EQUIP	EA	
F13	3	PADZZ	4920-00-523-43C1	11599	STD64365	FIXTURE,HOLDING,PAI.................... BCI 1 AUTH FOR 1-50 EQUIP	EA	
F13	4	PBFZZ	5120-00-523-3414	51547	LTC1562	PLATE,LOCKING,POWER....................F26 BCI 1 AUTH FOR 1-50 EQUIP	EA	
F13	5	PBDZZ	5120-00-523-3425	51547	LTC1511	SUPPORT,ADAPTER.................... BCI 1 AUTH FOR 1-50 EQUIP	EA	
F13	6	PAFZZ	5120-00-555-3435	51547	LTC11430	HANDLING TOOL,DETEN.................... BCI 1 AUTH FOR 1-50 EQUIP	EA	
F13	7	PADZZ	4920-00-523-43C4	11599	STD65C43	FIXTURE,HOLDING,VAL.................... BCI 1 AUTH FOR 1-50 EQUIP	EA	
F13	8	XBDZZ		51547	LTC11024	SHIELD,MASKING....................F26,F27 BCI 1 AUTH FOR 1-50 EQUIP	EA	
F13	9	XBDZZ	4920-00-850-7766	51547	LTC11C06	FIXTURE,HOLDING,PLA....................F26,F27 BCI 1 AUTH FOR 1-50 EQUIP	EA	
F13	10	PADZZ	4920-00-523-43C6	11599	STD653C3	FIXTURE,CONCENTRICI.................... BCI 1 AUTH FOR 1-50 EQUIP	EA	
F13	11	PBDZZ	4920-00-527-4456	11599	STD656C8	FIXTURE,POSITIONING.................... BCI 1 AUTH FOR 1-50 EQUIP	EA	

(1) ILLUSTRATION (a) FIG NO.	(b) ITEM NO	(2) SMR CODE	(3) NATIONAL STOCK NUMBER	(4) FSCM	(5) PART NUMBER	(6) DESCRIPTION USABLE ON CODE	(7) U/M	(8) QTY INC IN UNIT
F14	1	PADZZ	5120-00-523-3431	51547	LTCT2073	PULLER,MECHANICAL............ BCI 1 AUTH FOR 1-50 EQUIP	EA	
F14	2	PBDZZ	4920-00-402-8424	51547	LTCT13031	FIXTURE,HOLDING,MAI............ BCI 1 AUTH FOR 1-50 EQUIP	EA	
F14	3	PADZZ	5120-00-523-3445	51547	LTCT2080	SOCKET,WRENCH,FACE............ BCI 1 AUTH FOR 1-50 EQUIP	EA	
F14	4	PBFZZ	4920-00-106-0049	51547	LTCT3665	ADAPTER,HOISTING CO............ BCI 1 AUTH FOR 1-50 EQUIP	EA	
F14	5	PADZZ	5120-00-523-3454	51547	LTCT2142X	PULLER,MECHANICAL............ BCI 1 AUTH FOR 1-50 EQUIP	EA	
F14	6	PBDZZ	4920-00-517-5515	51547	LTCT2147-01	WRENCH AND BASE ASS............F76,F77 BCI 1 AUTH FOR 1-50 EQUIP	EA	
F14	7	PBDZZ	5120-00-062-0107	51547	LTCT718	FORCING SCREW,SPECI............ BCI 1 AUTH FOR 1-50 EQUIP	EA	
F14	8	PBFZZ	5120-00-509-2565	51547	LTCT1218	PULLER,MECHANICAL TOOL DOWEL,COMPRESSOR HOUSING............ BCI 1 AUTH FOR 1-50 EQUIP	EA	
F14	9	PBDZZ	5210-00-570-5775	C5C58	555-130-3	CALIPER,MICROMETER,............F71 BCI 1 AUTH FOR 1-50 EQUIP	EA	
F15	1	PBFZZ	5120-00-523-3423	51547	LTCT651	PULLER,MECHANICAL............F71 BCI 1 AUTH FOR 1-50 EQUIP	EA	
F15	2	PADZZ	5120-00-523-3445	51547	LTCT656	SOCKET,WRENCH,FACE............ BCI 1 AUTH FOR 1-50 EQUIP	EA	
F15	2	PBFZZ	5120-00-523-3433	51547	LTCT515	SOCKET,WRENCH,FACE............F71 BCI 1 AUTH FOR 1-50 EQUIP	EA	
F15	2	PBDZZ	5120-00-523-3443	51547	LTCT2079	SOCKET,WRENCH,FACE............ BCI 1 AUTH FOR 1-50 EQUIP	EA	
F15	2	PAFZZ	5120-00-618-5302	51547	LTCT222	SOCKET,WRENCH,FACE 8 PRONGS,0.370 IN.W,5192 DRIVE,2.255 IN.OD............F76,F77 BCI 1 AUTH FOR 1-50 EQUIP	EA	
F15	2	PBFZZ	5120-00-168-2166	51547	LTCT4797	SOCKET,WRENCH,NUT............F76,F77 BCI 1 AUTH FOR 1-50 EQUIP	EA	
F15	2	PADZZ	5120-00-552-7257	51547	LTCT2133	SOCKET,WRENCH,FACE............ BCI 1 AUTH FOR 1-50 EQUIP	EA	
F15	3	PADZZ	5120-00-523-3458	51547	LTCT752	PULLER,MECHANICAL............ BCI 1 AUTH FOR 1-50 EQUIP	EA	
F15	4	PBFZZ	5120-00-577-2151	51547	LTCT4680	PULLER,MECHANICAL............F71 BCI 1 AUTH FOR 1-50 EQUIP	EA	
F15	5	PBFZZ	5120-00-834-6714	51547	LTCT4846	PULLER,MECHANICAL............F71 BCI 1 AUTH FOR 1-50 EQUIP	EA	
F15	6	PBDZZ	4920-00-583-3355	51547	LTCT859	FLOW TEST RIG,START............F76,F77 BCI 1 AUTH FOR 1-50 EQUIP	EA	
F15	6	PBDZZ	5210-00-570-5776	C5C58	555-140-3	CALIPER,MICROMETER,............F71 BCI 1 AUTH FOR 1-50 EQUIP	EA	
F15	7	PBFZZ	5210-00-615-3647	53163	1240	CALIPER,MICROMETER,............F71 BCI 1 AUTH FOR 1-50 EQUIP	EA	

(1) ILLUSTRATION (a) FIG NO	(b) ITEM NO	(2) SMR CODE	(3) NATIONAL STOCK NUMBER	(4) FSCM	(5) PART NUMBER	(6) DESCRIPTION USABLE ON CODE	(7) U/M	(8) QTY INC IN UNIT
F16	1	PBDZZ	5220-CO-E45-435C	51547	LTC13486	CACE,CACKLASH.. ECI 1 AUTH FOR 1-5O EQUIP	EA	
E16	2	PBFZZ	4520-CO-E42-EE4C	51547	LTC1465C	CRANK,HAND.. ECI 1 AUTH FOR 1-5C EQUIP	EA	
F16	3	PBFZZ	5340-CO-EEC-7677	51547	LTC13555	BRACKET,CCUBLE ANGL.. ECI 1 AUTH FOR 1-5C EQUIP	EA	
F16	4	PBDZZ	4520-CO-E41-C1EE	51547	LTC13C38	FIXTURE,ASSEMBLING,.......................................F71 ECI 1 AUTH FOR 1-5C EQUIP	EA	
F16	5	PBDZZ	4520-CO-532-5151	11555	STD6251C	CCVER,TEST,MAIN HCU... ECI 1 AUTH FOR 1-5C EQUIP	EA	
F16	6	PBFLL	6685-CO-235-4553	5E865	BH7434F40	PRCBE ASSEMBLY,THER.......................................F71 ECI 1 AUTH FCP 1-5C EQUIP	EA	
F16	7	PBDZZ	4520-CC-C1C-7353	11555	STC656C7	FIXTURF,HCLDING,CCV... ECI 1 AUTH FOR 1-5O EQUIP	EA	
F16	8	PBDZZ	5120-CO-E16-7C51	51547	LTC1713	TEST FIXTURE,SU...F77 ECI 1 AUTH FOR 1-5C EQUIP	EA	
F16	9	PBDZZ	4520-CO-5E3-7544	51547	LTC14455	FIXTURE,TEST,NOZZLE.......................................F76,F77 ECI 1 AUTH FOR 1-5C EQUIP	EA	
E16	10	PBFLL	6685-00-235-4554	5E865	BH7434L4C	PRCBE ASSEMBLY,THER.......................................F71 ECI 1 AUTH FOR 1-5C EQUIP	EA	
F17	1	PBDZZ	4520-CO-01C-7355	11555	STC62536	FIXTURF,ALIGNMENT,S... ECI 1 AUTH FOR 1-5C EQUIP	EA	
E17	2	PFDZZ	4520-CO-C1C-C427	11555	STC64564	FIXTURF,LEAK TEST... ECI 1 AUTH FOR 1-5C EQUIP	EA	
F17	3	PADZZ	4520-CO-EE3-3E32	51547	LTC1123	CRACLE ASSEMBLY,TUR... ECI 1 AUTH FOR 1-5C EQUIP	EA	
F17	4	PBFZZ	5120-CO-EC4-2E25	51547	LTC12C21	PULLER KIT,MECHANIC... ECI 1 AUTH FCP 1-5C EQUIP	EA	
F17	5	PBDZZ	4520-CC-C34-5F75	51547	LTC13654	FIXTURF,TEST,PRESSU... ECI 1 AUTH FOR 1-5C EQUIP	EA	
F17	6	PADZZ	4520-CO-512-1171	11555	STC64527	FIXTURF,HCLDING,LEV... ECI 1 AUTH FOR 1-5C EQUIP	EA	
F17	7	PBDZZ	4520-CO-8CE-535C	51547	LTC1E646	FIXTURE,INSTALLATIC.......................................F71 ECI 1 AUTH FOR 1-5C EQUIP	EA	
F17	7	PBDZZ	4520-CC-ECE-5345	51547	LTC1E645	FIXTURF,INSTALLATIC.......................................F71 ECI 1 AUTH FOR 1-5C EQUIP	EA	
F18	1	PBDZZ		51547	LTC1733	PULLER,MECHANICAL...F76,F77 ECI 1 AUTH FOR 1-5C EQUIP	EA	

(1) ILLUSTRATION (a) FIG NO	(b) ITEM NO	(2) SMR CODE	(3) NATIONAL STOCK NUMBER	(4) FSCM	(5) PART NUMBER	(6) DESCRIPTION USABLE ON CODE	(7) U/M	(8) QTY INC IN UNIT
F18	2	XCDZZ	6685-00-904-2437	51547	LTC19C43-31	THERMOCOUPLE, IMMERS.. BCI 1 AUTH FOR 1-50 EQUIP	EA	
F18	3	PBDZZ	4920-00-808-5344	51547	LTC16644	FIXTURE, INSTALLATIC..............................F26,F27 BCI 1 AUTH FOR 1-50 EQUIP	EA	
F18	4	PBFZZ	5120-00-927-1288	51547	LTC14081	ADAPTER, TORQUE WREN..............................F26,F27 BCI 1 AUTH FOR 1-50 EQUIP	EA	
F19	1	PFDZZ	4920-00-010-0428	11599	STD64573	FIXTURE, ASSEMBLY.. BCI 1 AUTH FOR 1-50 EQUIP	EA	
F19	2	PADZZ	5120-00-114-5435	51547	LTC1142	PULLER, MECHANICAL.. BCI 1 AUTH FOR 1-50 EQUIP	EA	
F19	3	PBFZZ	5120-00-834-6712	51547	LTC14809	PULLER, MECHANICAL..............................FZL BCI 1 AUTH FOR 1-50 EQUIP	EA	
F19	4	PBDZZ	4920-00-842-8278	51547	LTC14807	FIXTURE, TEST, OIL SP..............................F71 BCI 1 AUTH FOR 1-50 EQUIP	EA	
F19	5	PBDZZ	4920-00-841-0419	51547	LTC14750	RETRACTOR ASSEMBLY..............................FZL BCI 1 AUTH FOR 1-50 EQUIP	EA	
F19	6	XBDZZ	4920-00-808-5330	51547	LTC16615	FIXTURE, PIN INSTALL..............................F26,F27 BCI 1 AUTH FOR 1-50 EQUIP	EA	
F20	1	PBFZZ	5120-00-671-2129	51547	LTC1153	BAR, LOCATING.. BCI 1 AUTH FOR 1-50 EQUIP	EA	
F20	2	PADZZ	5120-00-975-7534	11599	STD64577	PULLER, MECHANICAL.. BCI 1 AUTH FOR 1-50 EQUIP	EA	
F20	3	PBDZZ	5120-00-851-1339	51547	LTC14658	PULLER, INSTALLATION..............................FZL BCI 1 AUTH FOR 1-50 EQUIP	EA	
F20	4	PADZZ	4920-00-010-0429	11599	STD64572	PLUG, DUST, SEAL.. BCI 1 AUTH FOR 1-50 EQUIP	EA	
F20	5	PADZZ	5120-00-975-5451	11599	STD64576	WRENCH VALVE ASSEMBLY.. BCI 1 AUTH FOR 1-50 EQUIP	EA	
F20	6	PBDZZ	5120-00-671-4022	51547	LTC12027	PULLER, MECHANICAL.. BCI 1 AUTH FOR 1-50 EQUIP	EA	
F20	7	PBFZZ	4920-00-965-0020	51547	LTC14692	TOOL, REMOVAL..............................FZL BCI 1 AUTH FOR 1-50 EQUIP	EA	
F20	8	PBDZZ	5120-00-835-6513	51547	LTC14670	PULLER, MECHANICAL.. BCI 1 AUTH FOR 1-50 EQUIP	EA	
F20	9	PADZZ	5120-00-975-5453	11599	STD64567	PULLER, MECHANICAL.. BCI 1 AUTH FOR 1-50 EQUIP	EA	
F21	1	PADZZ	5120-00-757-4910	51547	LTC12028	PULLER, MECHANICAL GEAR.. BCI 1 AUTH FOR 1-50 EQUIP	EA	

SECTION III

(1) ILLUSTRATION (a) FIG NO	(b) ITEM NO	(2) SMR CODE	(3) NATIONAL STOCK NUMBER	(4) FSCM	(5) PART NUMBER	(6) DESCRIPTION USABLE ON CODE	(7) U/M	(8) QTY INC IN UNIT
F21	2	PFDZZ	5120-00-514-5501	11599	STD65332	PUNCH,DRIVE PIN POINT,0.2455 IN.DIA POINT.................... BOI 1 AUTH FOR 1-50 EQUIP	EA	
F21	3	PADZZ	4920-00-876-6118	51547	LTCT168	CRADLE,COMPRESSOR,R....................F76,F77 BOI 1 AUTH FOR 1-50 EQUIP	EA	
F21	4	PBDZZ	4920-00-842-6126	51547	LTCT4564	FLAG,BACKLASH GEAR.................... BOI 1 AUTH FOR 1-50 EQUIP	EA	
F21	5	PBFZZ	5120-00-834-6711	51547	LTCT4571	ARBOR,SHAFT,COMPRESS....................F71 BOI 1 AUTH FOR 1-50 EQUIP	EA	
F21	6	PBFZZ	4920-00-985-0024	51547	LTCT4568	PULLER,FORWARD SEAL....................F71 BOI 1 AUTH FOR 1-50 EQUIP	EA	
F21	7	PBFZZ	4920-00-842-6130	51547	LTCT4576	TOOL,INSTALLING,GEA....................F71 BOI 1 AUTH FOR 1-50 EQUIP	EA	
F22	1	PBFZZ	5120-00-701-1291	11599	STD63557	PULLER,MECHANICAL.................... BOI 1 AUTH FOR 1-50 EQUIP	EA	
F22	2	PBDZZ	4920-00-835-0710	51547	LTCT4558	ADAPTER,HOISTING CO.................... BOI 1 AUTH FOR 1-50 EQUIP	EA	
F22	3	PBDZZ	5120-00-988-8852	51547	LTCT4560	ALIGNMENT TOOL,GEAR.................... BOI 1 AUTH FOR 1-50 EQUIP	EA	
F22	4	PADZZ	5120-00-735-5252	11599	STD64567	PULLER,MECHANICAL.................... BOI 1 AUTH FOR 1-50 EQUIP	EA	
F22	5	PADZZ	4920-00-010-0409	11599	STD63558	ADAPTER,PASSAGE,OVE.................... BOI 1 AUTH FOR 1-50 EQUIP	EA	
F22	6	PBFZZ	4920-00-983-7514	51547	LTCT4553	FIXTURE,HOLDING,TUR....................F71 BOI 1 AUTH FOR 1-50 EQUIP	EA	
F22	7	PBDZZ	4920-00-842-6021	51547	LTCT4547	STRAIGHTENING TOOL,.................... BOI 1 AUTH FOR 1-50 EQUIP	EA	
F22	7	PBFZZ	4920-00-842-6022	51547	LTCT2119	STRAIGHTENING TOOL,.................... BOI 1 AUTH FOR 1-50 EQUIP	EA	
F22	7	PBFZZ	5120-00-845-3584	51547	LTCT2118	TAMPER,HAND.................... BOI 1 AUTH FOR 1-50 EQUIP	EA	
F23	1	PBDZZ	4920-00-842-6116	51547	LTCT4014	ARBOR,BALANCING,TUR.................... BOI 1 AUTH FOR 1-50 EQUIP	EA	
F23	2	PADZZ	4920-00-864-3466	51547	LTCT157	SEPARATOR TOOL,COMP.................... BOI 1 AUTH FOR 1-50 EQUIP	EA	
F23	3	PAFZZ	5220-00-906-3926	51547	LTCT2099	GAGE,BACKLASH.................... BOI 1 AUTH FOR 1-50 EQUIP	EA	
F23	4	PADZZ	4920-00-816-6838	51547	LTCT207	FIXTURE,TEST,GEAR B.................... BOI 1 AUTH FOR 1-50 EQUIP	EA	

(1) ILLUSTRATION (a) FIG NO.	(b) ITEM NO.	(2) SMR CODE	(3) NATIONAL STOCK NUMBER	(4) FSCM	(5) PART NUMBER	(6) DESCRIPTION USABLE ON CODE	(7) U/M	(8) QTY INC IN UNIT
F24	1	PBDZZ	4920-00-866-0877	51547	LTCT11358	FLANGE,FIXTURE,NOZZ........F26,F27 BOI 1 AUTH FOR 1-50 EQUIP	EA	
F24	2	PBDZZ	5120-00-851-3120	51547	LTCT2161	WRENCH,SPANNER NUT........ BOI 1 AUTH FOR 1-50 EQUIP	EA	
F24	3	PADZZ	4920-00-816-4856	51547	LTCT216	FIXTURE,TEST,FILTER........ BOI 1 AUTH FOR 1-50 EQUIP	EA	
F24	4	PBDZZ	4920-00-851-1266	51547	LTCT4153	FIXTURE,HOLDING,HCU........F21 BOI 1 AUTH FOR 1-50 EQUIP	EA	
F24	5	PBFZZ	4920-00-583-7380	51547	LTCT4179	INSTALLING TOOL,BLA........ BOI 1 AUTH FOR 1-50 EQUIP	EA	
F24	6	PBFZZ	4920-00-554-1125	51547	LTCT4182	ADAPTER,HOISTING,RE........ BOI 1 AUTH FOR 1-50 EQUIP	EA	
F24	7	PBFZZ	5120-00-840-5830	51547	LTCT4155	HANDLING TOOL,CYLIN........F21 BOI 1 AUTH FOR 1-50 EQUIP	EA	
F24	8	PBFZZ	4920-00-025-5074	51547	LTCT6740	REMOVAL TOOL,FIN........ BOI 1 AUTH FOR 1-50 EQUIP	EA	
F25	1	PBDDD	3442-00-785-5014	51547	LTCT550	PRESS,HYDRAULIC,VER........F26,F27 BOI 1 AUTH FOR 1-50 EQUIP	EA	
F25	2	XBDZZ	4920-00-485-8446	51547	LTCT2558	.ADAPTER,HYDRAULIC........F27,F21	EA	
F25	3	PBDZZ	4920-00-841-0270	51547	LTCT4078	FIXTURE,HOLDING,ROT........ BOI 1 AUTH FOR 1-50 EQUIP	EA	
F25	4	PBDZZ	4920-00-816-6848	51547	LTCT231	PULLER,BEARING........ BOI 1 AUTH FOR 1-50 EQUIP	EA	
F25	5	PBDZZ	5120-00-585-0038	51547	LTCT2159	PULLER,MECHANICAL........ BOI 1 AUTH FOR 1-50 EQUIP	EA	
F25	6	XBDZZ	4920-00-583-7508	51547	LTCT2149	FIXTURE,HOLDING,WAT........ BOI 1 AUTH FOR 1-50 EQUIP	EA	
F25	7	PBFZZ	4920-00-883-1661	51547	LTCT3581	CRIMPING TOOL,LOCKI........F21 BOI 1 AUTH FOR 1-50 EQUIP	EA	
F25	8	PBDZZ	4920-00-085-2340	51547	LTCT6073	STAND,MAINTENANCE,A........ BOI 1 AUTH FOR 1-50 EQUIP	EA	
F25	9	PBFZZ	5120-00-585-0017	51547	LTCT2121	PULLER,MECHANICAL........F21 BOI 1 AUTH FOR 1-50 EQUIP	EA	
F26	1	PBFZZ	5120-00-834-6713	51547	LTCT4842	PULLER,MECHANICAL........F21 BOI 1 AUTH FOR 1-50 EQUIP	EA	
F26	2	PADZZ	4920-00-816-6660	51547	LTCT236	FIXTURE,TEST,PRESSU........ BOI 1 AUTH FOR 1-50 EQUIP	EA	
F26	3	PAFZZ	4920-00-778-2304	51547	LTCT248	FIXTURE,HOLDING,POW........F26,F27 BOI 1 AUTH FOR 1-50 EQUIP	EA	
F26	4	PAFZZ	4920-00-505-4204	51547	LTCT692	FIXTURE,ALIGNING,AN........F26 BOI 1 AUTH FOR 1-50 EQUIP	EA	
F26	5	PBDZZ	4920-00-842-6038	51547	LTCT2123	COLLET ASSEMBLY,TES........F21 BOI 1 AUTH FOR 1-50 EQUIP	EA	

SECTION III

(1) ILLUSTRATION		(2)	(3)	(4)	(5)	(6)	(7)	(8)
(a) FIG NO	(b) ITEM NO	SMR CODE	NATIONAL STOCK NUMBER	FSCM	PART NUMBER	DESCRIPTION USABLE ON CODE	U/M	QTY INC IN UNIT
F26	5	PBDZZ	4920-00-517-7101	51547	LTCT2129	ARBOR ASSY,BALANCIN..........F71 BCI 1 AUTH FOR 1-50 EQUIP	EA	
F26	6	PBDZZ	5220-00-481-3109	51547	LTCT11336	CAGE,SPECIAL CLEARA..........F76,F77 BCI 1 AUTH FOR 1-50 EQUIP	EA	
F26	7	PBFZZ	3415-00-134-8128	51547	LTCT11209	FIXTURE,GRIND AND C..........F71 BCI 1 AUTH FOR 1-50 EQUIP	EA	
F27	1	PBDZZ	5120-00-517-7116	51547	LTCT4020	WRENCH ASSEMBLY,NUT.......... BCI 1 AUTH FOR 1-50 EQUIP	EA	
F27	2	PBDZZ	4920-00-841-0277	51547	LTCT499	SHROUD,BALANCE,TURB.......... BCI 1 AUTH FOR 1-50 EQUIP	EA	
F27	3	PADZZ	4920-00-864-3464	51547	LTCT251	FIXTURE,HOLDING,ROT.......... BCI 1 AUTH FOR 1-50 EQUIP	EA	
F27	4	PAFZZ	4920-00-816-6871	51547	LTCT256	TOOL,INSTALLING,PIN.......... BCI 1 AUTH FOR 1-50 EQUIP	EA	
F27	5	PBDZZ	5120-00-517-9917	51547	LTCT2158-01	PULLER,MECHANICAL.......... BCI 1 AUTH FOR 1-50 EQUIP	EA	
F27	6	PBDZZ	4920-00-011-8940	51547	LTCT456	FIXTURE,HOLDING..........F77,F71 BCI 1 AUTH FOR 1-50 EQUIP	EA	
F27	7	PBDZZ	4920-00-865-8022	51547	LTCT3906	ADAPTER,MANIFOLD..........F76,F77 BCI 1 AUTH FOR 1-50 EQUIP	EA	
F28	1	PAFZZ	5120-00-778-0661	51547	LTCT258	DRIVER,WRENCH.......... BCI 1 AUTH FOR 1-50 EQUIP	EA	
F28	2	PBDZZ	4920-00-866-1077	51547	LTCT11356	FIXTURE,NOZZLE ASSE..........F76,F77 BCI 1 AUTH FOR 1-50 EQUIP	EA	
F28	3	PBDZZ	4920-00-001-9343	51547	LTCT11366	FIXTURE,HOLDING,NOZ..........F71 BCI 1 AUTH FOR 1-50 EQUIP	EA	
F28	4	PADZZ	4920-00-906-9755	51547	LTCT2067	PULLER,SEAL.......... BCI 1 AUTH FOR 1-50 EQUIP	EA	
F28	5	PBFZZ	4920-00-226-1665	51547	LTCT6756	MOUNT,PICKUP,VIBRAT..........F71 BCI 1 AUTH FOR 1-50 EQUIP	EA	
F28	6	XBDZZ	4920-00-816-6884	51547	LTCT264	FIXTURE,TEST,CARRIE..........F76,F77 BCI 1 AUTH FOR 1-50 EQUIP	EA	
F28	7	PBDDD	4920-00-878-5209	51547	LTCT3963	INLET GUIDE VANE PC..........F71 BCI 1 AUTH FOR 1-50 EQUIP	EA	
F28	8	PBDZZ	4920-00-451-7108	51547	LTCT13846	.CABLE ASSEMBLY,SPEC..........F71	EA	
F28	9	PBDZZ	4920-00-878-5207	51547	LTCT4535	FIXTURE,OILPRESSURE..........F71 BCI 1 AUTH FOR 1-50 EQUIP	EA	

(1) ILLUSTRATION (a) FIG NO	(b) ITEM NO	(2) SMR CODE	(3) NATIONAL STOCK NUMBER	(4) FSCM	(5) PART NUMBER	(6) DESCRIPTION USABLE ON CODE	(7) U/M	(8) QTY INC IN UNIT
5	1	PAFZZ	5120-00-853-2520	51547	LTC1722	INSULATION TOOL,SEA..........FZ6,FZ7 BOI 1 AUTH FOR 1-50 EQUIP	EA	
5	2	PBFZZ	5210-00-228-8821	51547	LTC16124	MEASURING TOOL,BEVE..........FZ1 BOI 1 AUTH FOR 1-50 EQUIP	EA	
5	2	PBDZZ	5120-00-067-8331	51547	LTC13654	INSTALLATION AND RE.......... BOI 1 AUTH FOR 1-50 EQUIP	EA	
5	3	PADZZ	5120-00-506-8858	51547	LTC12044	HOLDING FIXTURE.......... BOI 1 AUTH FOR 1-50 EQUIP	EA	
5	4	PBDZZ	4520-00-818-6508	51547	LTC1283	FIXTURE,HOLDING..........FZ6,FZ7 BOI 1 AUTH FOR 1-50 EQUIP	EA	
5	5	PADZZ	4920-00-818-6513	51547	LTC1287	PULLER,BEARING..........FZ6,FZ7 BOI 1 AUTH FOR 1-50 EQUIP	EA	
5	6	PBFZZ	4520-00-070-1162	51547	LTC14547	INSTALLATION TOOL,B..........FZ1 BOI 1 AUTH FOR 1-50 EQUIP	EA	
25	7	PADZZ	5120-00-552-7216	51547	LTC12566	BASE,DRIVER,BEARING.......... BOI 1 AUTH FOR 1-50 EQUIP	EA	
25	7	PBFZZ	3120-00-071-8260	51547	LTC13452	BUSHING,SLEEVE..........FZ1 BOI 1 AUTH FOR 1-50 EQUIP	EA	
25	7	PBDZZ	3120-00-067-8320	51547	LTC13640	BUSHING,SLEEVE.......... BOI 1 AUTH FOR 1-50 EQUIP	EA	
25	7	PBFZZ	3120-00-071-8264	51547	LTC13494	BUSHING,SLEEVE..........FZ1 BOI 1 AUTH FOR 1-50 EQUIP	EA	
25	7	PBDZZ	3120-00-067-8321	51547	LTC13637	BUSHING,SLEEVE.......... BOI 1 AUTH FOR 1-50 EQUIP	EA	
25	7	PBFZZ	4520-00-851-8372	51547	LTC14602	GUIDE,RETAINER GEAR.......... BOI 1 AUTH FOR 1-50 EQUIP	EA	
25	7	PBDZZ	3120-00-067-8324	51547	LTC13658	BUSHING,SLEEVE.......... BOI 1 AUTH FOR 1-50 EQUIP	EA	
25	7	PBFZZ	3120-00-071-8263	51547	LTC13453	BUSHING,SLEEVE..........FZ1 BOI 1 AUTH FOR 1-50 EQUIP	EA	
25	7	PBDZZ	3120-00-067-8328	51547	LTC13660	BUSHING,SLEEVE.......... BOI 1 AUTH FOR 1-50 EQUIP	EA	
25	7	PBDZZ	3120-00-071-8261	51547	LTC13636	BUSHING,SLEEVE.......... BOI 1 AUTH FOR 1-50 EQUIP	EA	
25	7	PBDZZ	3120-00-067-8326	51547	LTC13659	BUSHING,SLEEVE.......... BOI 1 AUTH FOR 1-50 EQUIP	EA	
25	7	PBDZZ	3120-00-067-8325	51547	LTC13662	BUSHING,SLEEVE..........FZ1 BOI 1 AUTH FOR 1-50 EQUIP	EA	
25	7	PBDZZ	3120-00-067-8330	51547	LTC13661	BUSHING,SLEEVE.......... BOI 1 AUTH FOR 1-50 EQUIP	EA	
25	7	PBDZZ	3120-00-071-4565	51547	LTC13664	BUSHING,SLEEVE.......... BOI 1 AUTH FOR 1-50 EQUIP	EA	
25	7	PBDZZ	3120-00-071-4571	51547	LTC13663	BUSHING,SLEEVE.......... BOI 1 AUTH FOR 1-50 EQUIP	EA	
25	8	PBDZZ	4920-00-071-4555	51547	LTC13646	INSTALLATION TOOL,B.......... BOI 1 AUTH FOR 1-50 EQUIP	EA	
25	9	PBFZZ	4920-00-071-4553	51547	LTC13638	INSTALLATION TOOLS..........FZ7,FZ1 BOI 1 AUTH FOR 1-50 EQUIP	EA	

SECTION III

(1) ILLUSTRATION (a) FIG NO.	(1) ILLUSTRATION (b) ITEM NO	(2) SMR CODE	(3) NATIONAL STOCK NUMBER	(4) FSCM	(5) PART NUMBER	(6) DESCRIPTION USABLE ON CODE	(7) U/M	(8) QTY INC IN UNIT
F30	1	PADZZ	4520-00-886-1285	51547	LTCT257	HOLDING TOOL,REAR.....................................F74,F77 BOI 1 AUTH FOR 1-50 EQUIP	EA	
F30	2	PADZZ	4520-00-738-6757	11599	STD62483	FIXTURE,CONCENTRICI.. BOI 1 AUTH FOR 1-50 EQUIP	EA	
F30	3	PBDZZ	5130-00-736-5036	11599	STD65177	WRENCH ASSEMBLY.. BOI 1 AUTH FOR 1-50 EQUIP	EA	
F30	4	XBDZZ		11599	STD63465	GUIDE,REAMING,BEARI.. BOI 1 AUTH FOR 1-50 EQUIP	EA	
F30	5	PBDZZ	4520-00-650-5180	51547	LTCT6169	JIG,DRILL,GEARBOX.. BOI 1 AUTH FOR 1-50 EQUIP	EA	
F30	6	PBDZZ	4520-00-010-7328	11599	STD62528	COVER,PASSAGE BRIDG.. BOI 1 AUTH FOR 1-50 EQUIP	EA	
F30	7	PFDZZ	5136-00-736-5044	11599	STD65178	COLLET ASSEMBLY.. BOI 1 AUTH FOR 1-50 EQUIP	EA	
F30	8	PADZZ	4520-00-545-5507	11599	STD65582	POSITIONING PIN,FIX.....................................F74,F77 BOI 1 AUTH FOR 1-50 EQUIP	EA	
F30	9	PBFZZ	4520-00-557-4712	51547	LTCT3685	ADAPTER AND GUIDE A.....................................F71 BOI 1 AUTH FOR 1-50 EQUIP	EA	
F30	10	PBDZZ	5120-00-034-5884	51547	LTCT4007	PULLER ASSEMBLY,MFC.....................................F71 BOI 1 AUTH FOR 1-50 EQUIP	EA	
F30	11	PBDZZ	4520-00-034-5875	51547	LTCT4500	FIXTURE,TEST,OIL FL.. BOI 1 AUTH FOR 1-50 EQUIP	EA	
F30	12	PBFZZ	5136-00-843-6585	81348	GGG17C	TAP,THREAD CUTTING.....................................F74,F77 BOI 1 AUTH FOR 1-50 EQUIP	EA	
F30	13	PBDZZ	5136-00-643-4735	26232	HJ81	DIE AND TAP SET,THR.....................................F7L BOI 1 AUTH FOR 5-25 EQUIP	EA	
F31	1	PBDZZ	4520-00-078-2410	51547	LTCT13726	SWITCH AND COUPLING.....................................F7L BOI 1 AUTH FOR 5-25 EQUIP	EA	
F31	2	XBDZZ	4520-00-010-0458	51547	LTC1320	FIXTURE,ASSEMBLING,.....................................E74,F77 BOI 1 AUTH FOR 1-50 EQUIP	EA	
F31	3	XDDZZ	4520-00-523-4307	11599	STD63665	GUIDE,REAMER.....................................F7L BOI 1 AUTH FOR 1-50 EQUIP	EA	
F31	4	PADZZ	4520-00-738-6750	11599	STD62467	FIXTURE,HOLDING,VAL.. BOI 1 AUTH FOR 1-50 EQUIP	EA	
F31	5	PADZZ	4520-00-738-6751	11599	STD62469	FIXTURE,ALIGNMENT,V.. BOI 1 AUTH FOR 1-50 EQUIP	EA	
F31	6	PADZZ	4520-00-738-6754	11599	STD62470	FIXTURE,FLARING SOL.. BOI 1 AUTH FOR 1-50 EQUIP	EA	
F31	7	XBDZZ	4520-00-738-6755	11599	STD62473	FIXTURE,VALVE ASSEM.. BOI 1 AUTH FOR 1-50 EQUIP	EA	
F32	1	PADZZ	4520-00-065-0458	51547	LTCT321	FIXTURE,ALIGNMENT,B.....................................F74,F77 BOI 1 AUTH FOR 1-50 EQUIP	EA	

(1) ILLUSTRATION (a) FIG NO	(1) ILLUSTRATION (b) ITEM NO	(2) SMR CODE	(3) NATIONAL STOCK NUMBER	(4) FSCM	(5) PART NUMBER	(6) DESCRIPTION USABLE ON CODE	(7) U/M	(8) QTY INC IN UNIT
F32	2	PADZZ	4920-00-010-0459	51547	LTCT322	FIXTURE,ASSEMBLING.....................................F76,F77 BOI 1 AUTH FOR 1-50 EQUIP	EA	
F32	3	PADZZ	4920-00-012-4415	11599	STD64554	FIXTURE,BUSHING,BRI..................................... BOI 1 AUTH FOR 1-50 EQUIP	EA	
F33	1	PADZZ	5120-00-858-0657	51547	LTCT387	ALIGNMENT PIN..................................... BOI 1 AUTH FOR 1-50 EQUIP	EA	
F33	2	PBDZZ	4920-00-540-0346	51547	LTC11452	TEST UNIT,TEMPERATU..................................... BOI 1 AUTH FOR 1-50 EQUIP	EA	
F33	3	PFDZZ	4920-00-923-2558	11599	STD64568	FIXTURE,FOOT VALVE..................................... BOI 1 AUTH FOR 1-50 EQUIP	EA	
F33	4	PAFZZ	4920-00-831-5123	51547	LTC1179	THRUST BEARING REMO..................................... BOI 1 AUTH FOR 1-50 EQUIP	EA	
F33	5	PADZZ	4920-00-909-2559	51547	LTCT2048	PLATE,HOLDING,GEAR..................................... BOI 1 AUTH FOR 1-50 EQUIP	EA	
F33	6	PADZZ	5120-00-757-2933	51547	LTCT2016	PULLER,MECHANICAL.....................................F76,F77 BOI 1 AUTH FOR 1-50 EQUIP	EA	
F33	7	PAFZZ	4920-00-716-5466	51547	LTCT115	FIXTURE,HOLDING,GEA..................................... BOI 1 AUTH FOR 1-50 EQUIP	EA	
F33	8	PBDZZ	4920-00-717-7780	51547	LTC111067	FIXTURE,HOLDING,DIF.....................................F76,F77 BOI 1 AUTH FOR 1-50 EQUIP	EA	
F34	1	PAFZZ	5120-00-875-2588	51547	LTCT393	WRENCH,SOCKET..................................... BOI 1 AUTH FOR 1-50 EQUIP	EA	
F34	2	PBFZZ	4920-00-079-8816	51547	LTCT6000	INSTALLATION TOOL,A.....................................E7L BOI 1 AUTH FOR 1-50 EQUIP	EA	
F34	3	PADZZ	5120-00-716-5581	51547	LTCT108	INSTALLATION TOOL..................................... BOI 1 AUTH FOR 1-50 EQUIP	EA	
F34	4	PADZZ	5310-00-873-6028	11599	43611	WASHER,KEY..................................... BOI 1 AUTH FOR 1-50 EQUIP	EA	
F35	1	PBDZZ	5120-00-906-9754	51547	LTCT2018	PULLER,MECHANICAL.....................................F76,F77 BOI 1 AUTH FOR 1-50 EQUIP	EA	
F35	2	PADZZ	5120-00-019-6558	11599	STD65054	WRENCH,NUT,CRACKER..................................... BOI 1 AUTH FOR 1-50 EQUIP	EA	
F35	3	PBDZZ	5120-00-736-9038	11599	STD65073	WRENCH..................................... BOI 1 AUTH FOR 1-50 EQUIP	EA	
F35	4	PADZZ	5130-00-736-9045	11599	STD65321	WRENCH ASSEMBLY..................................... BOI 1 AUTH FOR 1-50 EQUIP	EA	
F35	5	PBDZZ	4920-00-859-6665	51547	LTCT4981	PROBE,PRESSURE..................................... BOI 1 AUTH FOR 1-50 EQUIP	EA	

(1) ILLUSTRATION		(2)	(3)	(4)	(5)	(6) DESCRIPTION	(7)	(8)
(a) FIG NO	(b) ITEM NO	SMR CODE	NATIONAL STOCK NUMBER	FSCM	PART NUMBER	USABLE ON CODE	U/M	QTY INC IN UNIT
F35	6	PBDZZ	4920-00-075-0025	51547	LTCT4719	FIXTURE,TEST,COMPRE.......... BCI 1 AUTH FOR 1-50 EQUIP	EA	
F35	7	PADZZ	5120-00-504-5745	51547	LTCT2068	PULLER,MECHANICAL..........F76,F77 BCI 1 AUTH FOR 1-50 EQUIP	EA	
F35	8	PBDZZ	5120-00-250-6655	55719	PC43C	COMPRESSOR,PISTL.......... BCI 1 AUTH FOR 1-50 EQUIP	EA	
F35	8	PBFZZ	5133-00-782-4231	83324	SR625C	DRILL,STEP.......... BCI 1 AUTH FOR 1-50 EQUIP	EA	
F35	9	PBFZZ	5133-00-177-7268	83324	RCADC28-312	COUNTERSINK.......... BCI 1 AUTH FOR 1-50 EQUIP	EA	
F35	9	PBFZZ	5133-00-177-7269	83324	RCADC38-484	COUNTERSINK.......... BCI 1 AUTH FOR 1-50 EQUIP	EA	
F36	1	PBDZZ	4920-00-010-0426	11599	STD64557	FIXTURE ASSY,FUEL C.......... BCI 1 AUTH FOR 1-50 EQUIP	EA	
F36	2	PBDZZ	4920-00-433-7553	51547	LTCT11278	PULLER,GUIDE VANE..........F76,F77 BCI 1 AUTH FOR 1-50 EQUIP	EA	
F36	3	PBDZZ	4920-00-176-8410	51547	LTCT11321	FIXTURE,TURBINE,NOZ..........F71 BCI 1 AUTH FOR 1-50 EQUIP	EA	
F36	4	XDDZZ	3465-00-134-8654	51547	LTCT11322	ELECTRODE,SHROUD..........F71 BCI 1 AUTH FOR 1-50 EQUIP	EA	
F36	5	XDDZZ	3465-00-134-8655	51547	LTCT11323	ELECTRODE,SHROUD..........F71 BCI 1 AUTH FOR 1-50 EQUIP	EA	
F36	6	PAFZZ	5120-00-083-2834	11599	STD62454	PULLER,MECHANICAL.......... BCI 1 AUTH FOR 1-50 EQUIP	EA	
F36	7	PFDZZ	4920-00-252-2726	51547	LTCT13345	PUNCH AND TABLE ASS..........F71 BCI 1 AUTH FOR 1-50 EQUIP	EA	
F36	7	PFDZZ	4920-00-252-2436	51547	LTCT13356	PUNCH AND TABLE ASS..........F71 BCI 1 AUTH FOR 1-50 EQUIP	EA	
F36	8	PBDZZ	4920-00-252-2727	51547	LTCT13367	PUNCH AND TABLE ASS..........F71 BCI 1 AUTH FOR 1-50 EQUIP	EA	
F36	9	XDDZZ	4920-00-444-2362	51547	LTCT13606	TESTER,SEAL LEAKAGE..........F71 BCI 1 AUTH FOR 1-50 EQUIP	EA	
F37	1	PADZZ	4920-00-083-0410	11599	STD64847	WRENCH,ADJUSTING,TE..........F76,F77 BCI 1 AUTH FOR 1-50 EQUIP	EA	
F37	2	PADZZ	5120-00-575-7515	11599	STD64864	PULLER,MECHANICAL.......... BCI 1 AUTH FOR 1-50 EQUIP	EA	
F37	3	PADZZ	4920-00-871-0226	51547	LTCT405	FIXTURE,TEST,FUEL C.......... BCI 1 AUTH FOR 1-50 EQUIP	EA	
F37	4	PAFZZ	4920-00-876-6550	51547	LTCT40	FIXTURE,HOLDING,FCW..........F76,F77 BCI 1 AUTH FOR 1-50 EQUIP	EA	
F37	5	PADZZ	4920-00-010-5522	11599	STD64677	FIXTURE,SHIPPING,GC.......... BCI 1 AUTH FOR 1-50 EQUIP	EA	

(1) ILLUSTRATION (a) FIG NO	(b) ITEM NO	(2) SMR CODE	(3) NATIONAL STOCK NUMBER	(4) FSCM	(5) PART NUMBER	(6) DESCRIPTION USABLE ON CODE	(7) U/M	(8) QTY INC IN UNIT
F37	6	PADZZ	4520-00-012-4422	11599	STC64534	MANDREL,BEARING LAP.................................F77,F71 BCI 1 AUTH FOR 1-50 EQUIP	EA	
F37	7	PADZZ	4520-00-010-0434	11599	STC64779	COVER,TEST TOPPING... BCI 1 AUTH FOR 1-50 EQUIP	EA	
F37	8	PADZZ	4520-00-010-0438	11599	STC64814	FIXTURE,SHIMMING,VA.. BCI 1 AUTH FOR 1-50 EQUIP	EA	
F37	9	PADZZ	5120-00-595-7536	11599	STC64829	PULLER,MECHANICAL.. BCI 1 AUTH FOR 1-50 EQUIP	EA	
F37	10	PADZZ	4520-00-010-5521	11599	STC64840	FIXTURE.. BCI 1 AUTH FOR 1-50 EQUIP	EA	
F37	11	PADZZ	4520-00-010-0439	11599	STC64841	COVER,STANDPIPE.. BCI 1 AUTH FOR 1-50 EQUIP	EA	
F38	1	PADZZ	4520-00-138-6623	11599	STC64578	FIXTURE,SHIPPING LE.. BCI 1 AUTH FOR 1-50 EQUIP	EA	
F38	2	PADZZ	4520-00-864-0464	51547	LTCT403	SCREEN ASSEMBLY,INL.. BCI 1 AUTH FOR 1-50 EQUIP	EA	
F38	3	PBDZZ	4520-00-863-3427	51547	LTCT404	STAND ASSEMBLY... BCI 1 AUTH FOR 1-50 EQUIP	EA	
F38	4	PADZZ	4520-00-515-1349	51547	LTC12057	PLATE,SPLIT.. BCI 1 AUTH FOR 1-50 EQUIP	EA	
F38	4	PADZZ	4520-00-515-1348	51547	LTC12058	PLATE,SPLIT.. BCI 1 AUTH FOR 1-50 EQUIP	EA	
F38	5	PADZZ	4520-00-871-0225	51547	LTCT406	PLUG ASSEMBLY,TEST.....................................E76,F77 BCI 1 AUTH FOR 1-50 EQUIP	EA	
F38	6	PADZZ	4520-00-138-6624	11599	STC64582	FIXTURE,TEST,VALVE... BCI 1 AUTH FOR 1-50 EQUIP	EA	
F38	7	PADZZ	4520-00-010-0431	11599	STC64550	ADAPTER,PRESSURE TA.. BCI 1 AUTH FOR 1-50 EQUIP	EA	
F38	8	PBDZZ	4520-00-010-1345	11599	STC62533	ADAPTER,TEST SCREEN.. BCI 1 AUTH FOR 1-50 EQUIP	EA	
F39	1	PBDZZ	4520-00-871-5132	51547	LTCT413	FIXTURE,TEST,FUEL I.. BCI 1 AUTH FOR 1-50 EQUIP	EA	
F39	2	PADZZ	4520-00-886-1266	51547	LTCT423	ADAPTER,PUMP... BCI 1 AUTH FOR 1-50 EQUIP	EA	
F39	3	PBFZZ	4520-00-113-5613	51547	LTC16763	STOP,FUEL CONTROL.. BCI 1 AUTH FOR 1-50 EQUIP	EA	
F39	4	PBDZZ	4520-00-864-0463	51547	LTCT407	FIXTURE,TEST,FUEL C.. BCI 1 AUTH FOR 1-50 EQUIP	EA	
F39	5	PBDZZ	4520-00-515-0159	51547	LTC12052	FIXTURE,TEST,TUBE,T.......................................F71 BCI 1 AUTH FOR 1-50 EQUIP	EA	
F39	6	PBDZZ	4520-00-508-1434	51547	LTCT4100	FIXTURE,TEST,VAPORI....................................E76,F77 BCI 1 AUTH FOR 1-50 EQUIP	EA	

(1) ILLUSTRATION (a) FIG NO.	(b) ITEM NO.	(2) SMR CODE	(3) NATIONAL STOCK NUMBER	(4) FSCM	(5) PART NUMBER	(6) DESCRIPTION USABLE ON CODE	(7) U/M	(8) QTY INC IN UNIT
F39	7	PADZZ	5120-00-786-4423	51547	LTCT675	PULLER,MECHANICAL.. BCI 1 AUTH FOR 1-50 EQUIP	EA	
F40	1	PBDZZ	5220-00-481-3114	51547	LTCT11338	GAGE,SPECIAL CLEARA......................................F7L BCI 1 AUTH FOR 1-50 EQUIP	EA	
F40	2	PBFZZ	5210-00-234-2881	55683	416153	GAGE,DEPTH,VERNIER.......................................F7L BCI 1 AUTH FOR 1-50 EQUIP	EA	
F40	3	PBFZZ	5120-00-433-7303	82324	F1110W	WRENCH INSERT.. BCI 1 AUTH FOR 1-50 EQUIP	EA	
F40	3	PBFZZ	5120-00-381-5126	76665	R1106W	WRENCH,INSERT AND.. BCI 1 AUTH FOR 1-50 EQUIP	EA	
F40	4	PBFZZ	5120-00-165-0124	82324	SR2544A	WRENCH,INSERT.. BCI 1 AUTH FOR 1-50 EQUIP	EA	
F40	5	PBFZZ	5133-00-116-2820	82324	RCAD47-562	DRILL,TWIST U/W R1110W R205C............................. BCI 1 AUTH FOR 1-50 EQUIP	EA	
F40	5	PBFZZ	5133-00-116-2800	82324	RCAD56-687	DRILL,TWIST U/W R1111W R1711C............................ BCI 1 AUTH FOR 1-50 EQUIP	EA	
F40	6	XBFZZ	5133-00-415-5680	82324	RZA12112FT	COUNTERBORE,MACHINE...................................... BCI 1 AUTH FOR 1-50 EQUIP	EA	
F40	7	PBFZZ	5133-00-116-2774	82324	RCADC56-6415	DRILL,TWIST U/W R1111W R210C............................. BCI 1 AUTH FOR 1-50 EQUIP	EA	
F41	1	PBFZZ	5120-00-473-7013	82324	R206C	DRIVER,BEARING AND....................................... BCI 1 AUTH FOR 1-50 EQUIP	EA	
F41	1	PBFZZ	5120-00-473-7015	82324	R208C	DRIVER,BEARING AND....................................... BCI 1 AUTH FOR 1-50 EQUIP	EA	
F41	1	XBFZZ	5120-00-473-7016	82324	R205C	DRIVER,BEARING AND....................................... BCI 1 AUTH FOR 1-50 EQUIP	EA	
F41	2	PBDZZ	4920-00-156-8702	51547	LTCT6722	ARBOR,BALANCING..F7L BCI 1 AUTH FOR 1-50 EQUIP	EA	
F41	3	PBDZZ	4920-00-156-8707	51547	LTCT6641	FIXTURE,HOLDING,ROT......................................F7L BCI 1 AUTH FOR 1-50 EQUIP	EA	
F41	4	PBFZZ	5120-00-133-5525	82324	SR4255A	SWAGING TOOL,INSERT...................................... BCI 1 AUTH FOR 1-50 EQUIP	EA	
F41	5	PBDZZ	5120-00-156-8471	51547	LTCT13003	PIN,GUIDE..F7L BCI 1 AUTH FOR 1-50 EQUIP	EA	
F41	6	PBDZZ	4920-00-403-7786	51547	LTCT11365	FIXTURE,SEAL LEAKAG..................................F2E,F7L BCI 1 AUTH FOR 1-50 EQUIP	EA	
F42	1	PADZZ	4920-00-515-0150	51547	LTCT2152	PLUNGER,DETENT... BCI 1 AUTH FOR 1-50 EQUIP	EA	

(1) ILLUSTRATION (a) FIG NO.	(b) ITEM NO.	(2) SMR CODE	(3) NATIONAL STOCK NUMBER	(4) FSCM	(5) PART NUMBER	(6) DESCRIPTION USABLE ON CODE	(7) U/M	(8) QTY INC IN UNIT
E42	1	PADZZ	4520-00-515-6052	51547	LTC12151	PLUNGER,DETENT...... BCI 1 AUTH FOR 1-50 EQUIP	EA	
E42	2	PADZZ	5120-00-552-7256	51547	LTC14051	STAKING TOOL,BOLT R...... BCI 1 AUTH FOR 1-50 EQUIP	EA	
E42	3	PADZZ	4520-00-010-0419	11599	STD64535	FIXTURE,TEST,TRAVEL...... BCI 1 AUTH FOR 1-50 EQUIP	EA	
E42	4	PAFZZ	4520-00-780-4357	51547	LTCT481	INSTALLATION TOOL,E NO.4 BEARING......EZ6,EZ7 BCI 1 AUTH FOR 1-50 EQUIP	EA	
E42	5	PADZZ	5120-00-780-4424	51547	LTCT483	PULLER,MECHANICAL...... BCI 1 AUTH FOR 1-50 EQUIP	EA	
E42	6	PBDZZ	4520-00-841-0276	51547	LTC14713	FIXTURE,HOLDING,EEA...... BCI 1 AUTH FOR 1-50 EQUIP	EA	
E42	7	PAFZZ	4520-00-780-4356	51547	LTCT482	FIXTURE,ASSEMBLING......EZ6,EZ7 BCI 1 AUTH FOR 1-50 EQUIP	EA	
E42	8	PADZZ	4520-00-010-0420	11599	STD64541	FIXTURE,FLOW TEST C...... BCI 1 AUTH FOR 1-50 EQUIP	EA	
E42	9	PADZZ	5120-00-575-7577	11599	STD64545	PULLER,MECHANICAL...... BCI 1 AUTH FOR 1-50 EQUIP	EA	
E42	10	PADZZ	5120-00-575-5746	11599	STD64546	PULLER,MECHANICAL...... BCI 1 AUTH FOR 1-50 EQUIP	EA	
E42	11	PADZZ	4520-00-010-0421	11599	STD64550	FIXTURE,TEST,TRAVEL...... BCI 1 AUTH FOR 1-50 EQUIP	EA	
E43	1	PADZZ	4520-00-010-0415	11599	STD64505	FIXTURE,SHIPPING,CO...... BCI 1 AUTH FOR 1-50 EQUIP	EA	
E43	2	PBFZZ	4520-00-419-5655	51547	LTCT13430	FIXTURE,TORQUE,NUT......EZ6,EZ7 BCI 1 AUTH FOR 1-50 EQUIP	EA	
E43	3	PBFZZ	4520-00-455-6552	51547	LTCT13175	FIXTURE,TORQUE WREN......EZL BCI 1 AUTH FOR 1-50 EQUIP	EA	
E43	4	PBFZZ	5120-00-405-5121	51547	LTCT6465	PULLER,MECHANICAL...... BCI 1 AUTH FOR 1-50 EQUIP	EA	
E43	5	PAFZZ	5120-00-778-0664	51547	LTCT503	ALIGNMENT TOOL,PUMP......EZ6,EZ7 BCI 1 AUTH FOR 1-50 EQUIP	EA	
E43	6	PBFZZ	5120-00-842-6361	51547	LTCT4895	PULLER,MECHANICAL......EZ6,EZ7 BCI 1 AUTH FOR 1-50 EQUIP	EA	
E43	7	PBFZZ	5120-00-473-7551	51547	LTCT506	SOCKET,WRENCH,FACE......EZ7,EZL BCI 1 AUTH FOR 1-50 EQUIP	EA	
E43	8	PADZZ	4520-00-738-6356	11599	STD62480	QUADRANT,POSITIONIN...... BCI 1 AUTH FOR 1-50 EQUIP	EA	
E43	9	PBFZZ	4520-00-085-2255	51547	LTCT4174	FIXTURE,ALIGNMENT......EZL BCI 1 AUTH FOR 1-50 EQUIP	EA	
E43	10	PADZZ	4520-00-010-0417	11599	STD64530	CLAMP,BELLOWS ASSEM...... BCI 1 AUTH FOR 1-50 EQUIP	EA	
E43	11	PBDZZ	4520-00-735-1455	11599	STD67131	FIXTURE,TEST,PUMP...... BCI 1 AUTH FOR 1-50 EQUIP	EA	
E43	12	PBDZZ	4520-00-575-6532	87641	SKE13852-1510	ADAPTER,ENGINE BASE......EZ7,EZL BCI 1 AUTH FOR 5-25 EQUIP	EA	

SECTION III

(1) ILLUSTRATION (a) FIG NO.	(b) ITEM NO	(2) SMR CODE	(3) NATIONAL STOCK NUMBER	(4) FSCM	(5) PART NUMBER	(6) DESCRIPTION USABLE ON CODE	(7) U/M	(8) QTY INC IN UNIT
E44	1	PAFZZ	5120-00-446-1566	51547	LTC1509	PULLER,MECHANICAL........ BCI 1 AUTH FOR 1-50 EQUIP	EA	
E44	2	PBDZZ	4920-00-762-2815	11599	STD62527	FIXTURE,TEST,CONTRO........ BCI 1 AUTH FOR 1-50 EQUIP	EA	
E44	3	XDFZZ	5120-00-034-1002	51547	LTC1515	BIT,SCREWDRIVER........ BCI 1 AUTH FOR 1-50 EQUIP	EA	
E44	4	PBDZZ	5120-00-878-7757	51547	LTC13511	REMOVER,PLUG........ BCI 1 AUTH FOR 1-50 EQUIP	EA	
E44	5	PADZZ	5210-00-780-4414	51547	LTC1551	GAGE BLOCK........F76,F77 BCI 1 AUTH FOR 1-50 EQUIP	EA	
E44	6	PADZZ	4920-00-010-0412	11599	STD64355	FIXTURE ASSEMBLY........ BCI 1 AUTH FOR 1-50 EQUIP	EA	
E44	7	PADZZ	4920-00-010-0435	11599	STD64503	FIXTURE,ALIGNMENT,F........ BCI 1 AUTH FOR 1-50 EQUIP	EA	
E44	8	PADZZ	4920-00-010-0414	11599	STD64504	FIXTURE,ASSEMBLING,........ BCI 1 AUTH FOR 1-50 EQUIP	EA	
E45	1	PADZZ	4920-00-010-5500	11599	STD63931	PULLER,VALVE........ BCI 1 AUTH FOR 1-50 EQUIP	EA	
E45	2	PADZZ	4920-00-909-1314	11599	STD62573	QUADRANT,TRAVEL TES........ BCI 1 AUTH FOR 1-50 EQUIP	EA	
E45	3	PADZZ	5120-00-557-7134	11599	STD64085	WRENCH,SPANNER........ BCI 1 AUTH FOR 1-50 EQUIP	EA	
E45	4	PADZZ	4920-00-945-5505	11599	STD62457	FIXTURE,HOLDING........ BCI 1 AUTH FOR 1-50 EQUIP	EA	
E46	1	PADZZ	4920-00-863-3830	51547	LTC155	FIXTURE,HOLDING,BCT........F76,F77 BCI 1 AUTH FOR 1-50 EQUIP	EA	
E46	2	XBDZZ	3460-00-785-5015	51547	LTC1556	ARBOR,GRINDING........F76,F77 BCI 1 AUTH FOR 1-50 EQUIP	EA	
E46	3	PADZZ	4920-00-557-4061	11599	STD63703	FIXTURE,ALIGNMENT,C........ BCI 1 AUTH FOR 1-50 EQUIP	EA	
E46	4	PAFZZ	5120-00-618-4554	51547	LTC157	WRENCH,SPANNER........F76,F77 BCI 1 AUTH FOR 1-50 EQUIP	EA	
E46	5	PAFZZ	4920-00-863-3837	51547	LTC158	FIXTURE,POWER TURBI........ BCI 1 AUTH FOR 1-50 EQUIP	EA	
E46	6	PFDZZ	5120-00-578-2272	11599	STD63704	ANVIL,STAKING........ BCI 1 AUTH FOR 1-50 EQUIP	EA	
E46	7	PFDZZ	5120-00-578-2273	11599	STD63705	WRENCH COMPUTER........ BCI 1 AUTH FOR 1-50 EQUIP	EA	
E46	8	PADZZ	5120-00-578-2274	11599	STD63743	PULLER,MECHANICAL........ BCI 1 AUTH FOR 1-50 EQUIP	EA	

(1) ILLUSTRATION (a) FIG NO	(b) ITEM NO	(2) SMR CODE	(3) NATIONAL STOCK NUMBER	(4) FSCM	(5) PART NUMBER	(6) DESCRIPTION USABLE ON CODE	(7) U/M	(8) QTY INC IN UNIT
F46	9	PBDZZ	4520-00-455-6146	11599	5TE67CE7	FIXTURE,HOLDING,PUM................................ BOI 1 AUTH FOR 1-50 EQUIP	EA	
F47	1	XDDZZ	4520-00-176-6420	51547	LTCT11315	FIXTURE,NOZZLE SUPP................................F7L BOI 1 AUTH FOR 1-50 EQUIP	EA	
F47	2	PADZZ	5315-00-735-5253	11599	5TE64CC6	PIN,SHOULDER,HEADLE................................ BOI 1 AUTH FOR 1-50 EQUIP	EA	
F47	3	XDFZZ	5120-00-555-7634	51547	LTC11429	HANDLING TOOL,DETEN................................ BOI 1 AUTH FOR 1-50 EQUIP	EA	
F47	4	PBFZZ	4520-00-714-1217	56665	BH43'2	CABLE ASSY,SPECIAL................................F7L BOI 1 AUTH FOR 1-50 EQUIP	EA	
F48	1	PBFZZ	4520-00-020-2667	51547	LTCT1255	ADAPTER,ENGINE,ROTA................................F77,F7L BOI 1 AUTH FOR 1-50 EQUIP	EA	
F48	2	PADZZ	5120-00-670-0432	51547	LTCT818	PULLER................................ BOI 1 AUTH FOR 1-50 EQUIP	EA	
F48	3	PADZZ	4520-00-757-4665	51547	LTCT865	STAND,MOUNTING PRES................................ BOI 1 AUTH FOR 1-50 EQUIP	EA	
F48	4	PADZZ	5220-00-522-2266	51547	LTCT716	GAGE BACKLASH................................ BOI 1 AUTH FOR 1-50 EQUIP	EA	
F48	5	PADZZ	4520-00-010-0408	11599	5TE63469	GUIDE,SEAL,COVER................................ BOI 1 AUTH FOR 1-50 EQUIP	EA	
F48	6	PADZZ	5120-00-578-2266	11599	5TE63453	PULLER,MECHANICAL................................ BOI 1 AUTH FOR 1-50 EQUIP	EA	
F48	7	PADZZ	5120-00-578-2267	11599	5TE63511	PIN,ALIGNMENT................................ BOI 1 AUTH FOR 1-50 EQUIP	EA	
F48	8	PADZZ	4520-00-010-0407	11599	5TE63468	DRIFT................................ BOI 1 AUTH FOR 1-50 EQUIP	EA	
F49	1	PBDDD	4920-00-587-5666	77820	11-4700-1	TEST SET,JET IGNITI................................ BOI 1 AUTH FOR 1-50 EQUIP	EA	
F49	2	XBDZZ		51547	LTCT5267	.ADAPTER,IGNITION................................	EA	
F49	3	XBDZZ		51547	LTCT5268	.ADAPTER,INPUT LEAD................................	EA	
F49	4	XBDZZ		51547	LTCT5276	.CABLE ASSEMBLY................................	EA	
F49	5	XBDZZ		51547	LTCT5273	.CABLE ASSEMBLY................................	EA	
F49	6	XBDZZ		51547	LTCT5275	.LEAD,TEST,IGNITION................................	EA	
F49	7	XBDZZ		51547	LTCT5271	.LEAD,TEST PROBE................................	EA	
F49	8	XBDZZ		51547	LTCT5270	.LEAD,TEST PROBE................................	EA	
F49	9	XBDZZ	4920-00-829-6166	51547	LTCT5272	.CABLE ASSEMBLY,POWE................................	EA	

SECTION III

(1) ILLUSTRATION (a) FIG NO	(b) ITEM NO	(2) SMR CODE	(3) NATIONAL STOCK NUMBER	(4) FSCM	(5) PART NUMBER	(6) DESCRIPTION USABLE ON CODE	(7) U/M	(8) QTY INC IN UNIT
F45	10	XBDZZ	4520-00-883-1632	51547	LTC15274	.LEAD,GROUND	EA	
F45	11	XBDZZ	4520-00-011-8510	51547	LTC15269	.ADAPTER,IGNITION TE	EA	
F45	12	XBDZZ	4520-00-011-8538	51547	LTC15277	.LEAD AND CONDUIT AS	EA	
F45	13	XADZZ		51547	LTC15379	.TESTER,IGNITION SYS	EA	
F45	14	XBDZZ		77820	11-4737	.ADAPTER,LEAD,ELECTR	EA	
F45	15	XBDZZ		77820	11-4739	.ADAPTER,INPUT LEAD	EA	
F45	16	XBDZZ		77820	11-4740	.ADAPTER,OUTPUT	EA	
F45	17	XBDZZ		77820	11-6021	.CABLE,POWER	EA	
F45	18	XBDZZ		77820	11-6085	.LEAD,CAP TESTING	EA	
F45	19	XBDZZ		77820	11-6086	.LEAD,OUTPUT,IGNITIO	EA	
F45	20	XBDZZ		77820	11-6105	.ADAPTER,LEAD	EA	
F45	21	XBDZZ		77820	11-6277	.ADAPTER,LEAD,ELECTR	EA	
F45	22	XBDZZ		77820	11-6527	.ADAPTER,LEAD,ELECTR	EA	
F45	23	XBDZZ		77820	11-6530	.ADAPTER,LEAD,ELECTR	EA	
F50	1	PBDZZ	5280-00-125-8099	51547	LTC16837	GAGE SET,ENGINE BCI 1 AUTH FOR 1-50 EQUIP	EA	
F51	1	XDFFF	4520-00-521-7076	51547	LTC12020	MAINTENANCE KIT,FLA FINISHING,FIRST STAGE TURBINE FOR INITIAL DISTRIBUTION ONLY, REQUISITION INDIVIDUAL COMPONENTS TO REPLENISH MAINTENANCE KIT BCI 1 AUTH FOR 1-50 EQUIP	EA	
F51	2	PBFZZ	5120-00-890-2760	51547	LTC14402-01	.WRENCH,SPANNER	EA	
F51	3	PBFZZ	5120-00-073-8321	51547	LTC14402-02	.WRENCH,SPANNER	EA	
F51	4	PBFZZ	4520-00-073-8508	51547	LTC14405	.SHAFT,MAINTENANCE K	EA	
F51	5	PBFZZ	3120-00-082-0425	51547	LTC14406	.BUSHING,SLEEVE	EA	
F51	6	PBFZZ	2840-00-448-5580	51547	LTC14408	.COVER,PROTECTIVE	EA	
F51	7	PBFZZ	5120-00-082-0408	51547	LTC14450	.SOCKET,WRENCH,FACE	EA	
F51	8	PBFZZ	5945-00-079-8822	51547	LTC15260	.RELAY,TIME DELAY ASSEMBLY	EA	
F51	9	PBFZZ	3455-00-543-2345	51547	LTC15261	.CUTTER,MILLING CARB	EA	
F51	10	PBFZZ	5920-00-555-5352	51547	LTC15262	.FUSE,CARTRIDGE	EA	
F51	11	PBFZZ	5120-00-888-1754	51547	LTC15263	.WRENCH,SPANNER	EA	
F51	12	PBFZZ	5360-00-452-3218	51547	LTC15356	.BUSHING,SLEEVE	EA	
F51	13	PBFZZ	5977-00-555-5484	51547	LTC15264	.BRUSH,ELECTRICAL CO	EA	
F51	14	PBFZZ	2940-00-524-3620	51547	LTC15266	.STRAINER ELEMENT,AI	EA	
F51	15	PAFZZ	5365-00-003-1165	51547	1-100-411-04	.RING,EXTERNALLY THR ... E76,E77	EA	
F51	16	PBFDD	4520-00-725-5870	51547	LTC12125	.MACHINE,FINISHING,F ... E77,E71	EA	

SECTION III

(1) ILLUSTRATION (a) FIG NO	(1) ILLUSTRATION (b) ITEM NO	(2) SMR CODE	(3) NATIONAL STOCK NUMBER	(4) FSCM	(5) PART NUMBER	(6) DESCRIPTION USABLE ON CODE	(7) U/M	(8) QTY INC IN UNIT
E51	17	PBFZZ	4920-00-079-8885	91547	LTCT4409,	.CABLE ASSEMBLY,SPEC	EA	
E52	1	PBDDD	4920-00-886-1286	91547	LTCT421	TEST STAND,COMPRESS BOI 1 AUTH FOR 1-50 EQUIP	EA	
E52		XBDZZ	4920-00-178-0829	91547	LTCT8704	.SUPPORT KIT,TEST BA SPARE PARTS LIST FOR LTCT421 EZ7	KT	
E52	2	PBDDA	4920-00-871-0222	91547	LTCT313	CHECK STAND,OIL FLO BOI 1 AUTH FOR 1-50 EQUIP	EA	
E52		PBDZZ	4920-00-178-0827	91547	LTCT8702	.SUPPORT KIT,TEST ST SPARE PARTS LIST FOR LTCT313 EZ7	KT	
E52	3	PBDDD	4920-00-886-1287	91547	LTCT422	TEST STAND,FUEL PUM METER BOI 1 AUTH FOR 1-50 EQUIP	EA	
E52		XBDZZ	4920-00-178-0828	91547	LTCT8705	.SUPPORT KIT,TEST BA SPARE PARTS LIST FOR LTCT422 EZ7	KT	
E52	4	PBDZZ	4920-00-808-5365	91547	LTCT6616	POWER ASSEMBLY,PIN BOI 1 AUTH FOR 1-50 EQUIP	EA	
E53	1	PBDDD	4920-00-842-6124	91547	LTCT4084	TESTER,PRESSURE,HOU BOI 1 AUTH FOR 1-50 EQUIP	EA	
E53	2	PBDZZ	4920-00-997-4713	91547	LTCT4816	.FIXTURE,PRESSURE TE EZL	EA	
E54	1	PBDZZ	4920-00-878-5598	91547	LTCT4726	REMOVAL KIT,TURBINE EZL BOI 1 AUTH FOR 1-50 EQUIP	EA	
E55	1	PBFZZ	4920-00-989-0018	91547	LTCT4172	ADAPTER KIT,FINISHI EZL BOI 1 AUTH FOR 1-50 EQUIP	EA	
E56	1	PBOZZ	1730-00-780-4406	91547	LTCT862	SHIELD,AIRCRAFT GRO SERVICING BOI 1 AUTH FOR 5-25 EQUIP	EA	
E56	2	PBOZZ	1730-00-903-5019	91547	LTCT773	SLING,AIRCRAFT MAIN BOI 1 AUTH FOR 5-25 EQUIP	EA	
E56	3	PBOZZ	5120-00-878-6153	91547	LTCT3938	WRENCH,BOX BOI 1 AUTH FOR 5-25 EQUIP	EA	
E56	4	PBOZZ	5120-00-034-6193	91547	LTCT4810	WRENCH,CROWFOOT ATT BOI 1 AUTH FOR 5-25 EQUIP	EA	

SECTION III

(1) ILLUSTRATION (a) FIG NO	(b) ITEM NO	(2) SMR CODE	(3) NATIONAL STOCK NUMBER	(4) FSCM	(5) PART NUMBER	(6) DESCRIPTION USABLE ON CODE	(7) U/M	(8) QTY INC IN UNIT
E56	5	PBOZZ	4920-00-854-4519	91547	LTCT270	TOOL,INSTALLING,SEA BOI 1 AUTH FOR 5-25 EQUIP	EA	
E56	5	PBOZZ	4920-00-776-7126	91547	LTCT100	INSALLATION TOOL,S BOI 1 AUTH FOR 5-25 EQUIP	EA	
E56	6	PBOZZ	4920-00-071-4556	91547	LTCT3648	PULLER,SEAL BOI 1 AUTH FOR 5-25 EQUIP	EA	
E56	7	PBOZZ	4920-00-491-0840	91547	LTCT511	INSTALLATION TOOL,S BOI 1 AUTH FOR 5-25 EQUIP	EA	
E56	8	XDOZZ	5120-00-446-1585	91547	LTCT501	TOOL,INSTALLATIO ... E27,EZL BOI 1 AUTH FOR 5-25 EQUIP	EA	
E56	9	PBFZZ	4920-01-020-1689	91547	LTCT14503	CLAMP,GAGE ... E27,EZL BOI 1 AUTH FOR 1-50 EQUIP	EA	
E56	10	PBDZZ	4920-01-020-1690	91547	LTCT14514	PUNCH,STAKING ... EZL BOI 1 AUTH FOR 1-50 EQUIP	EA	
E57	1	PBOZZ	2945-00-893-5601	94592	SPT107	CLEANER,OIL FILTER BOI 1 AUTH FOR 5-25 EQUIP	EA	

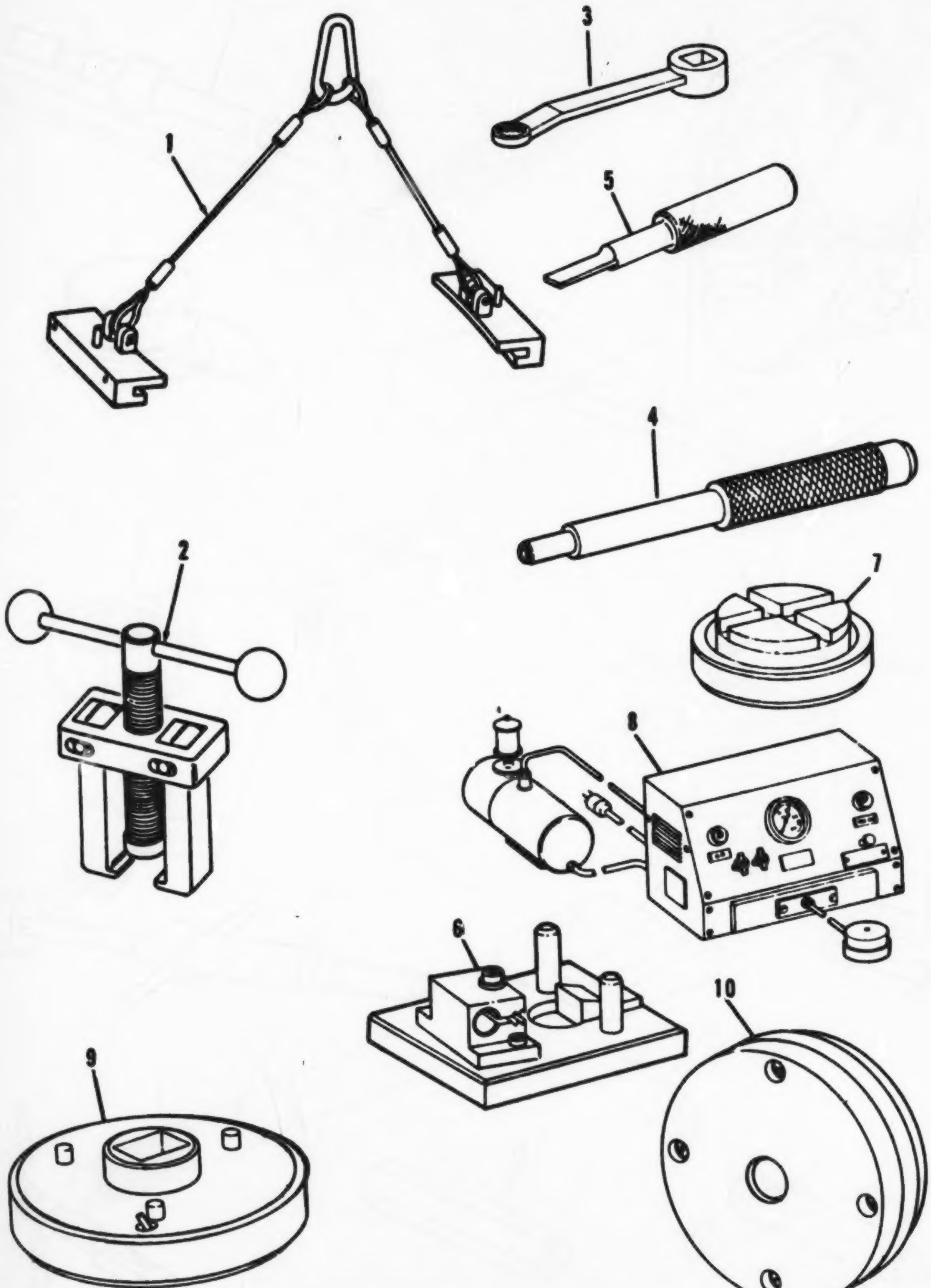

Figure E1. Engine Tools

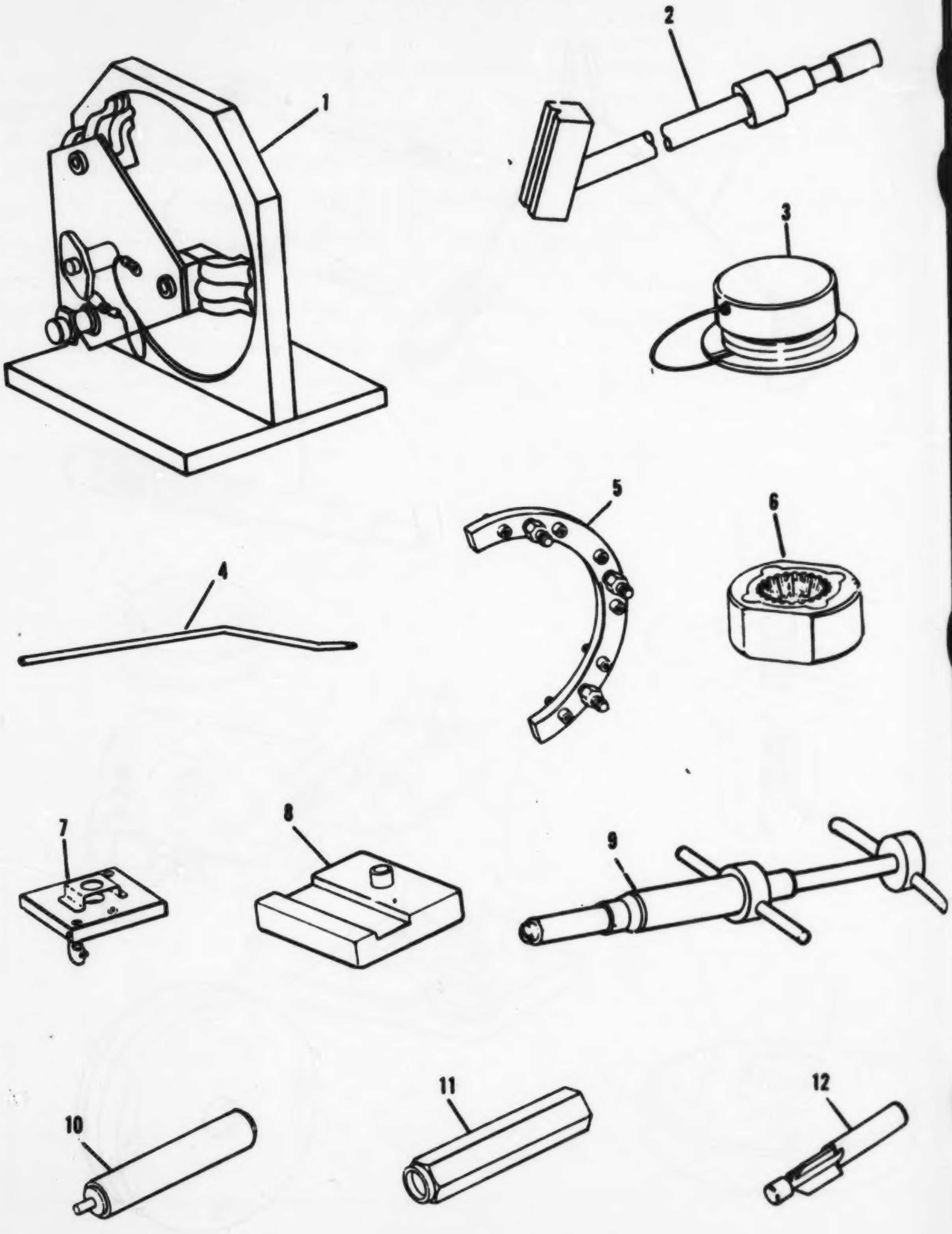

Figure E2. Engine Tools

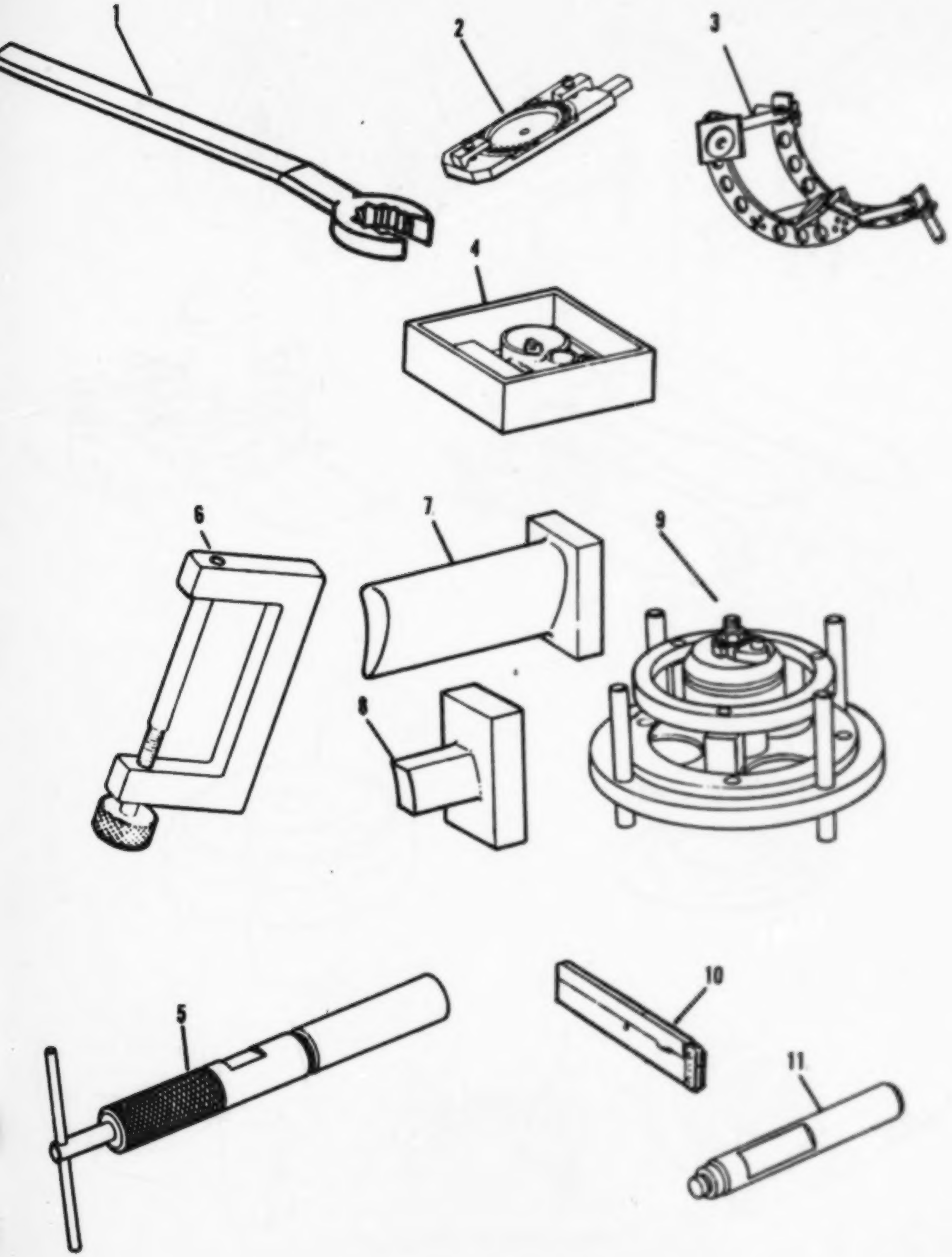

Figure E3. Engine Tools

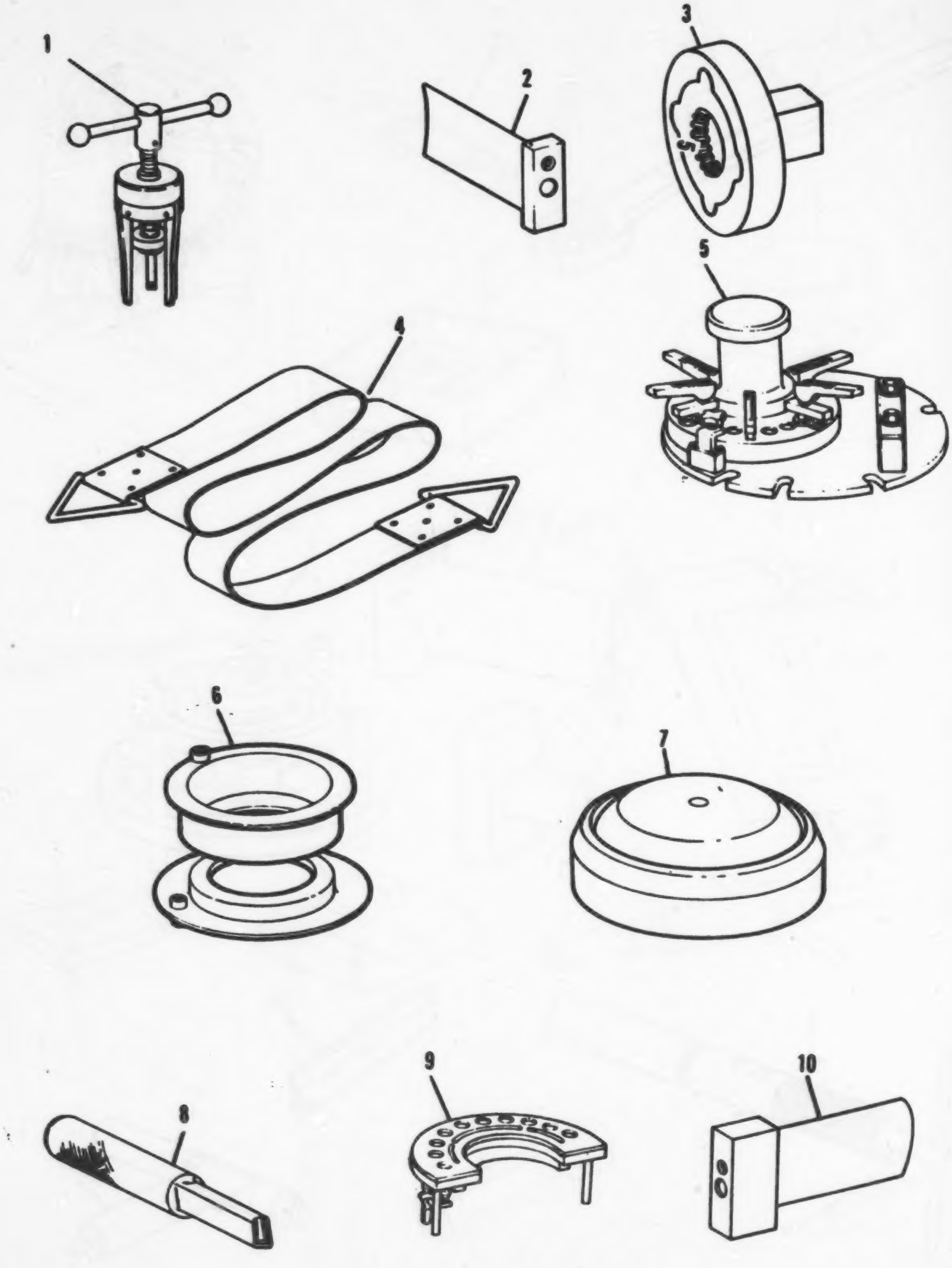

Figure E4. Engine Tools

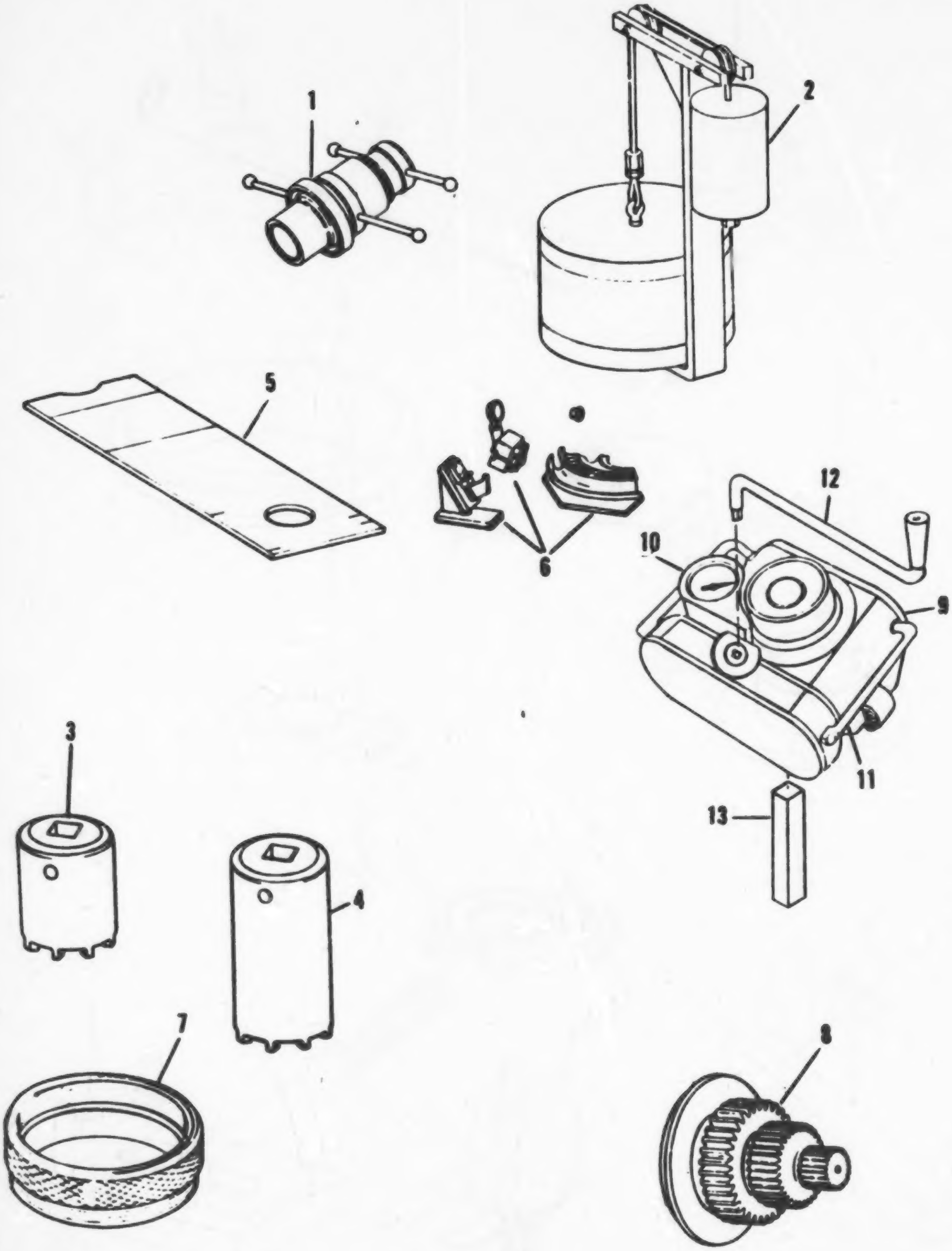

Figure E5. Engine Tools

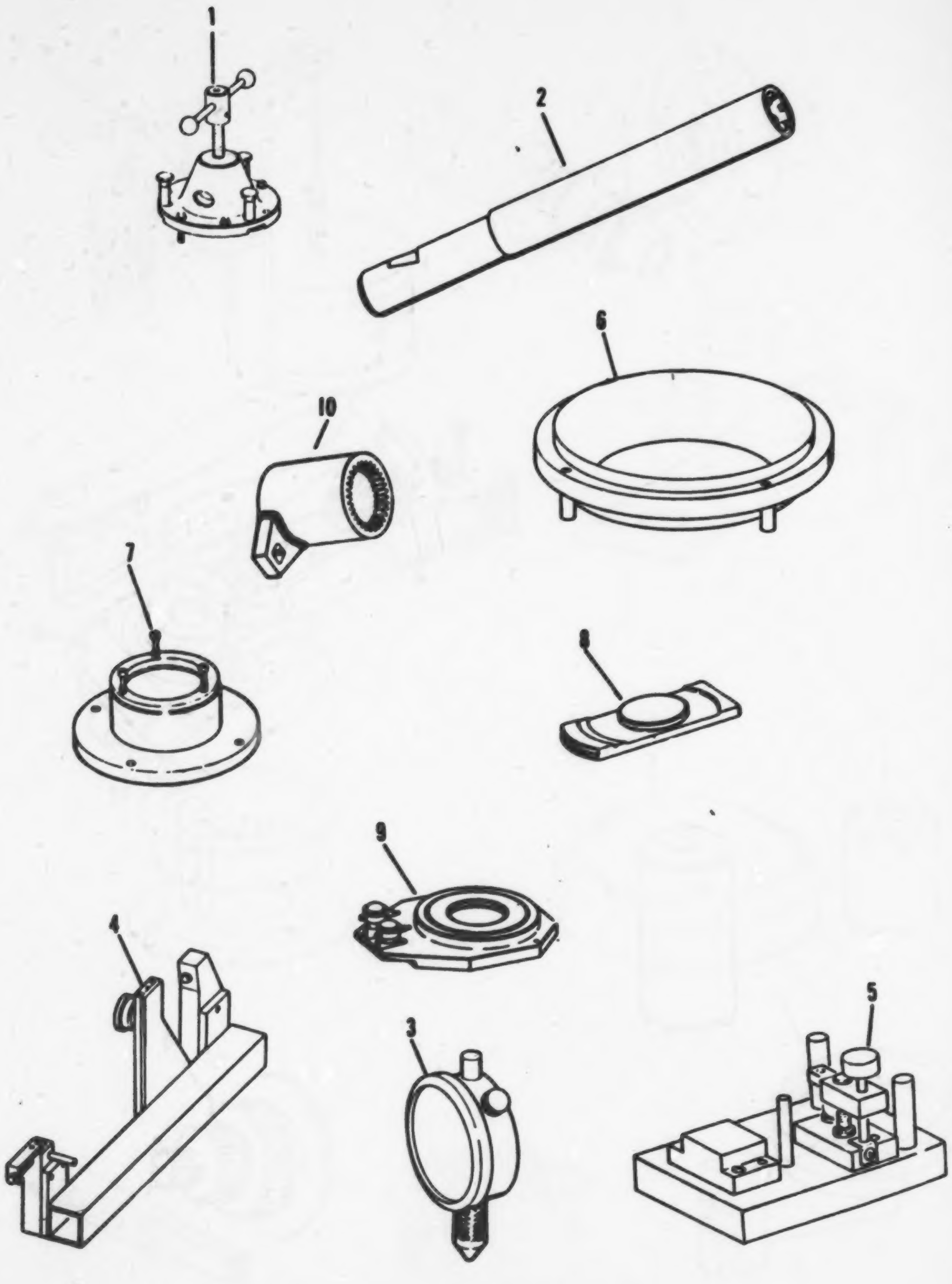

Figure E6. Engine Tools

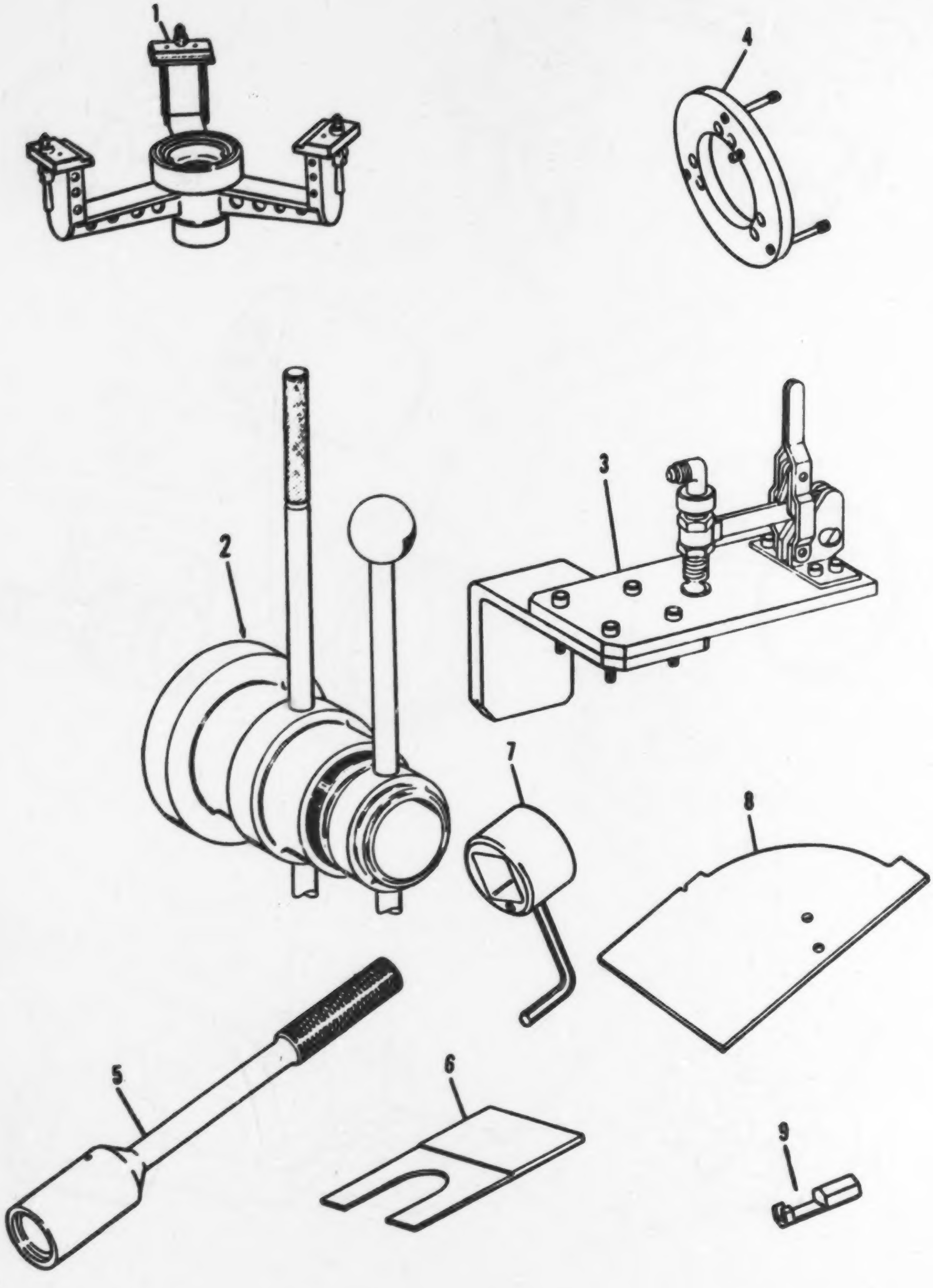

Figure E7. Engine Tools

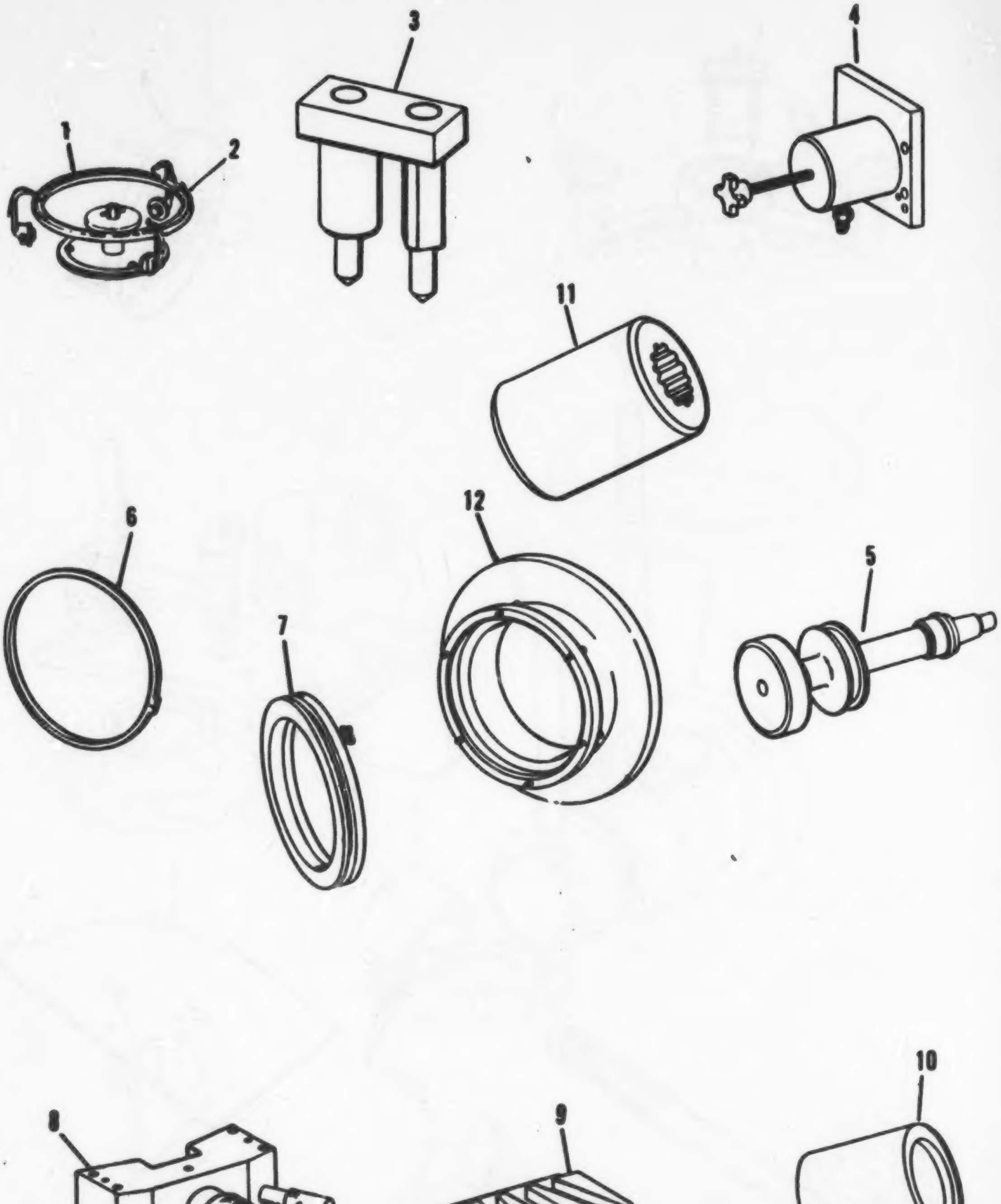

Figure E8. Engine Tools

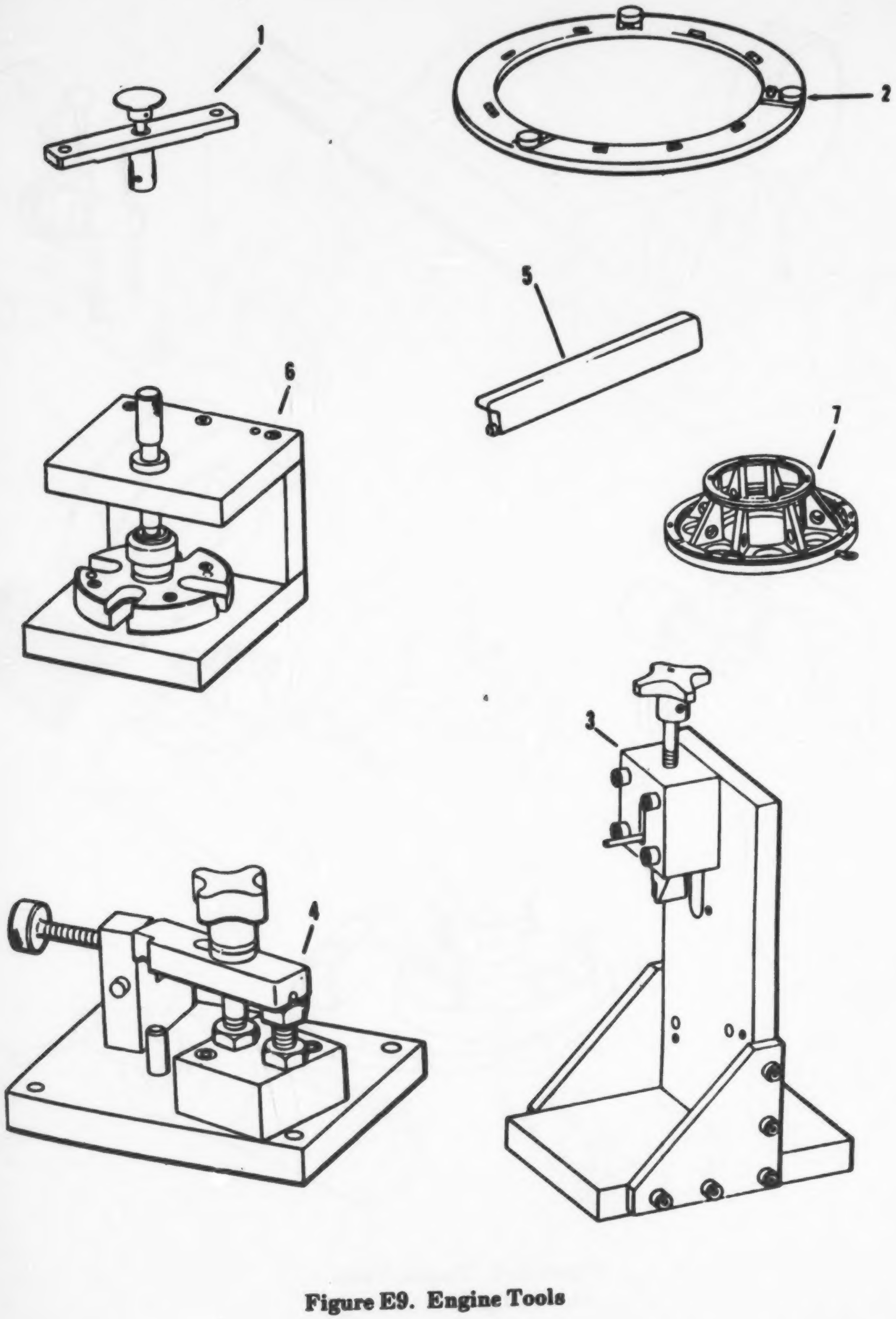

Figure E9. Engine Tools

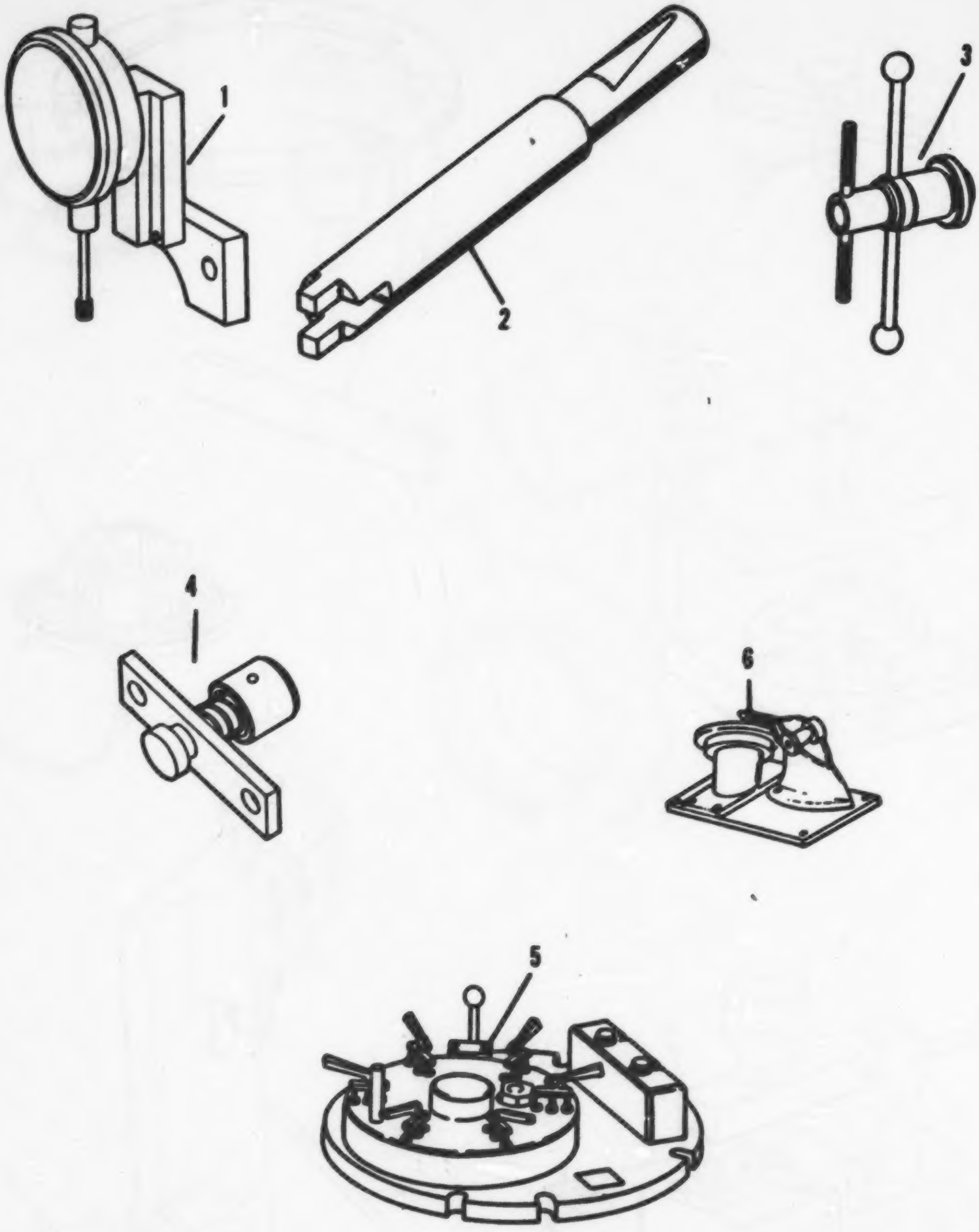

Figure E10. Engine Tools

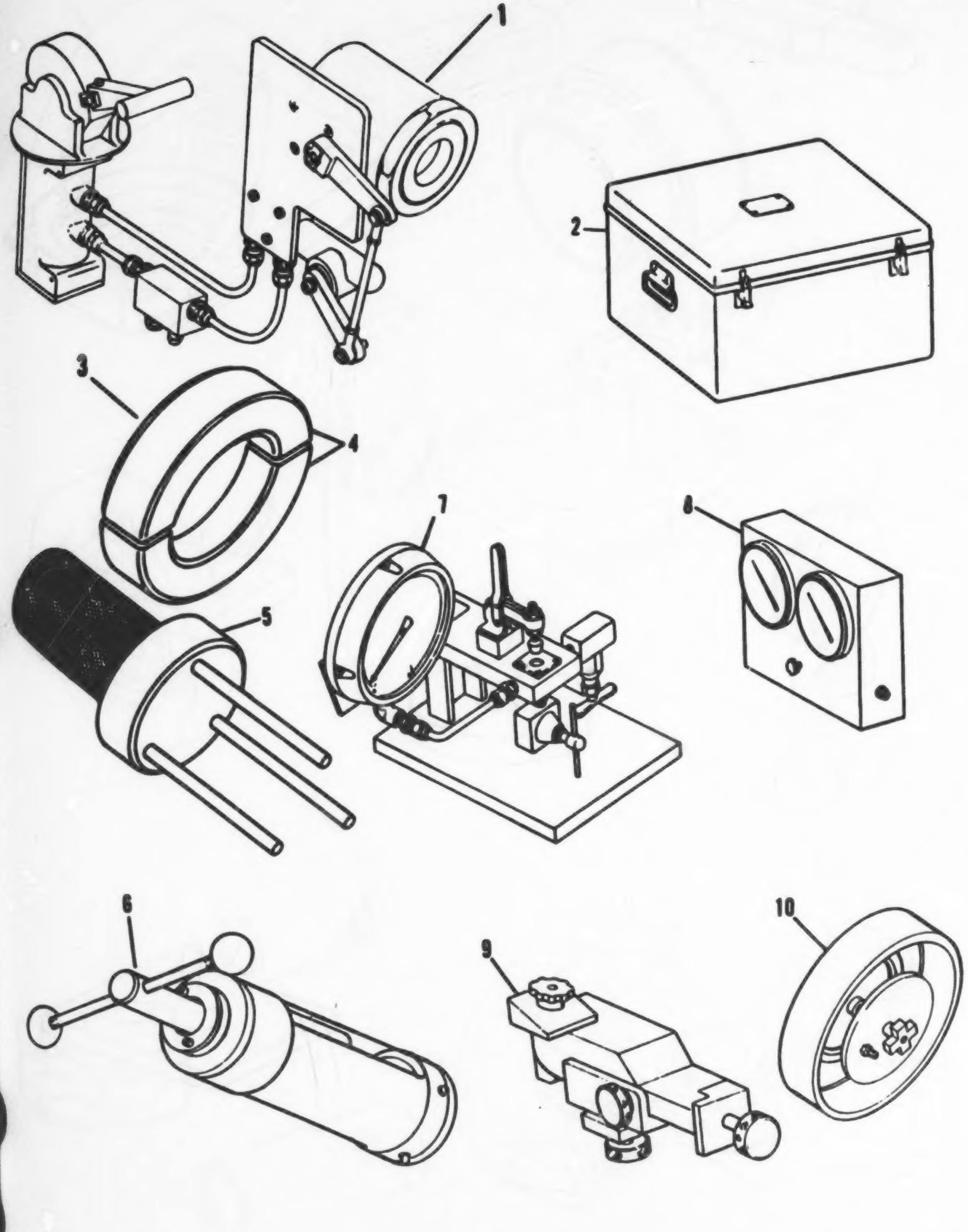

Figure E11. Engine Tools

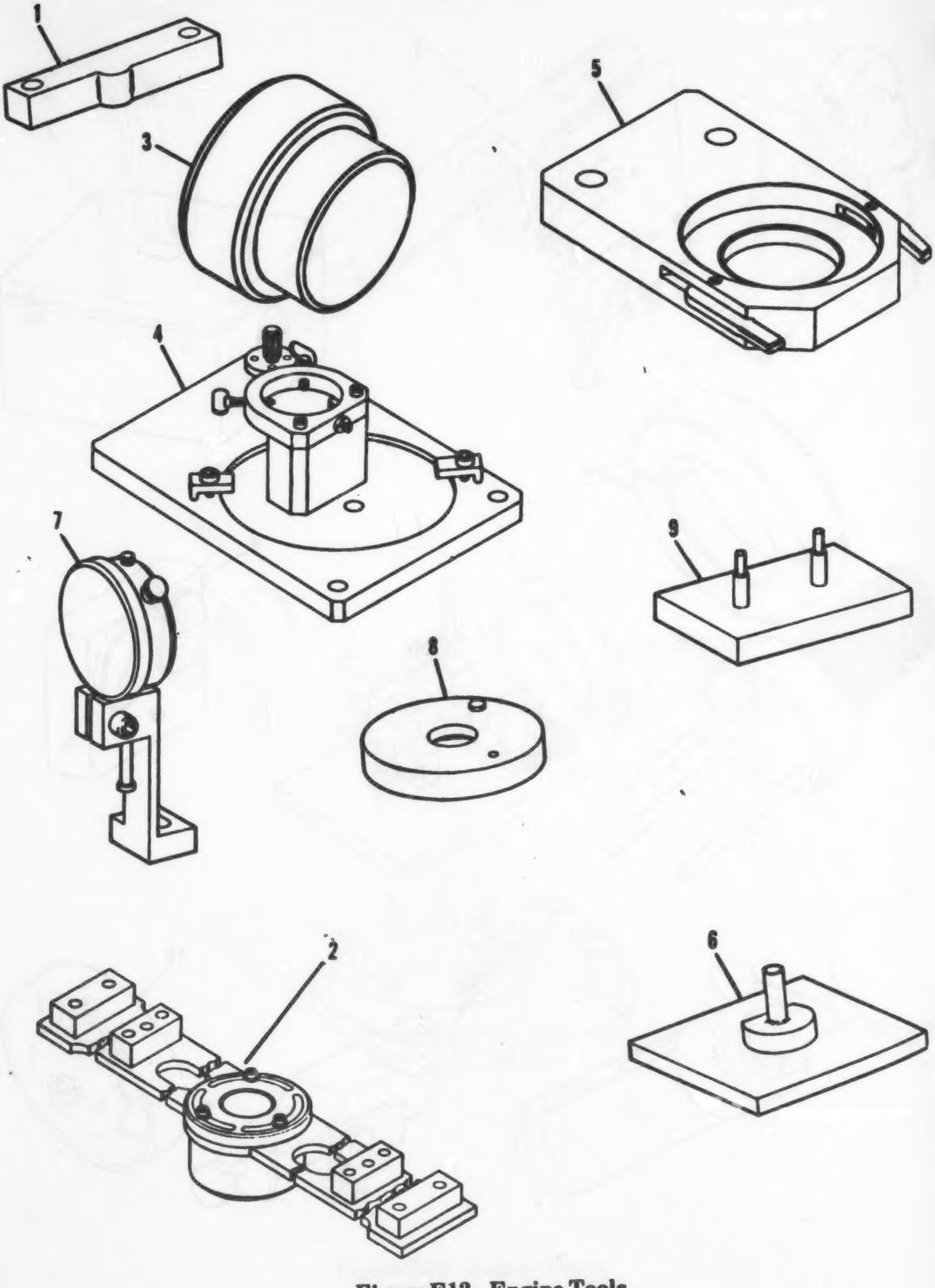

Figure E12. Engine Tools

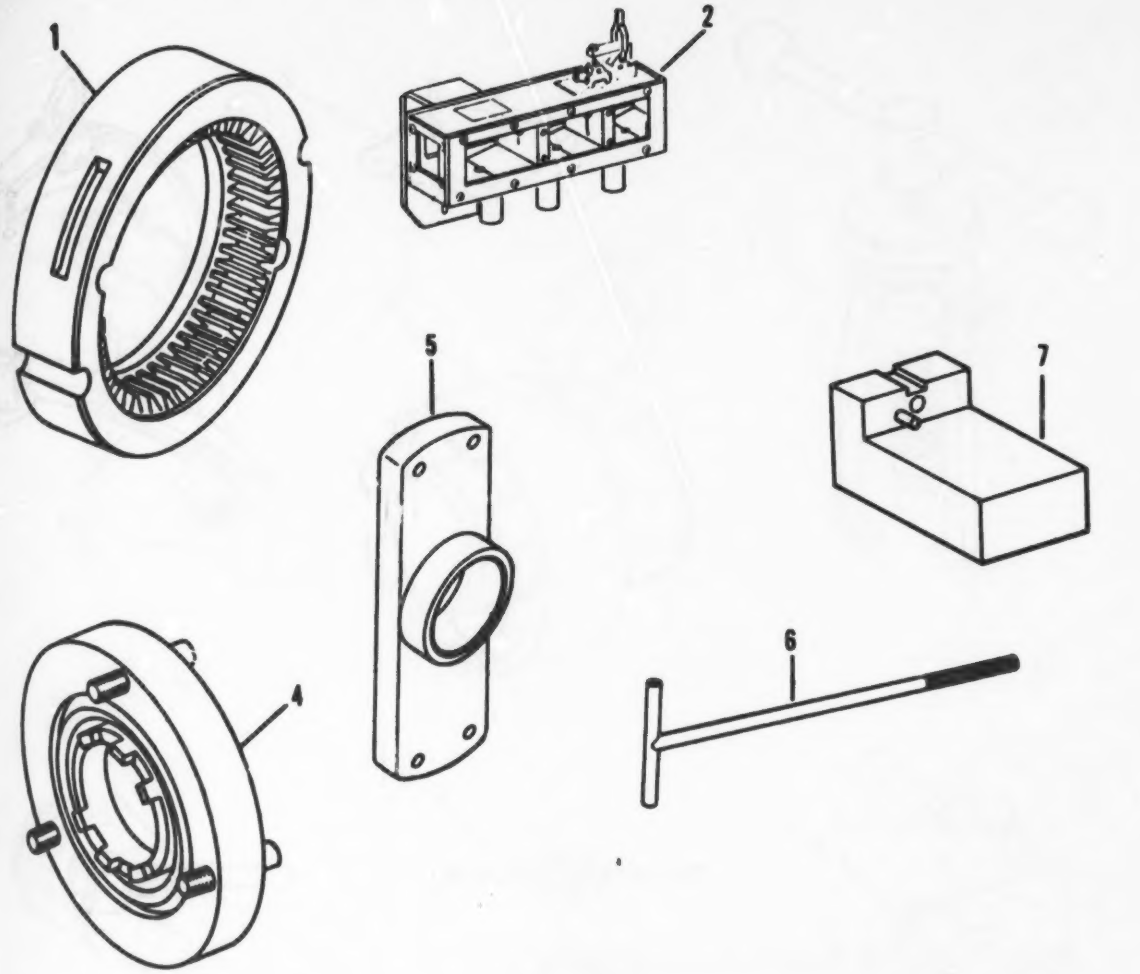

Figure E13. Engine Tools

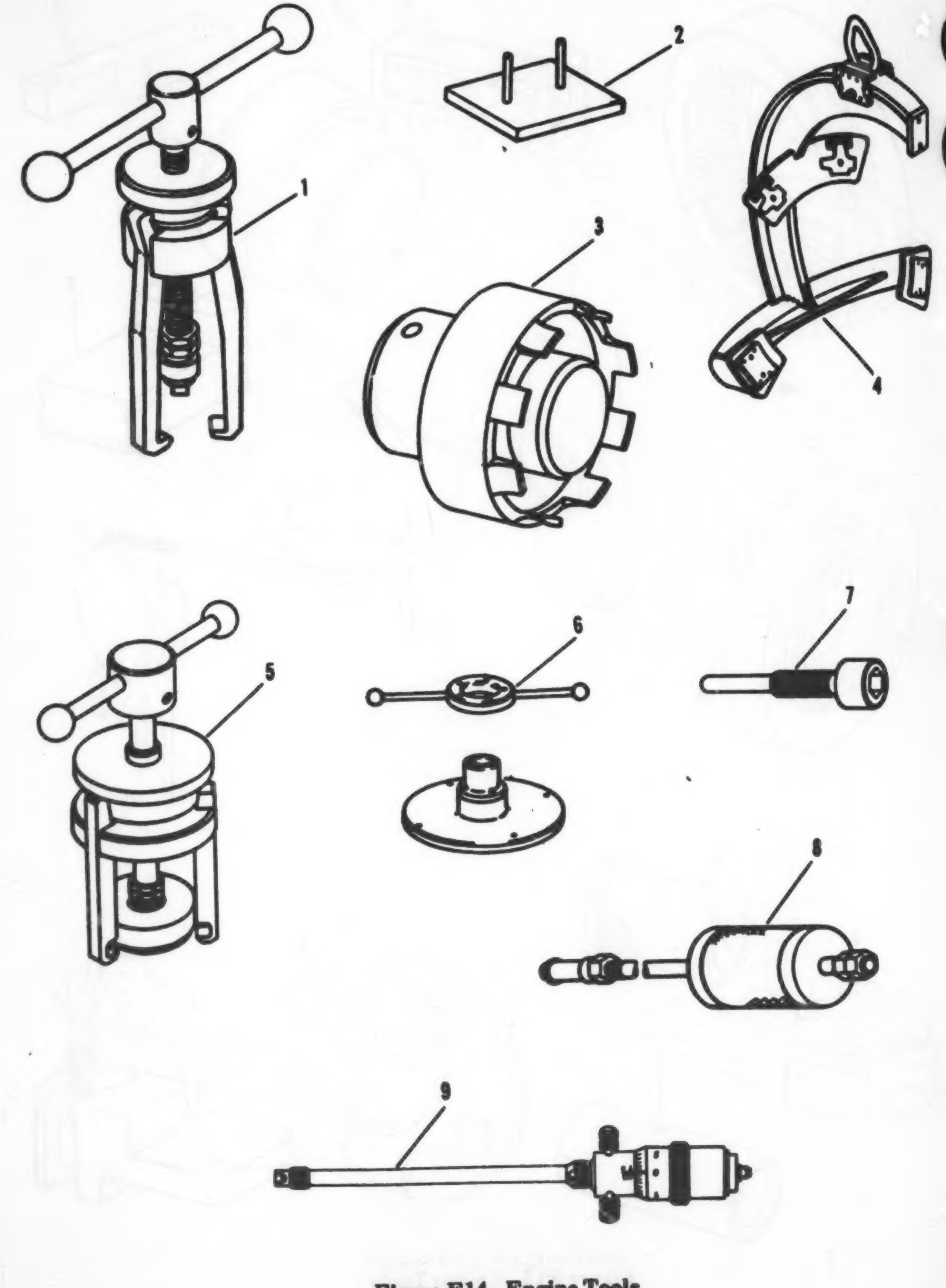

Figure E14. Engine Tools

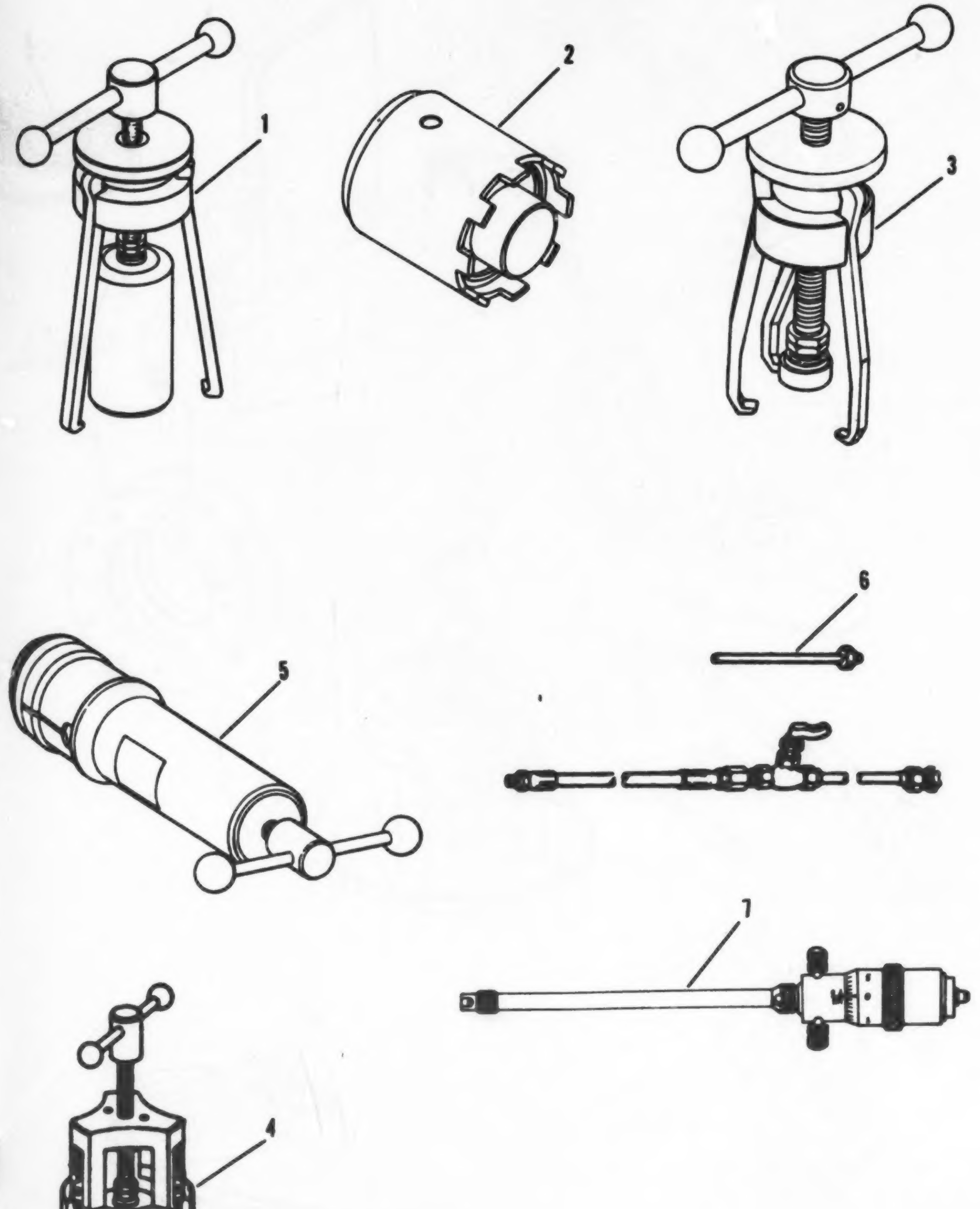

Figure E15. Engine Tools

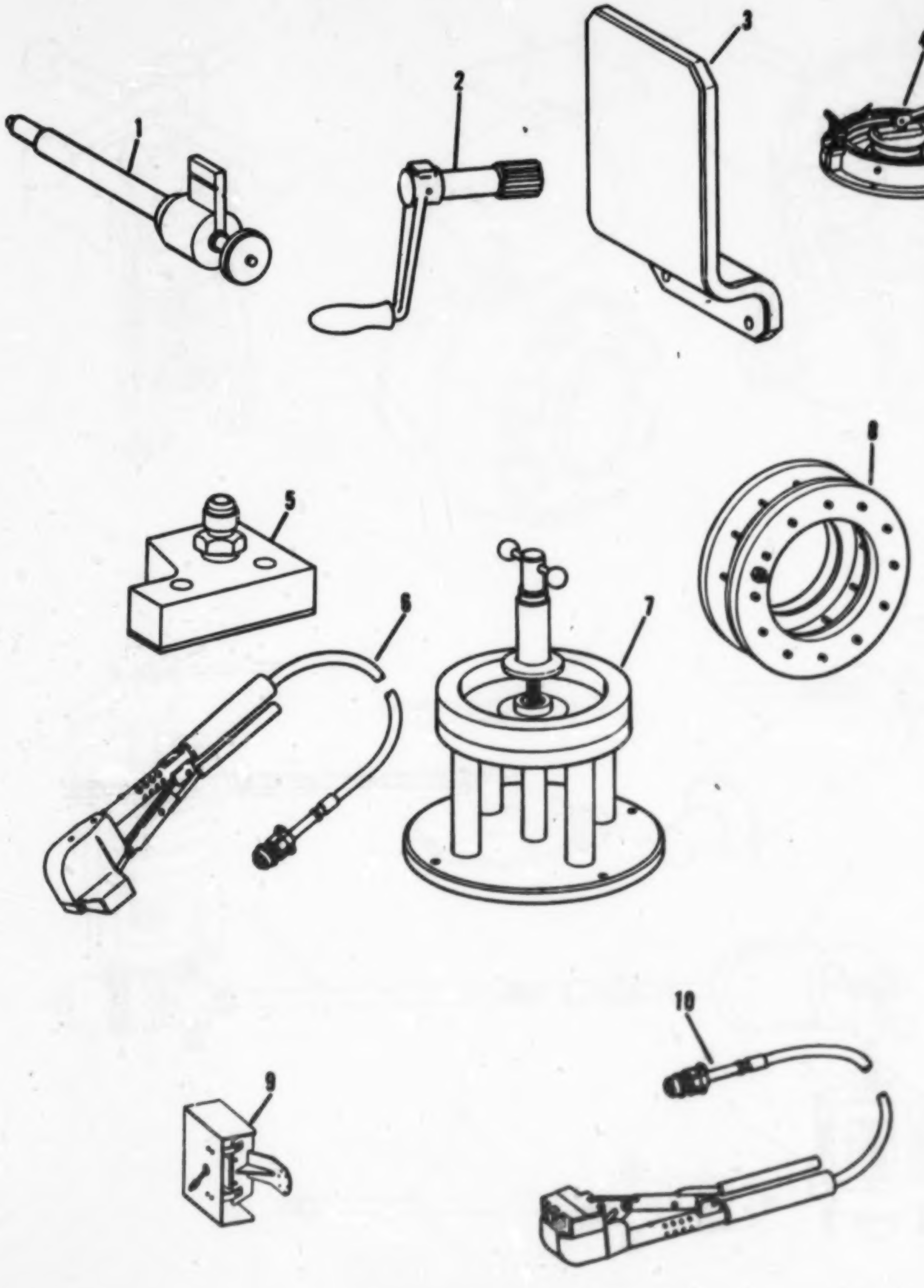

Figure E16. Engine Tools

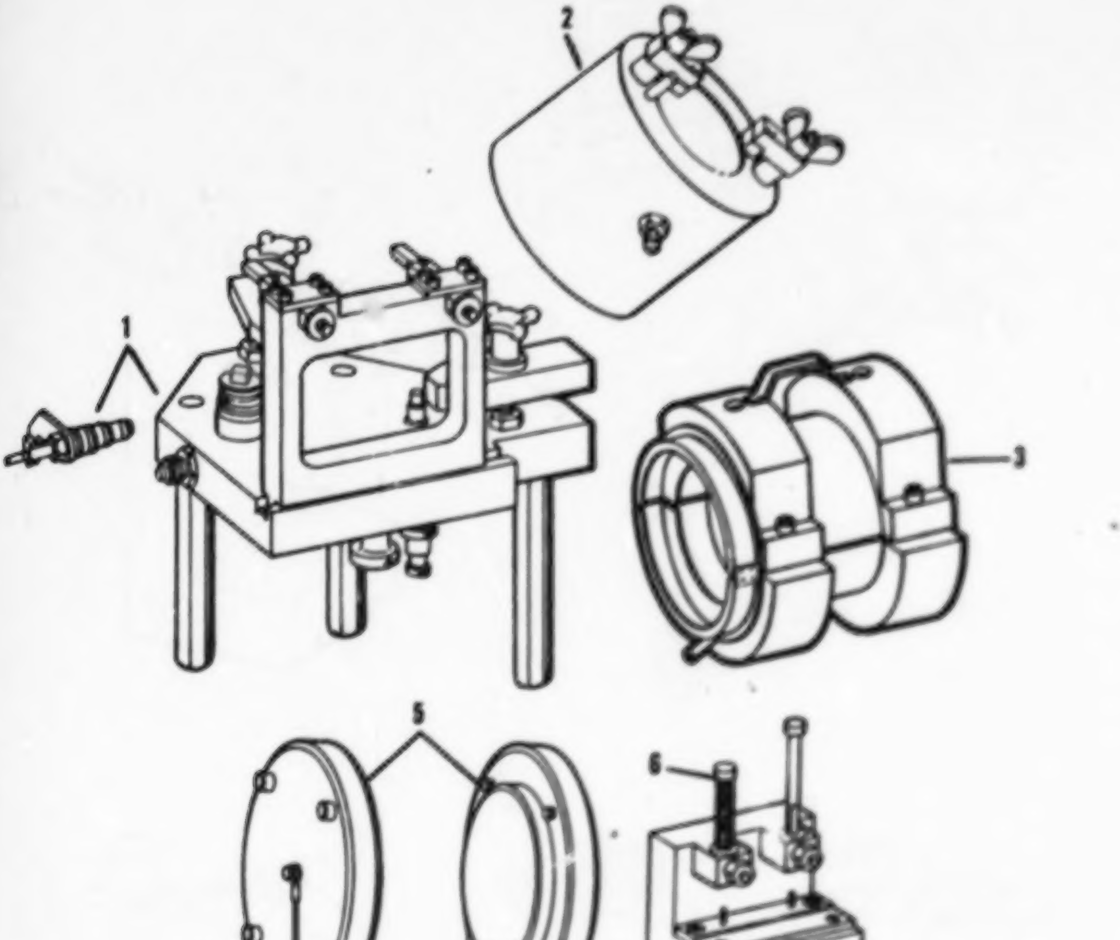

Figure E17. Engine Tools

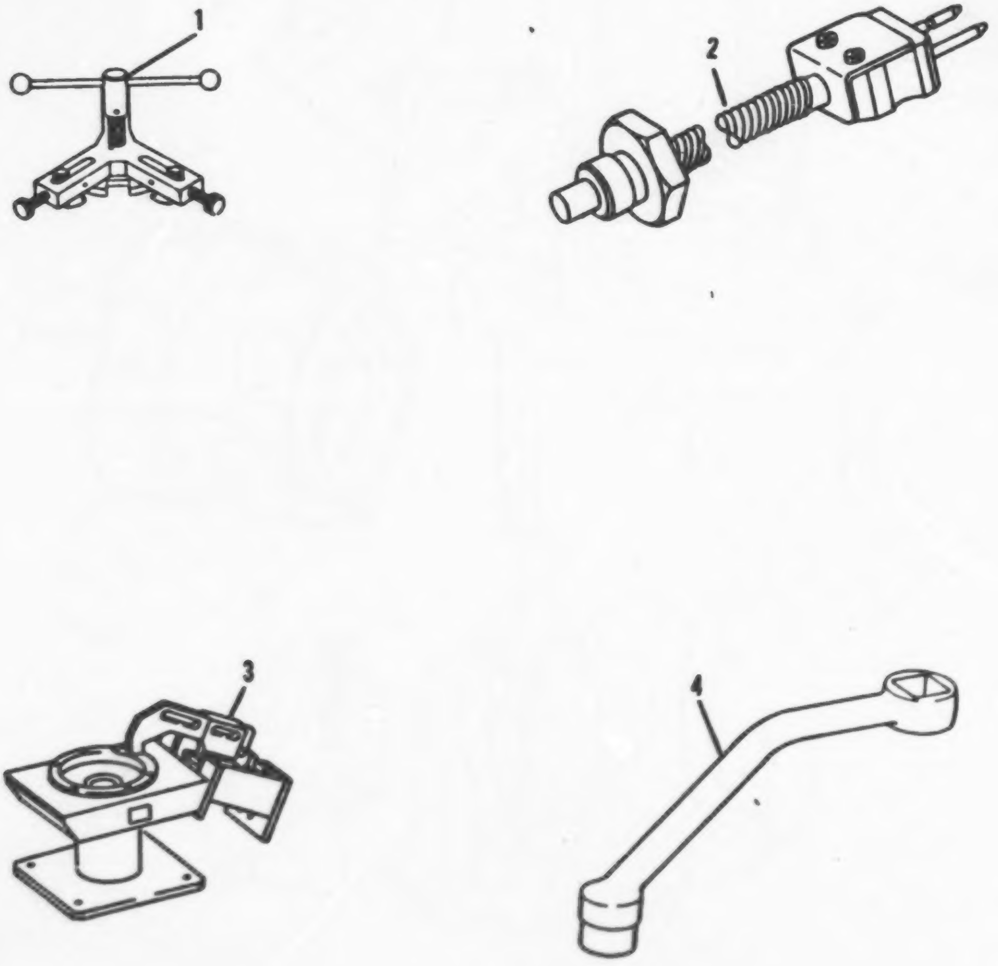

Figure E18. Engine Tools

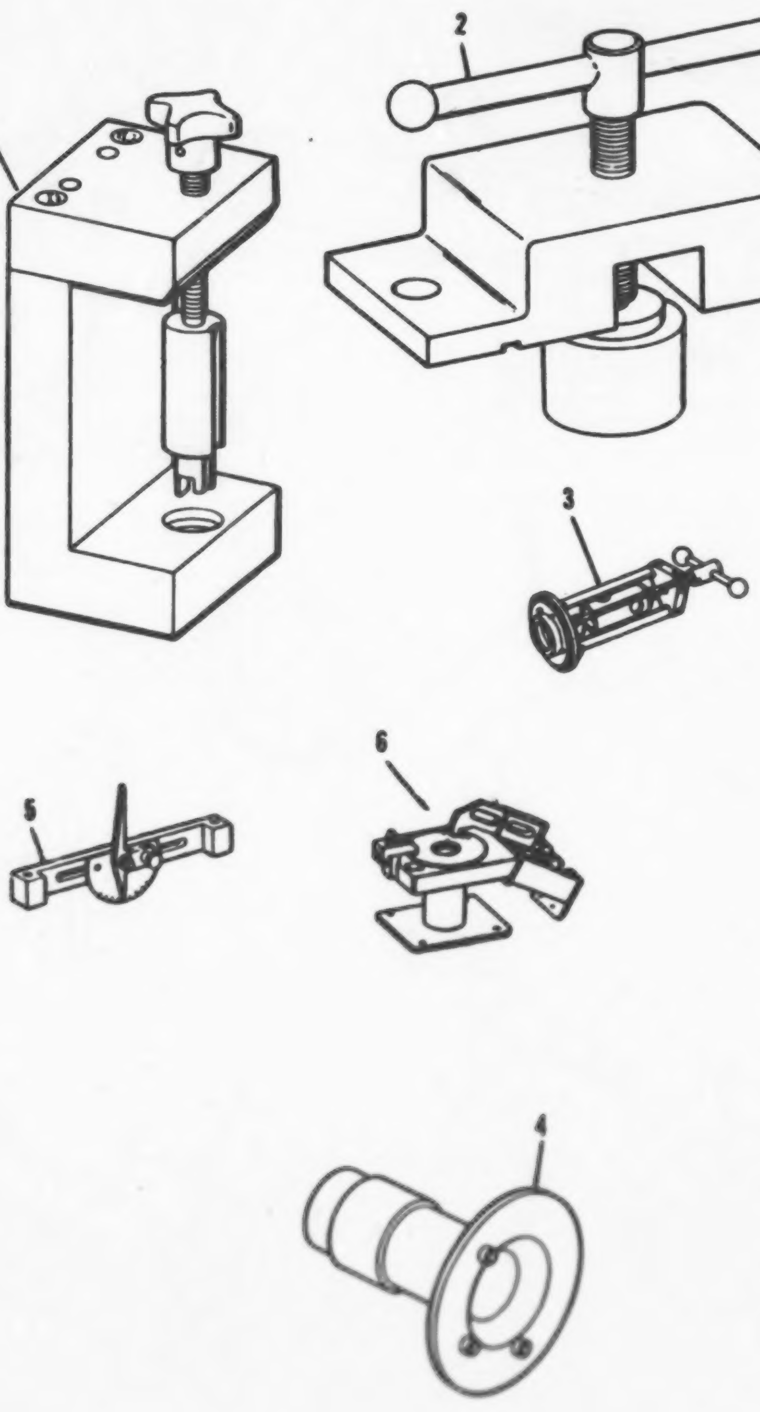

Figure E19. Engine Tools

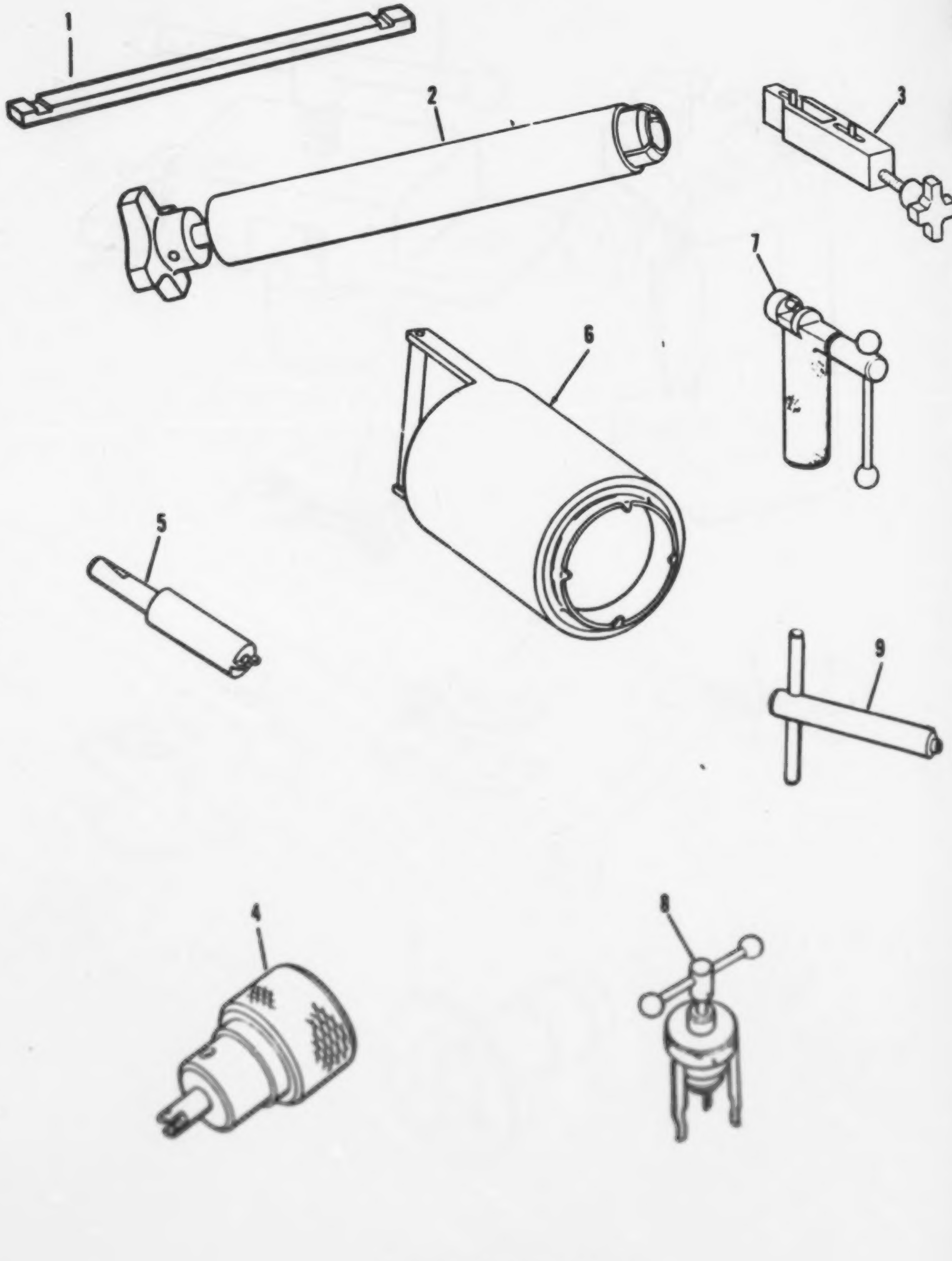

Figure E28. Engine Tools

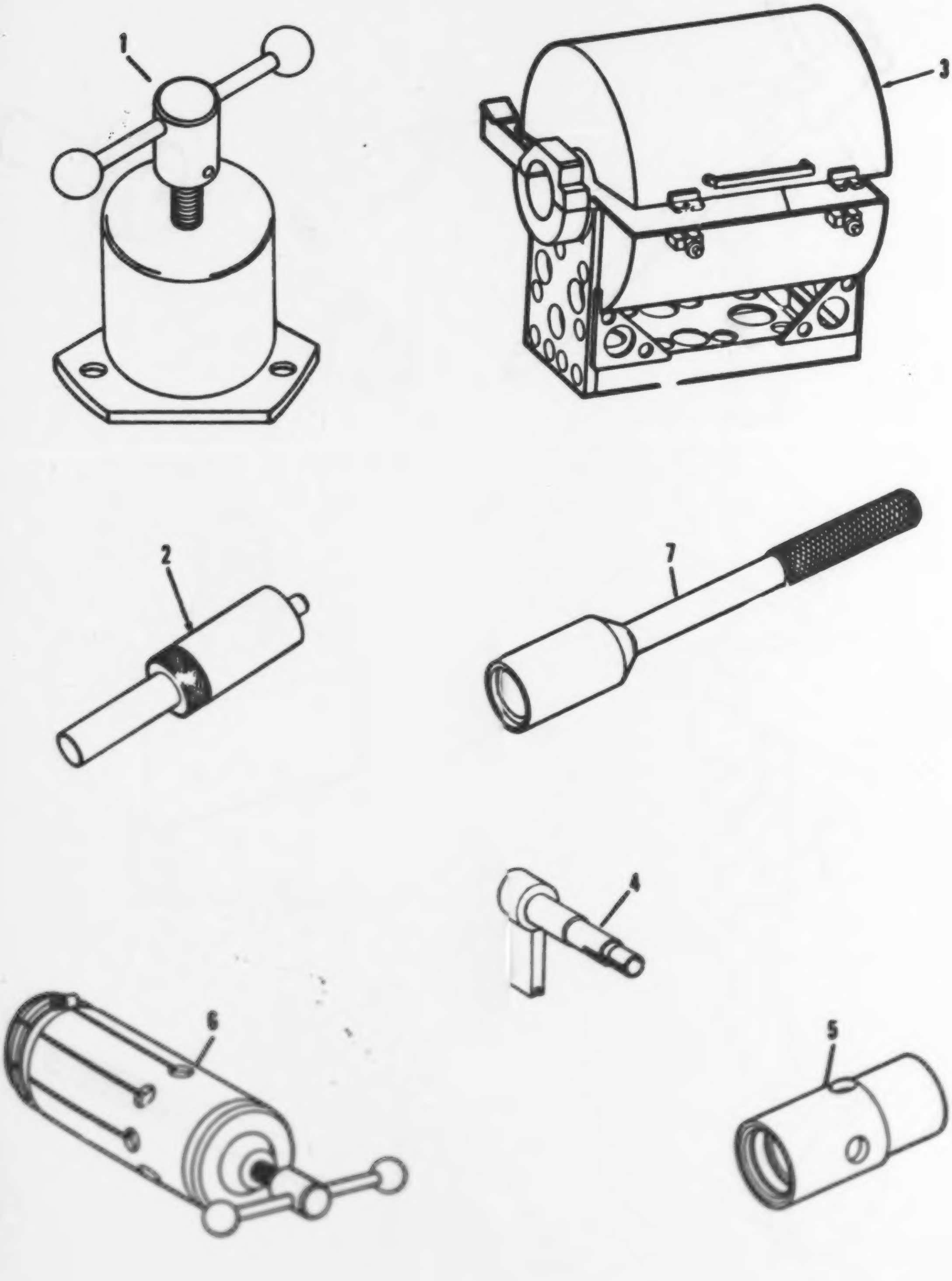

Figure E21. Engine Tools

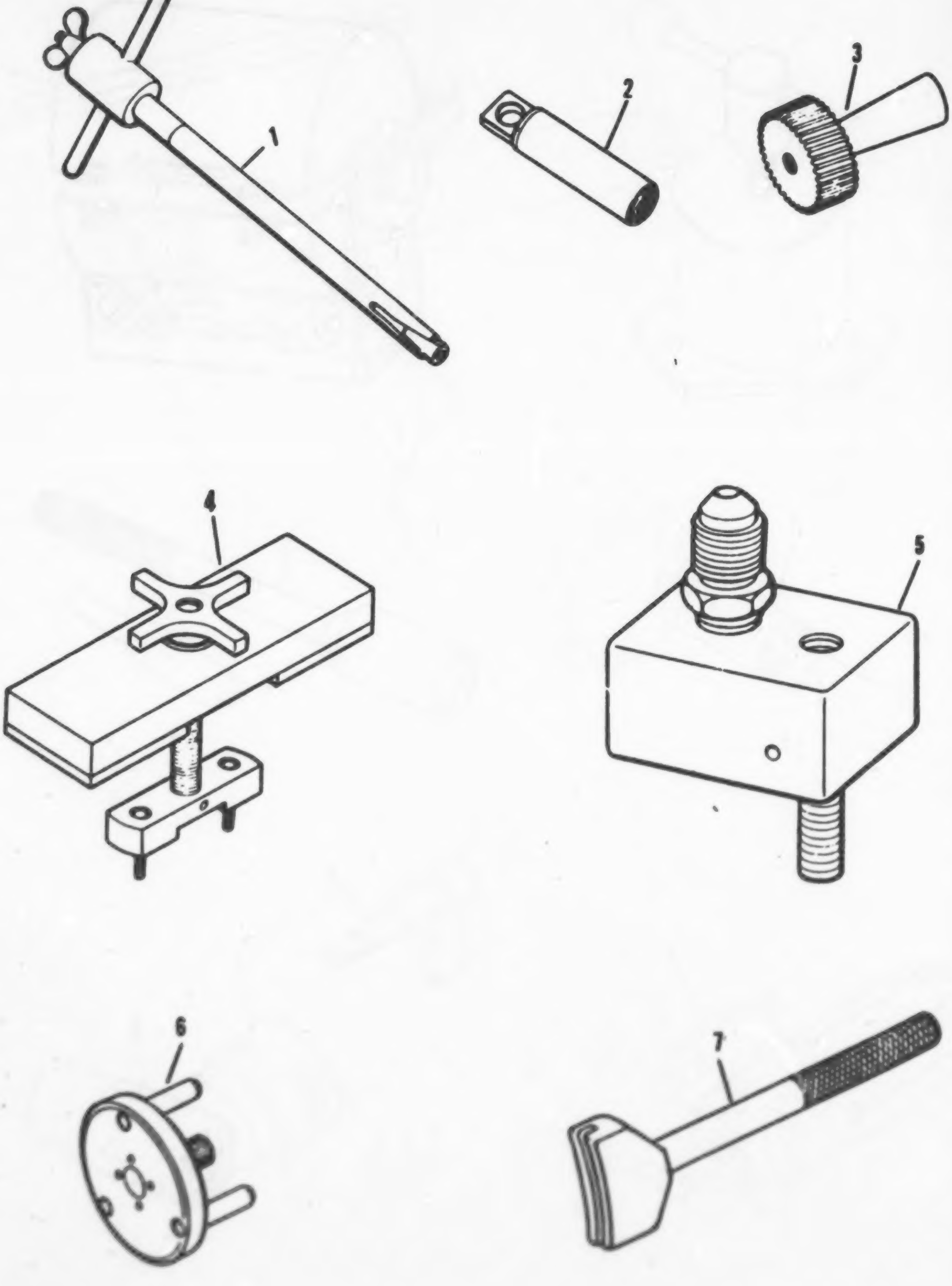

Figure E22. Engine Tools

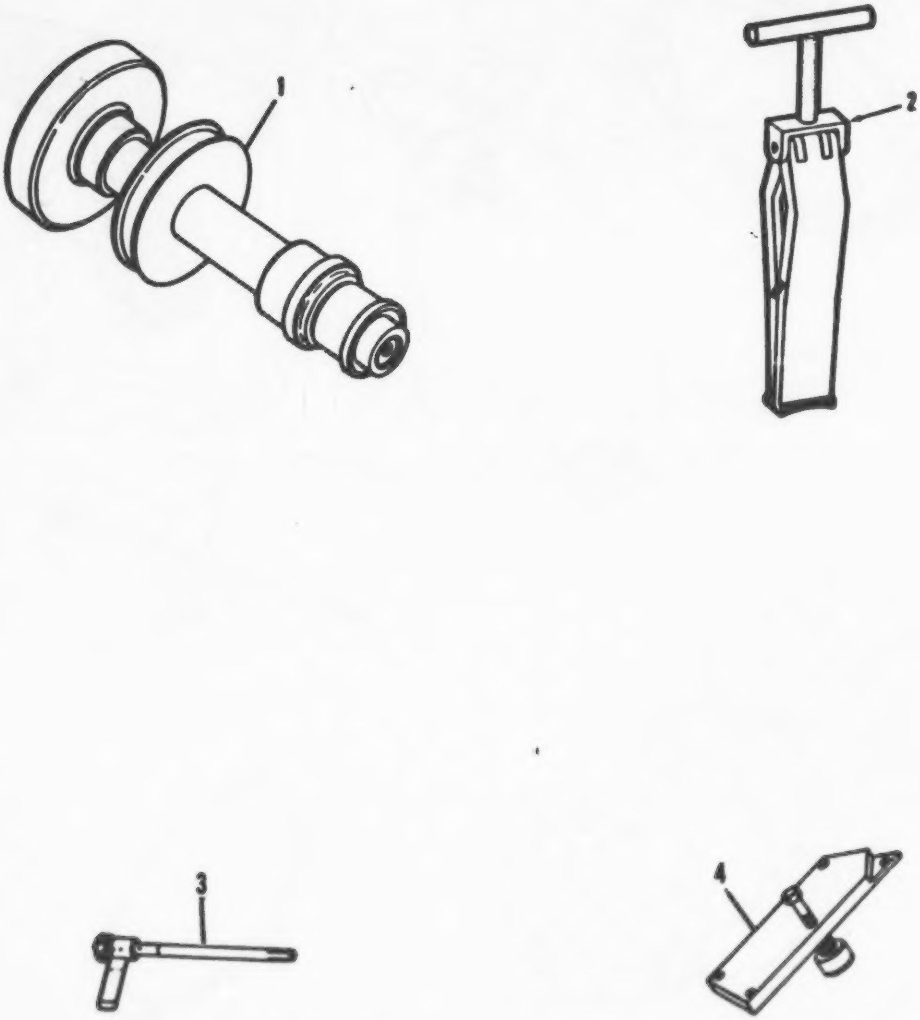

Figure E23. Engine Tools

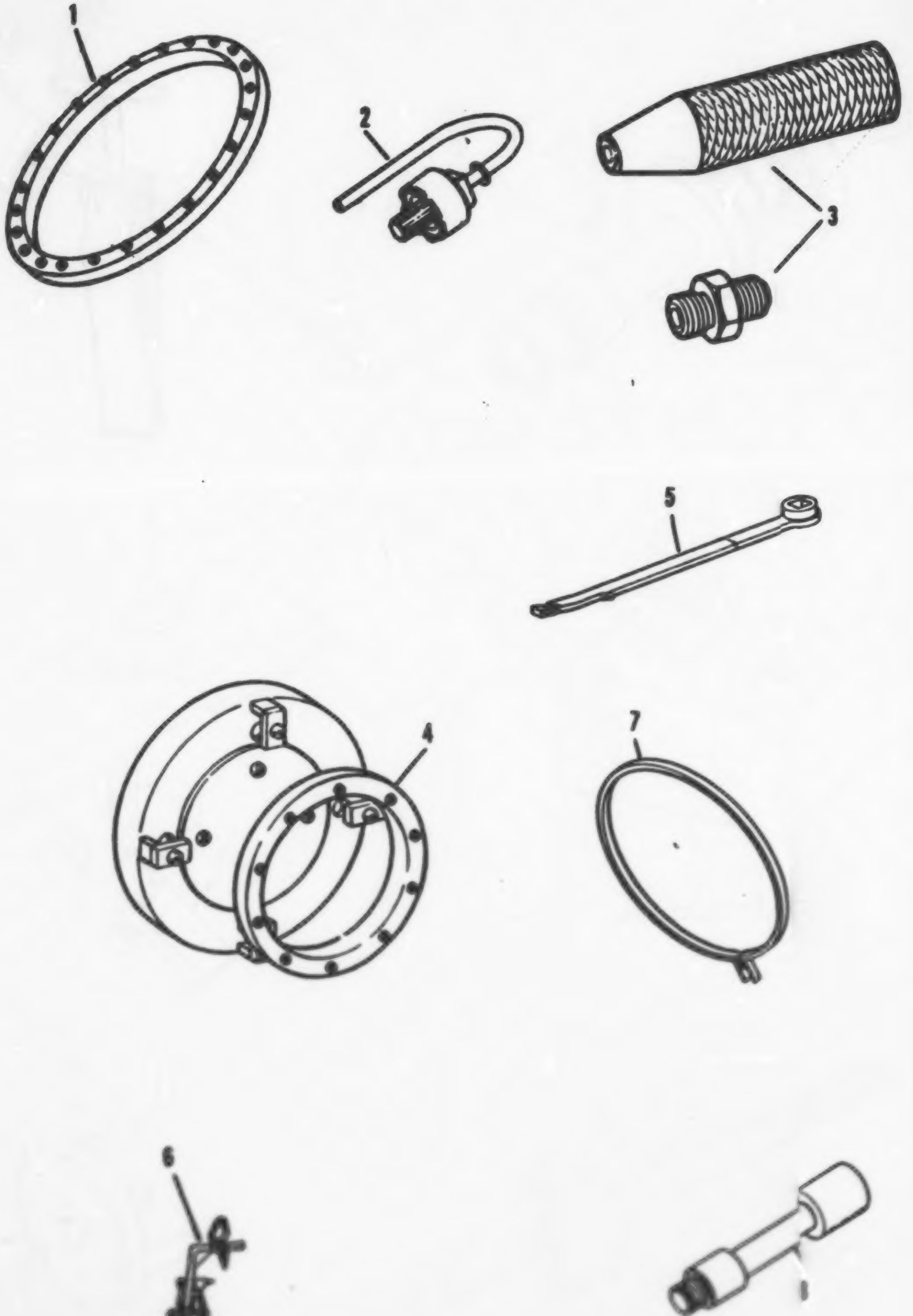

Figure 224. Engine Tools

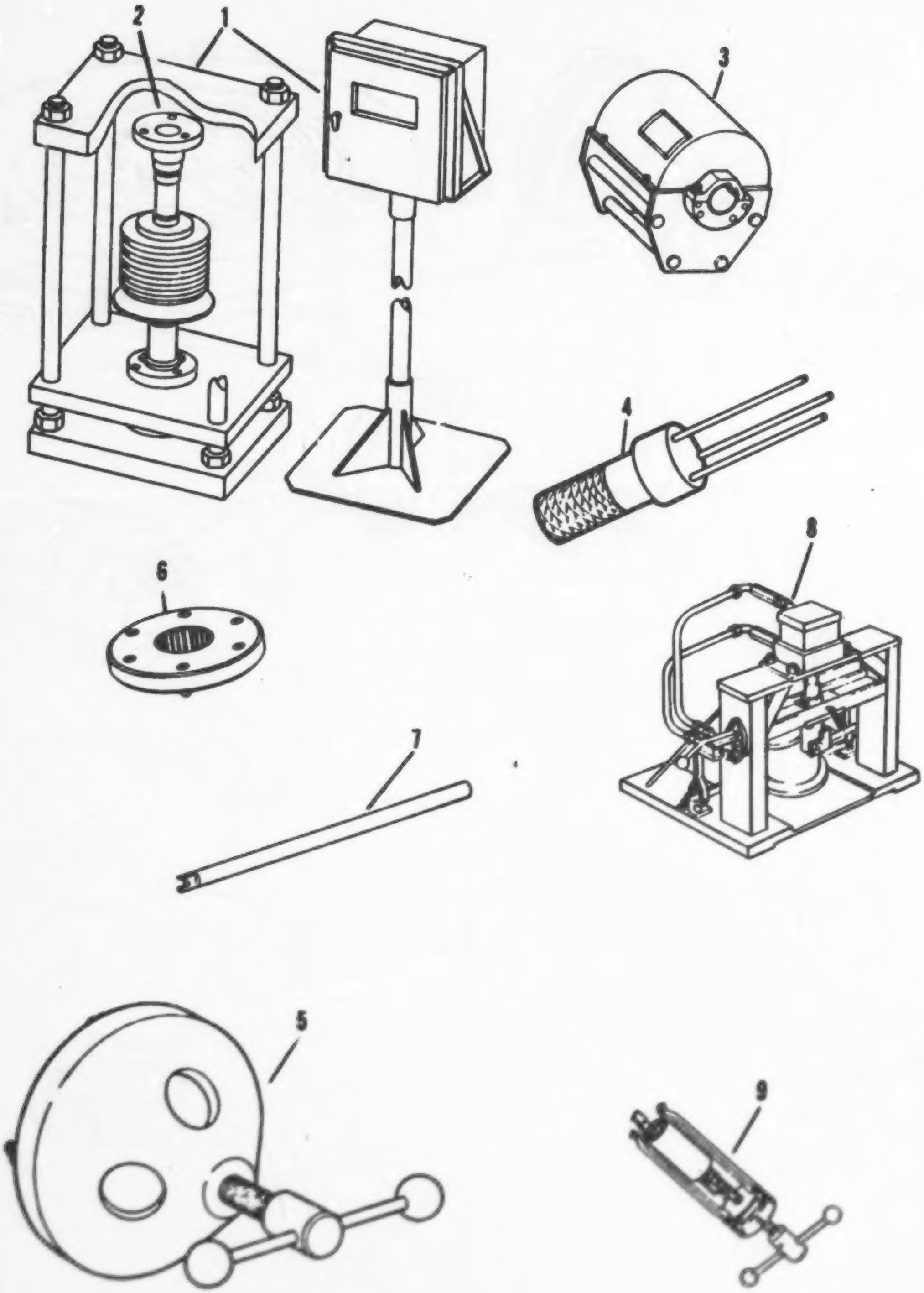

Figure E25. Engine Tools

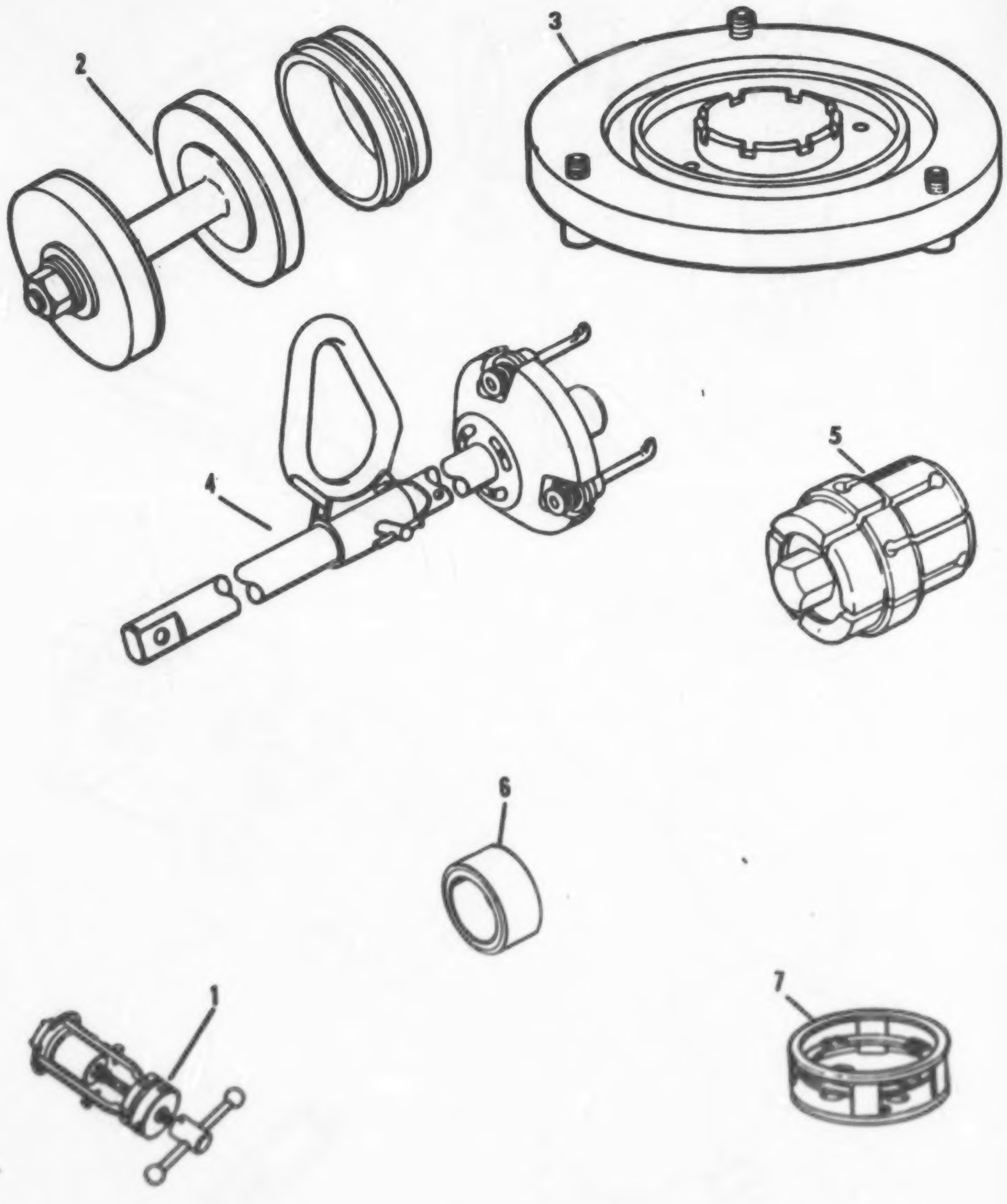

Figure E26. Engine Tools

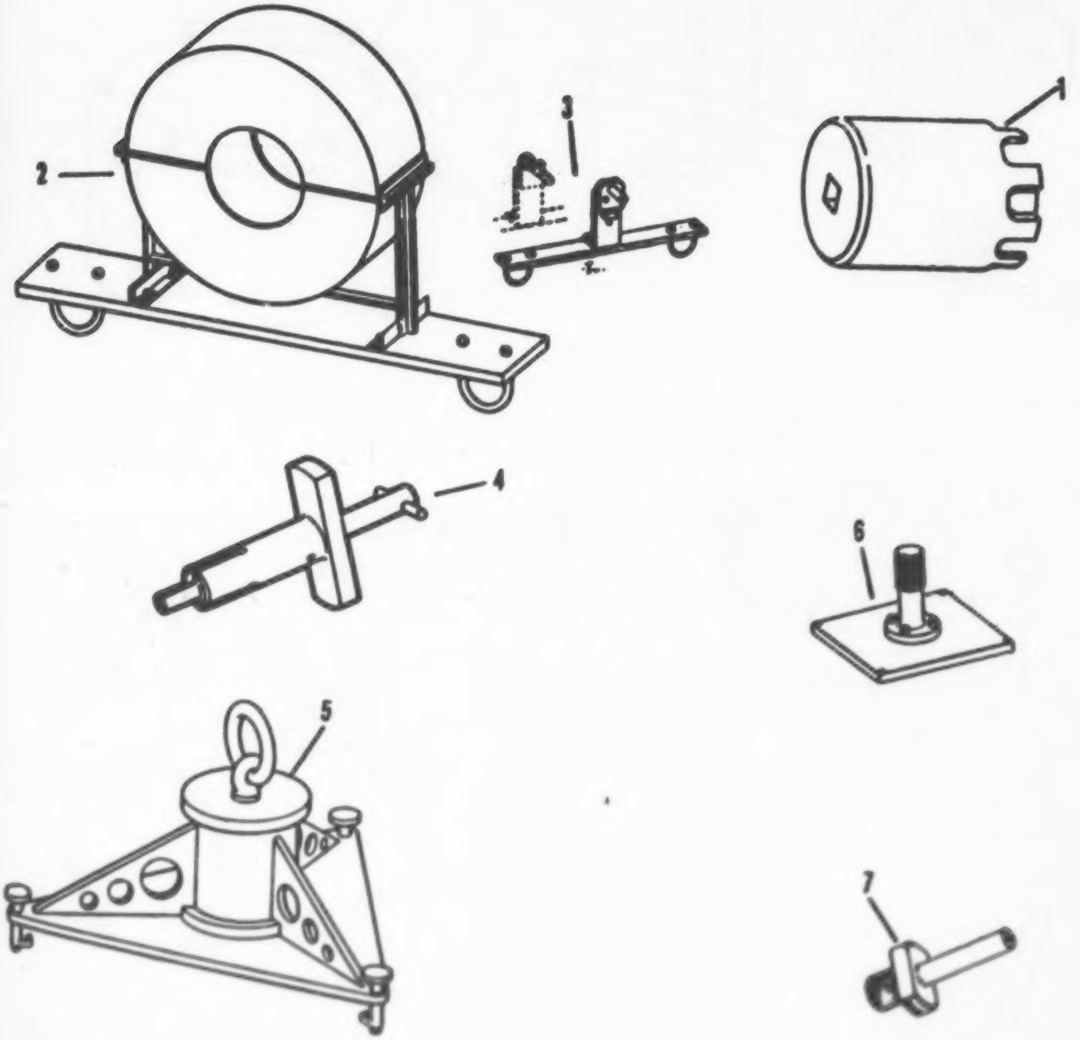

Figure E27. Engine Tools

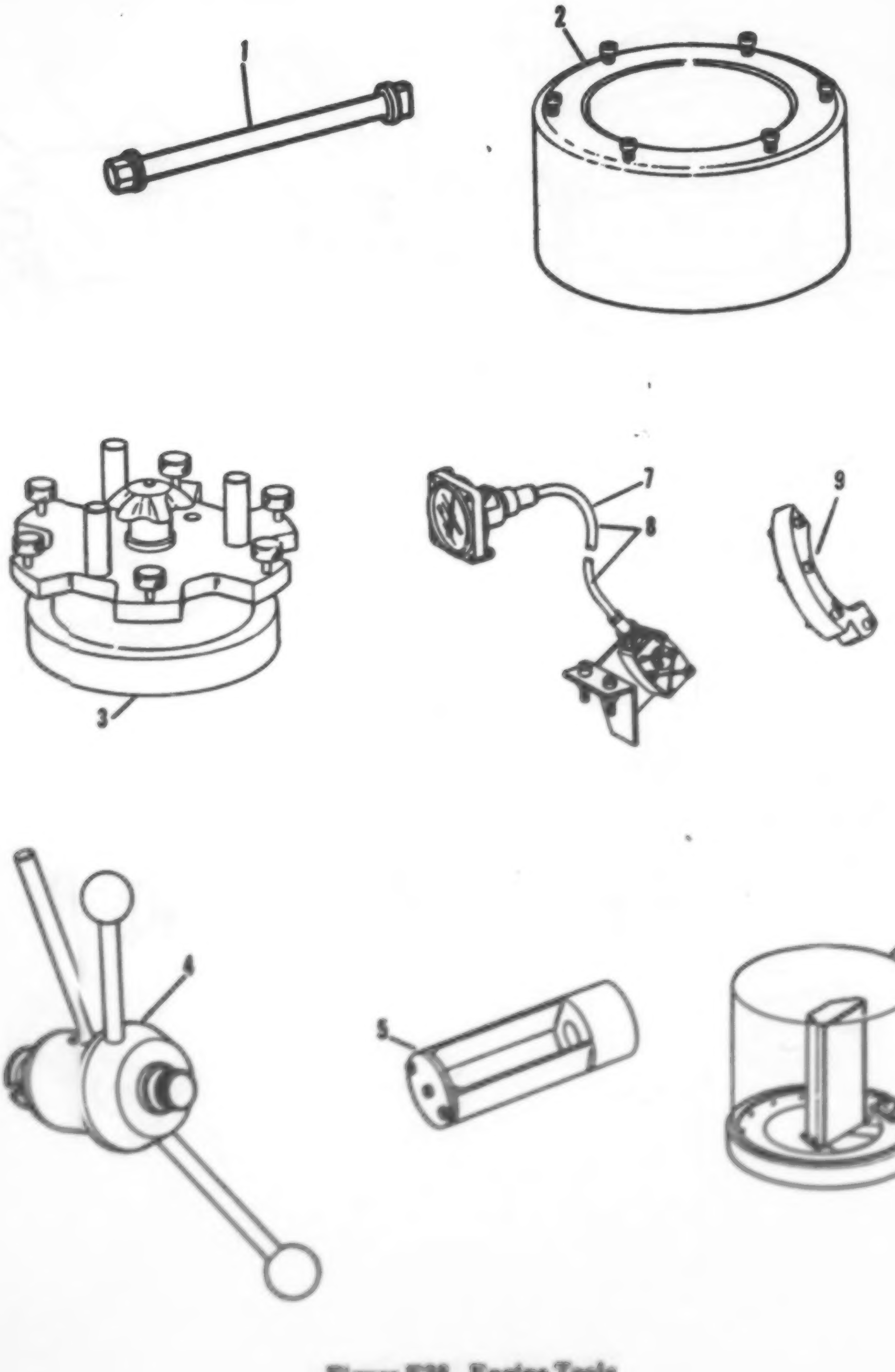

Figure E28. Engine Tools

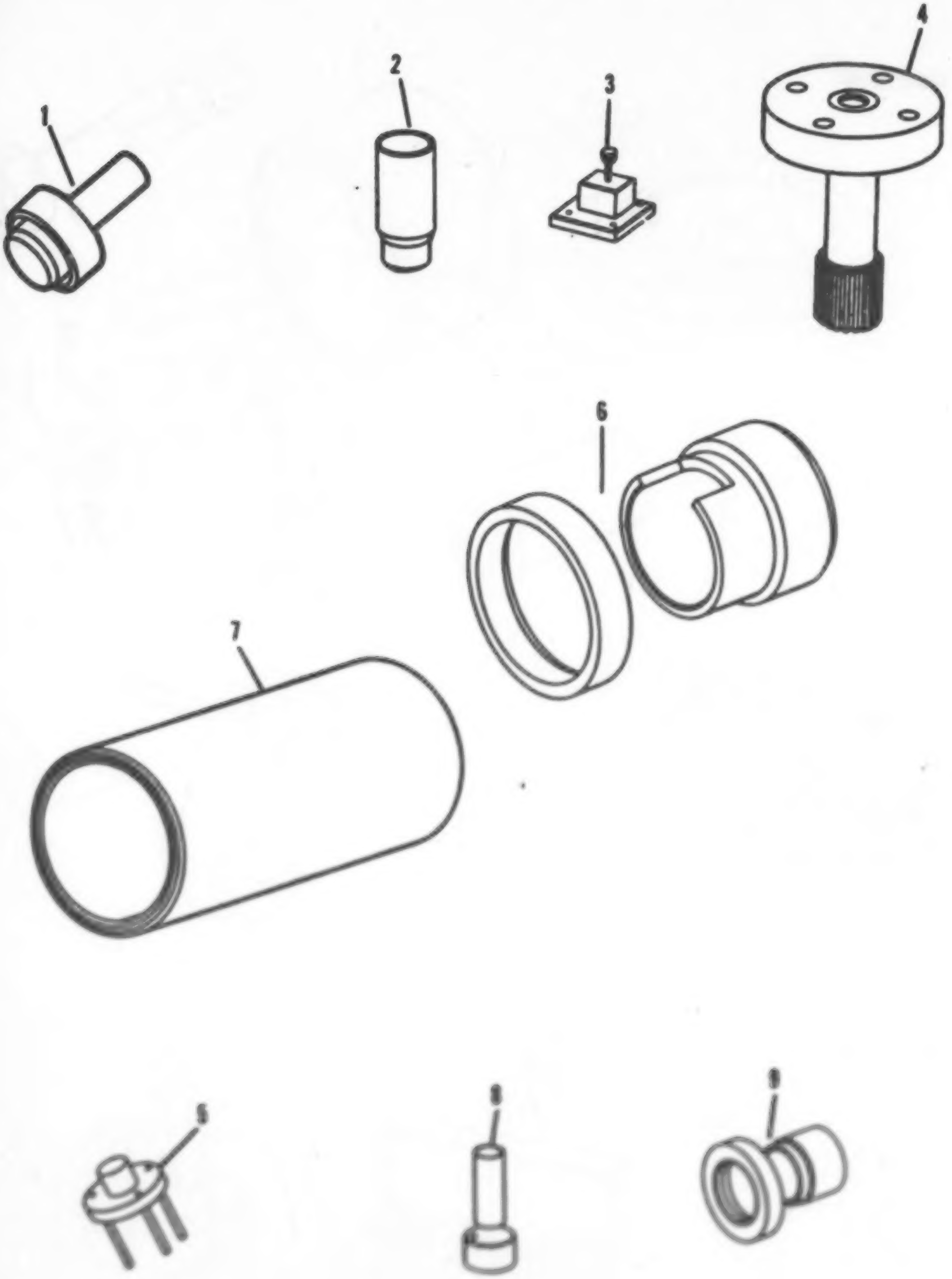

Figure E29. Engine Tools

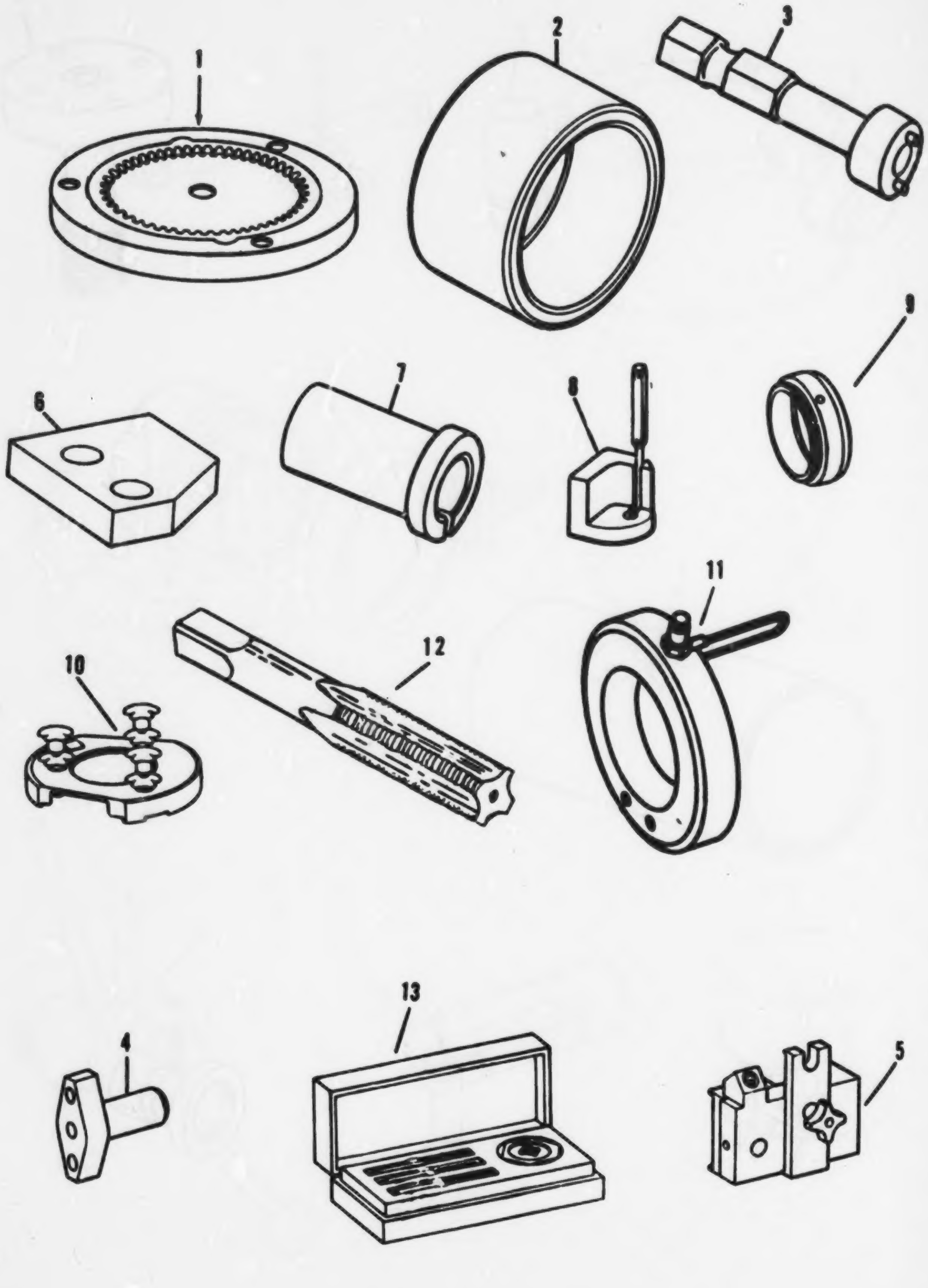

Figure E30. Engine Tools

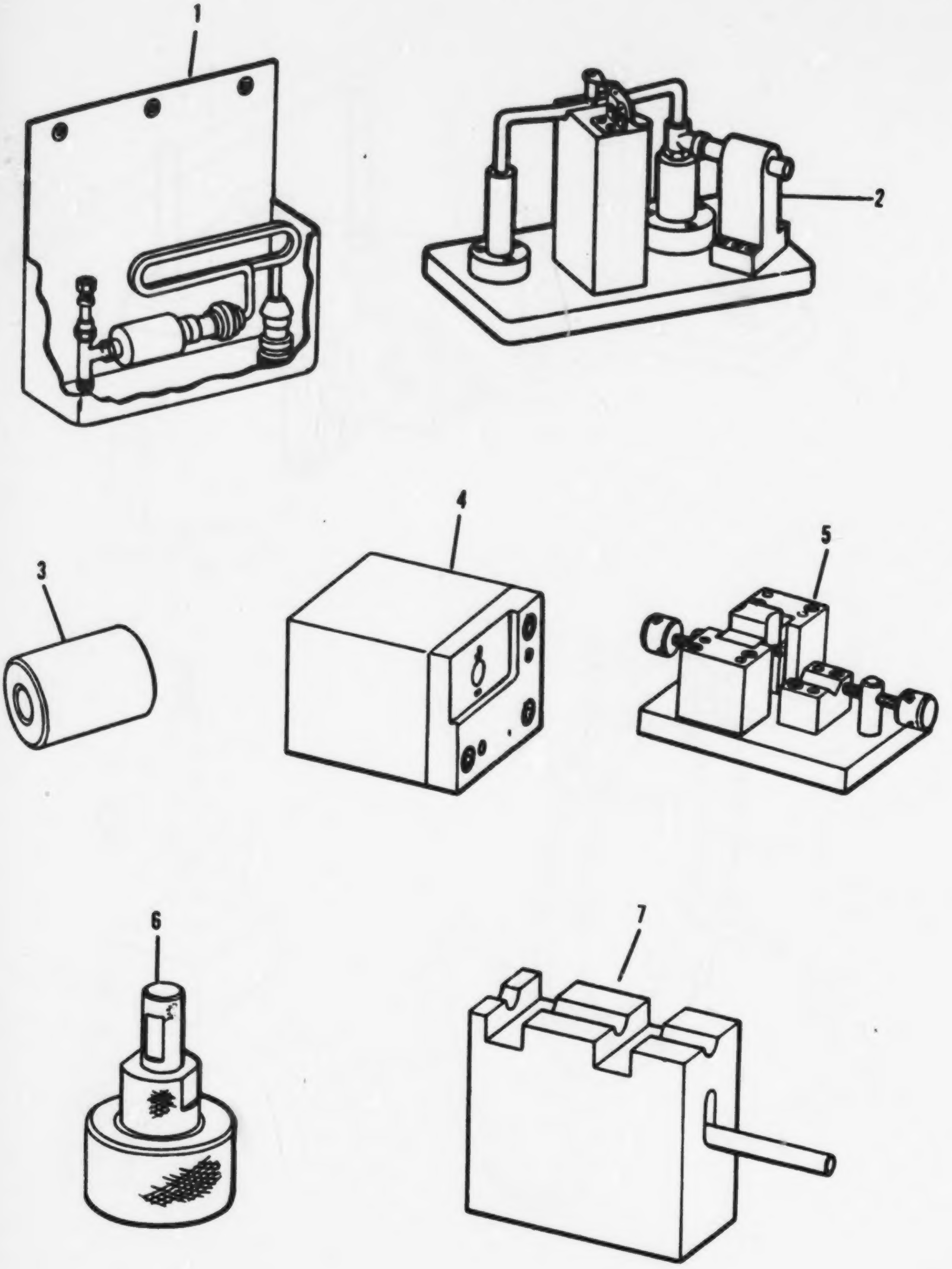

Figure E31. Engine Tools

best copy available

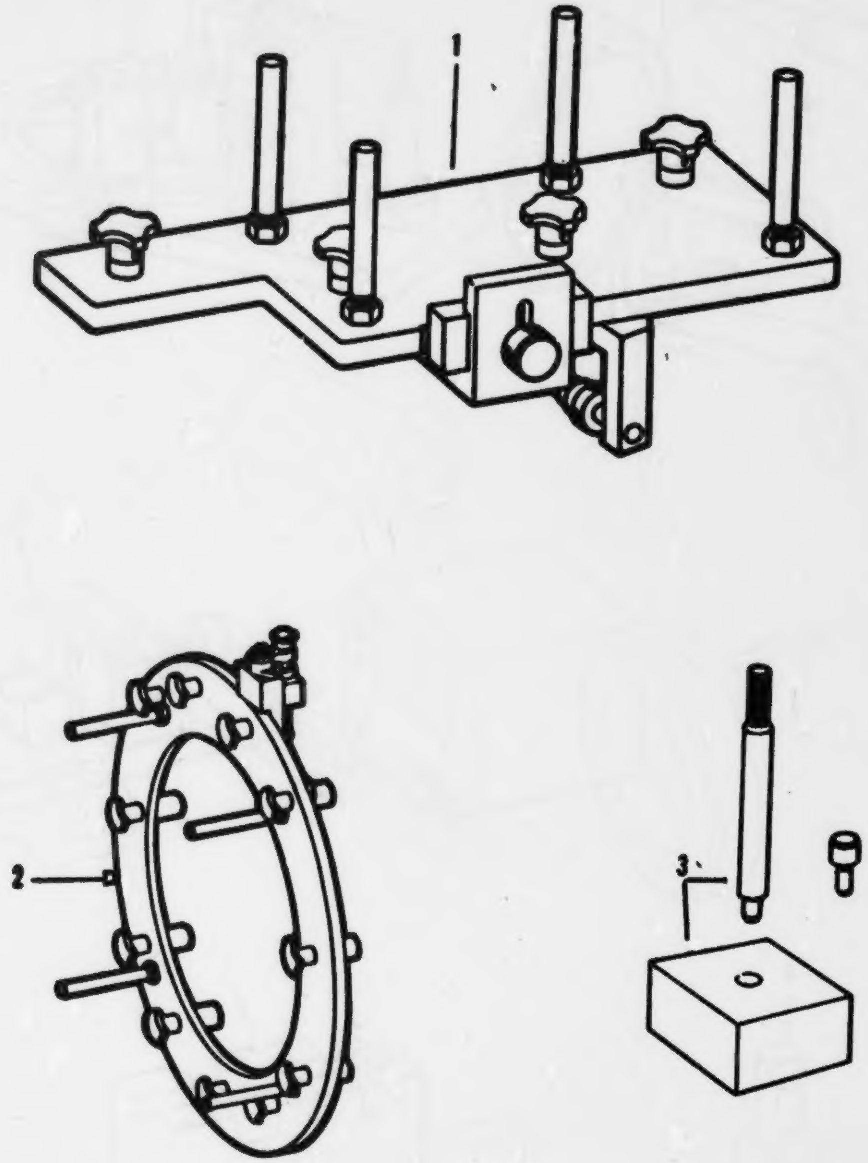

Figure E32. Engine Tools

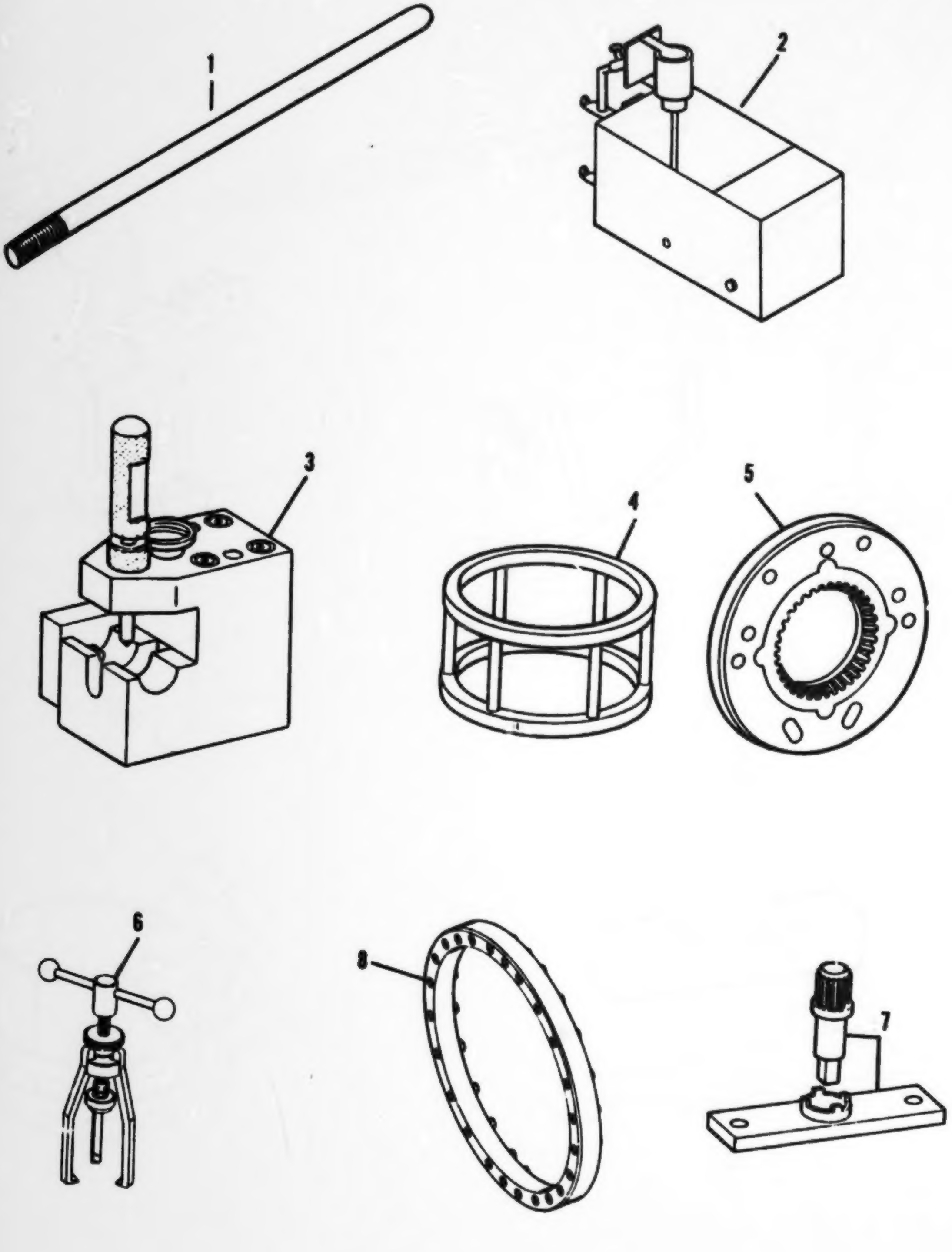

Figure E33. Engine Tools

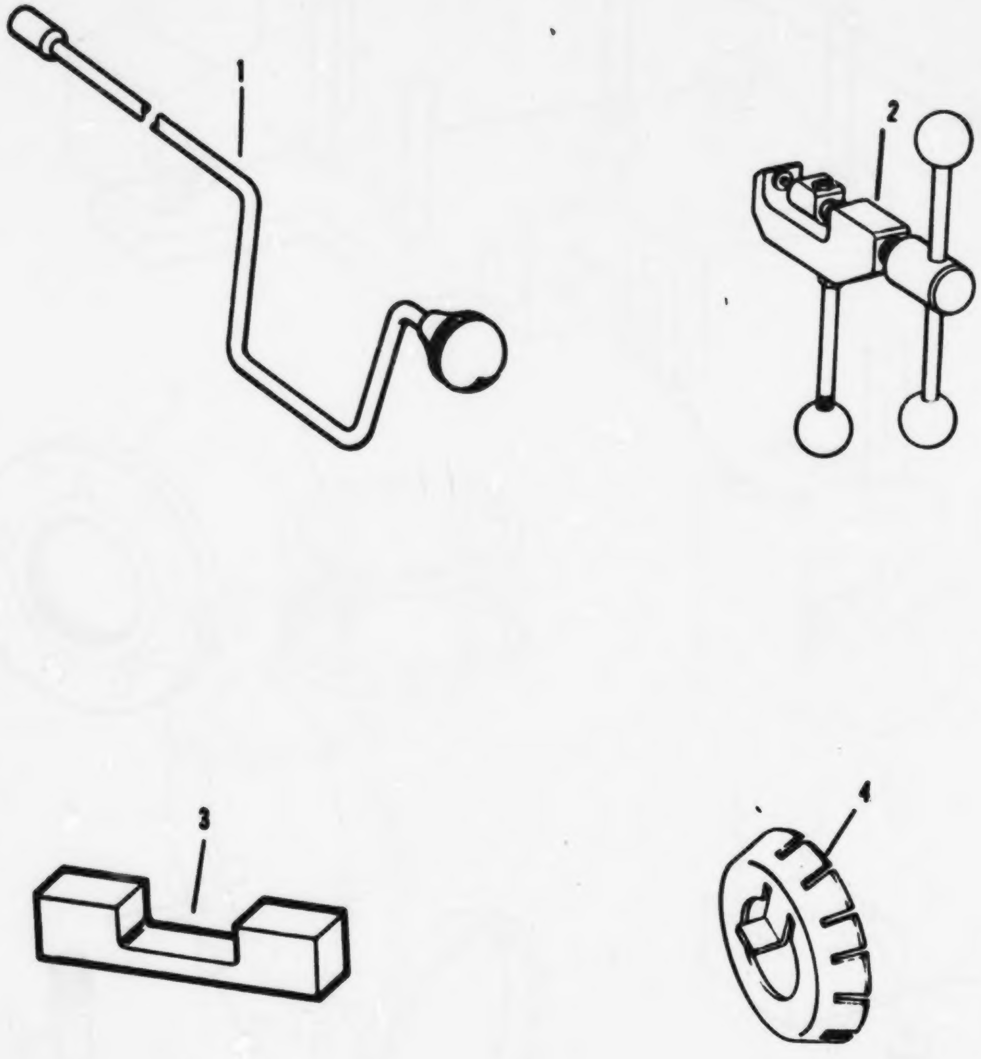

Figure E34. Engine Tools

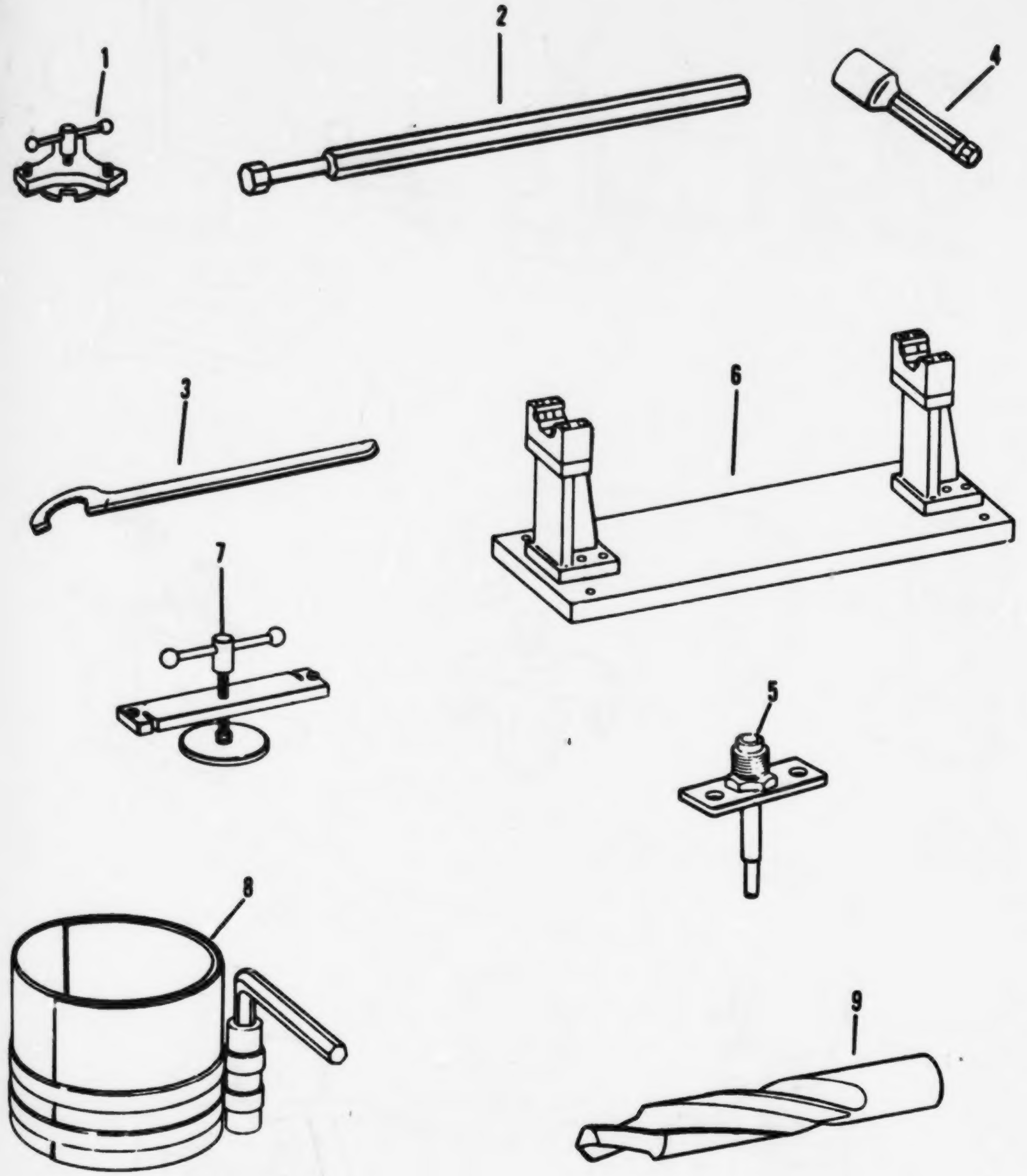

Figure E35. Engine Tools

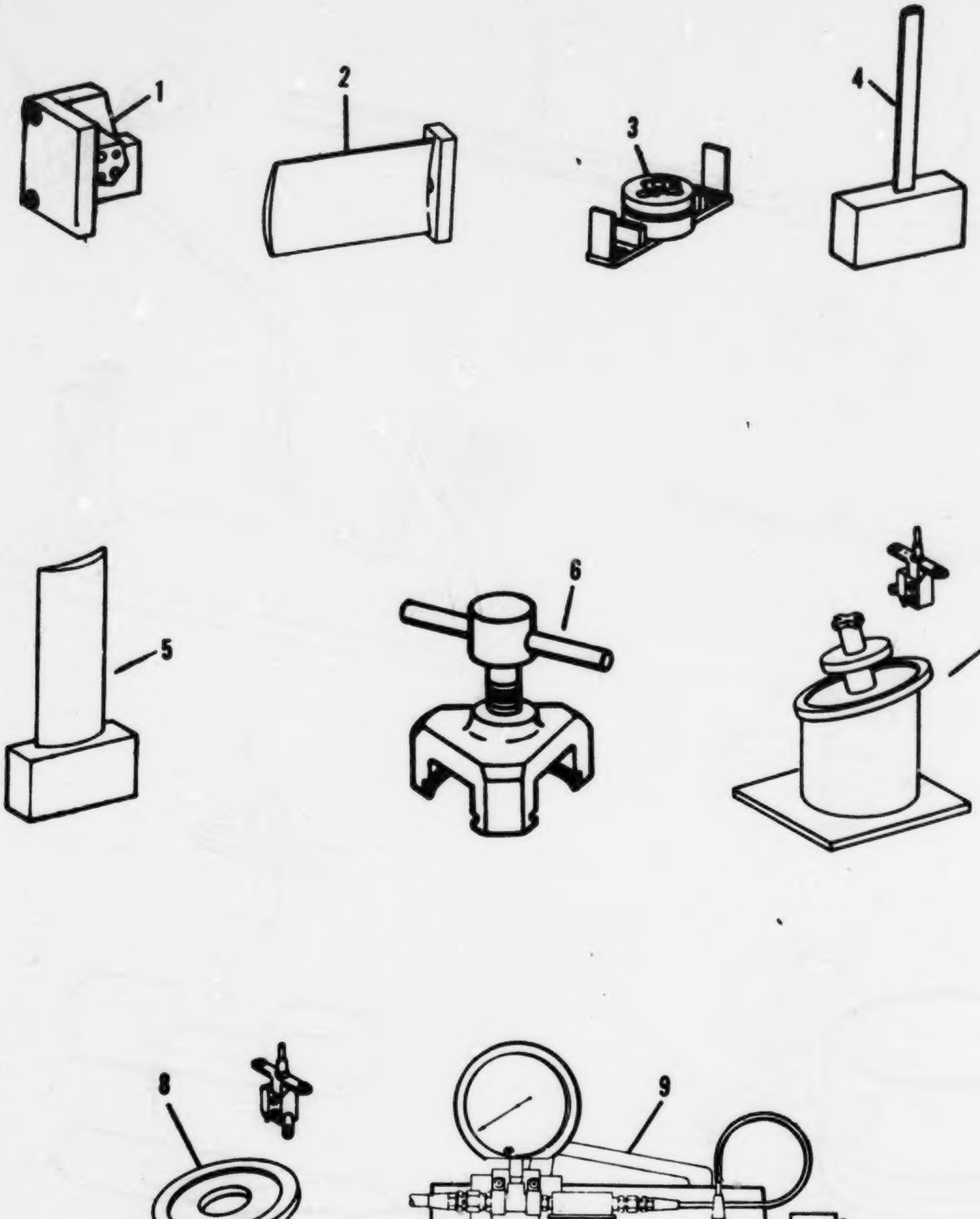

Figure E36. Engine Tools

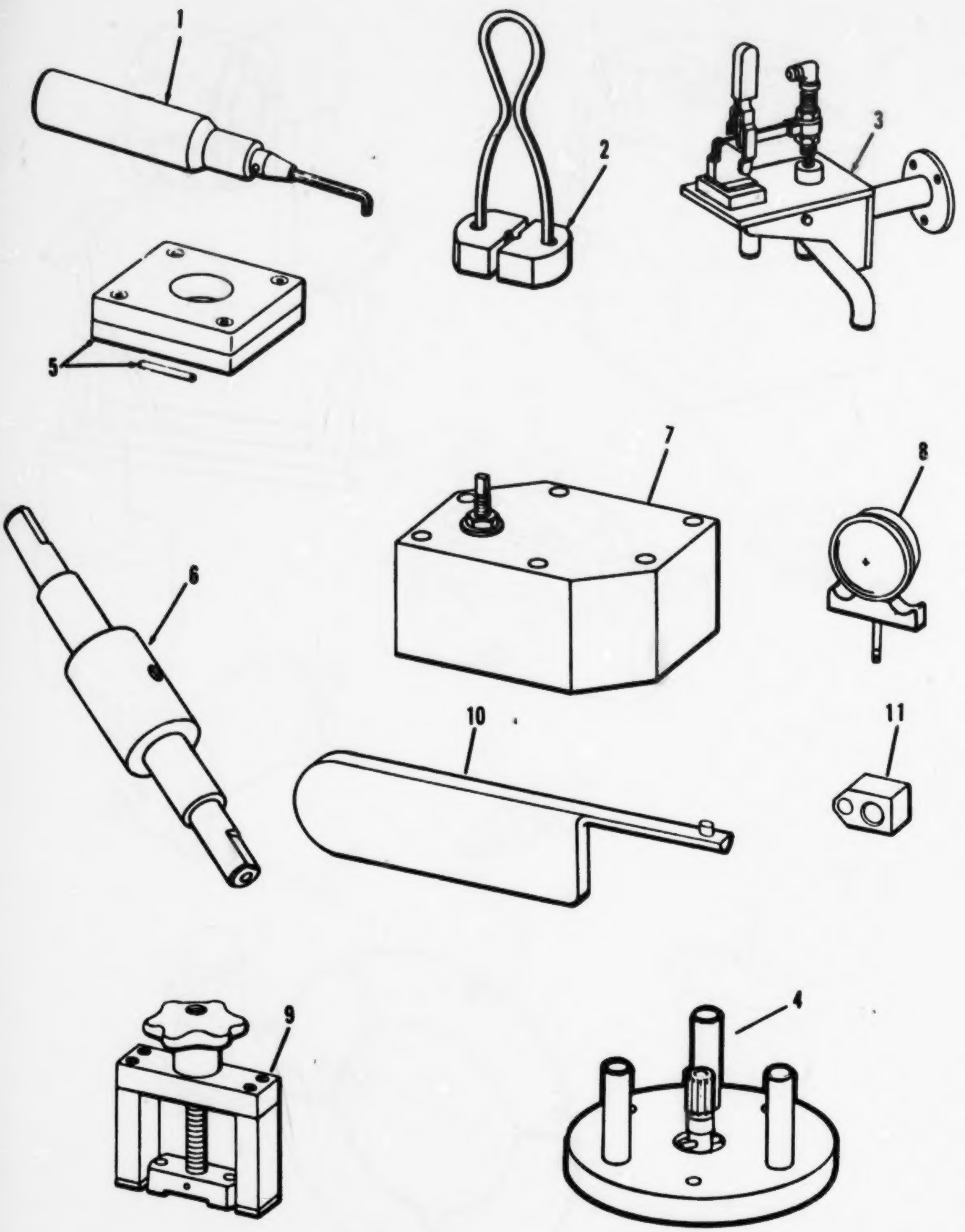

Figure E37. Engine Tools

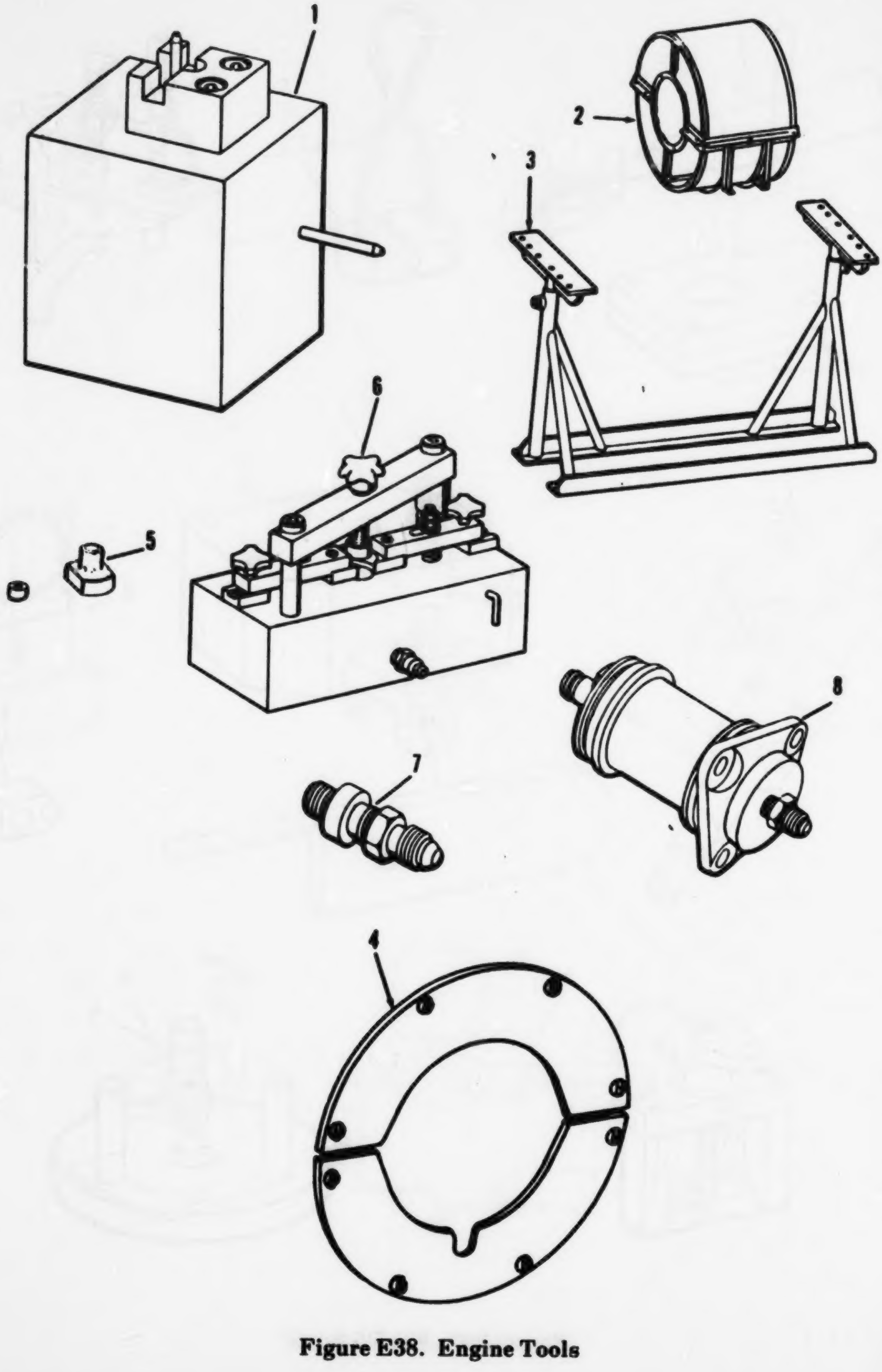

Figure E38. Engine Tools

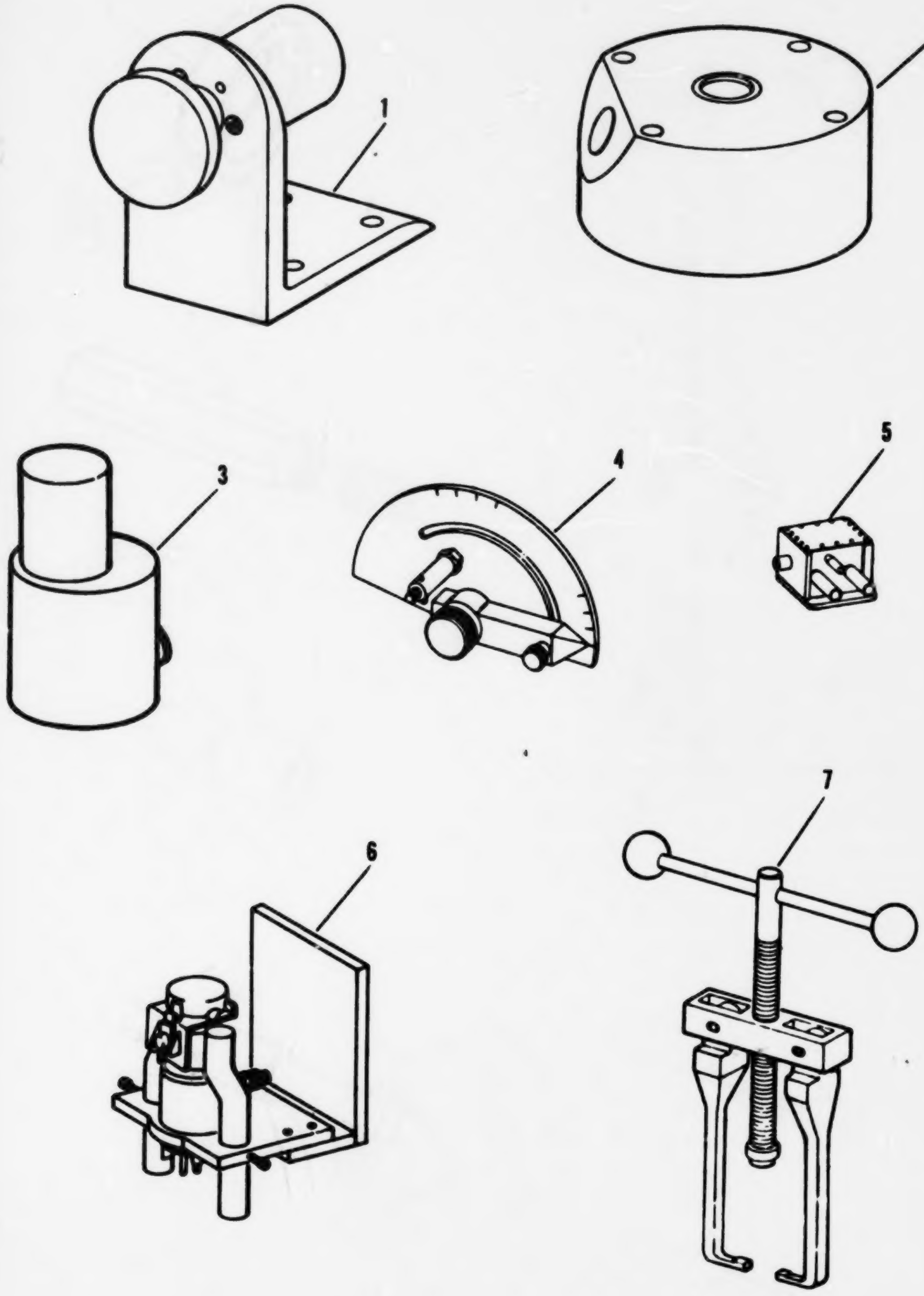

Figure E39. Engine Tools

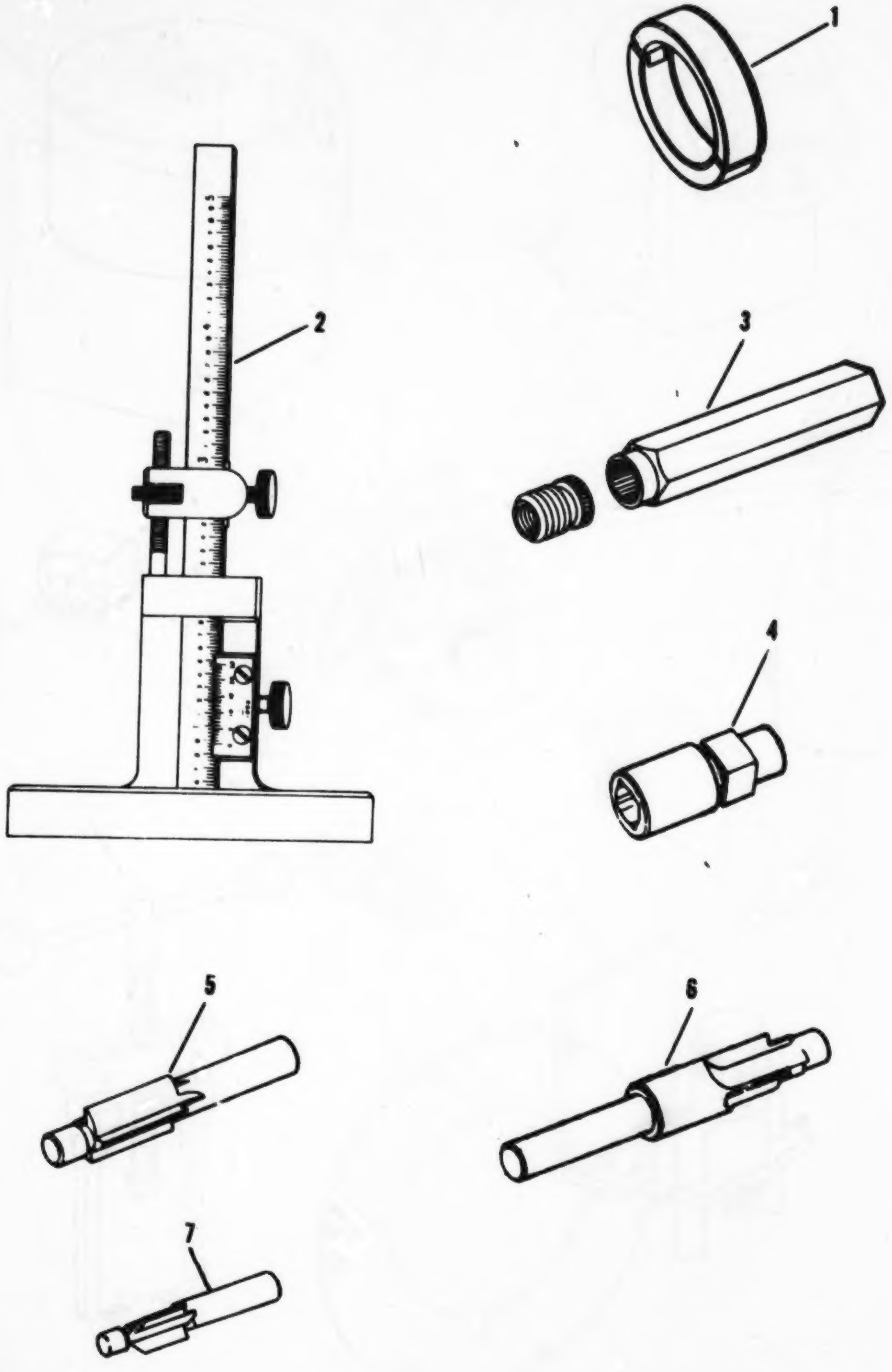

Figure E40. Engine Tools

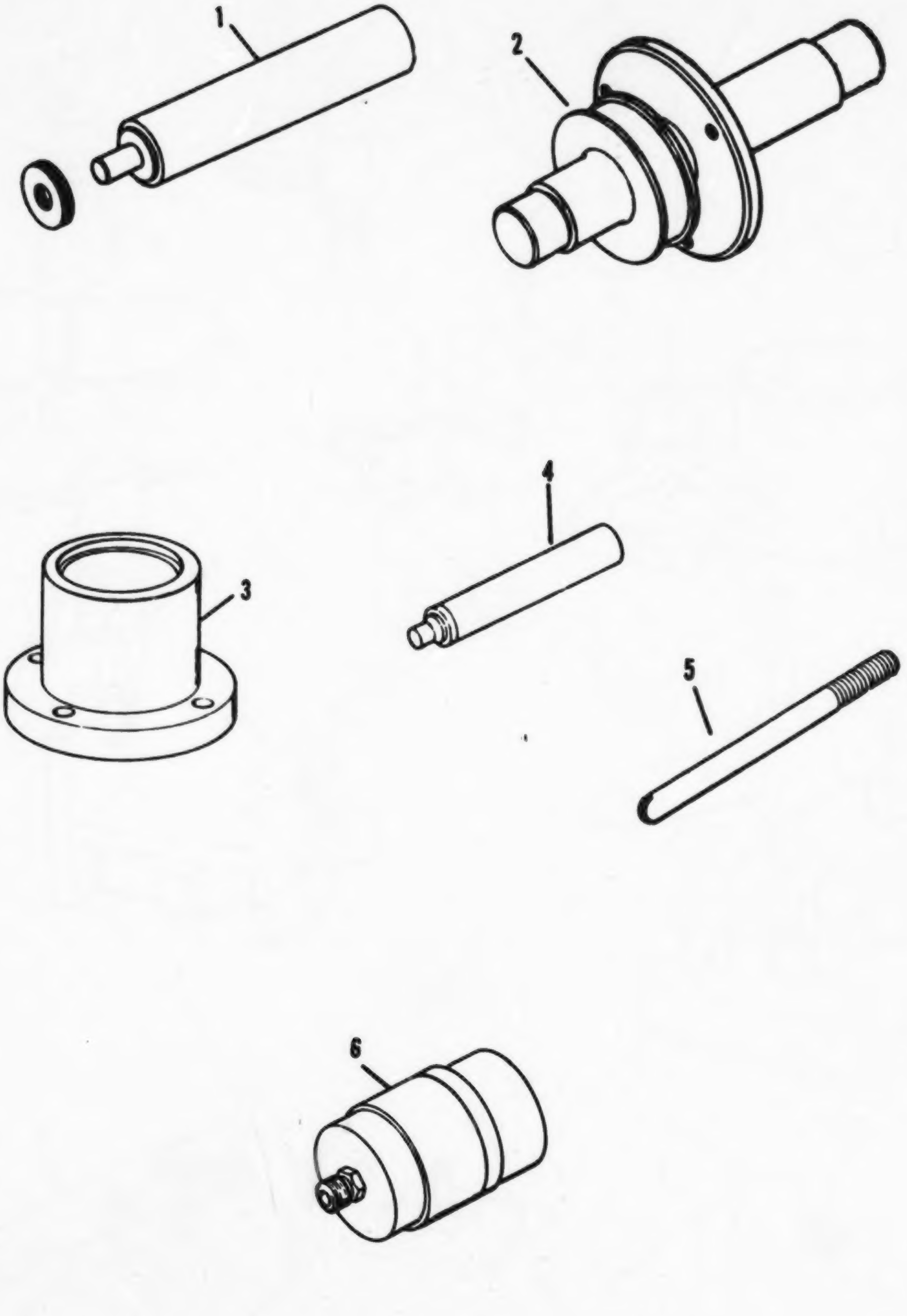

Figure E41. Engine Tools

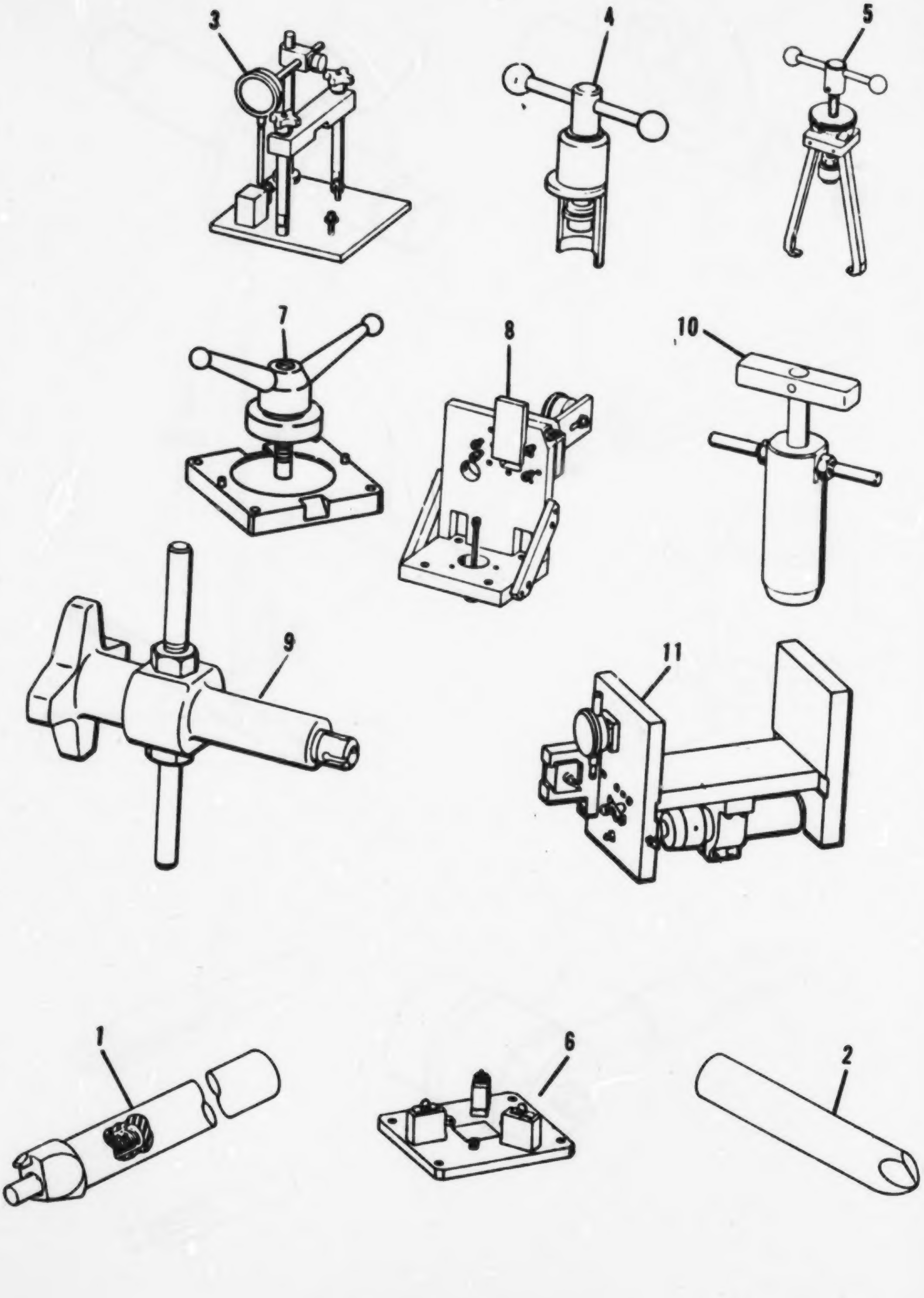

Figure E42. Engine Tools

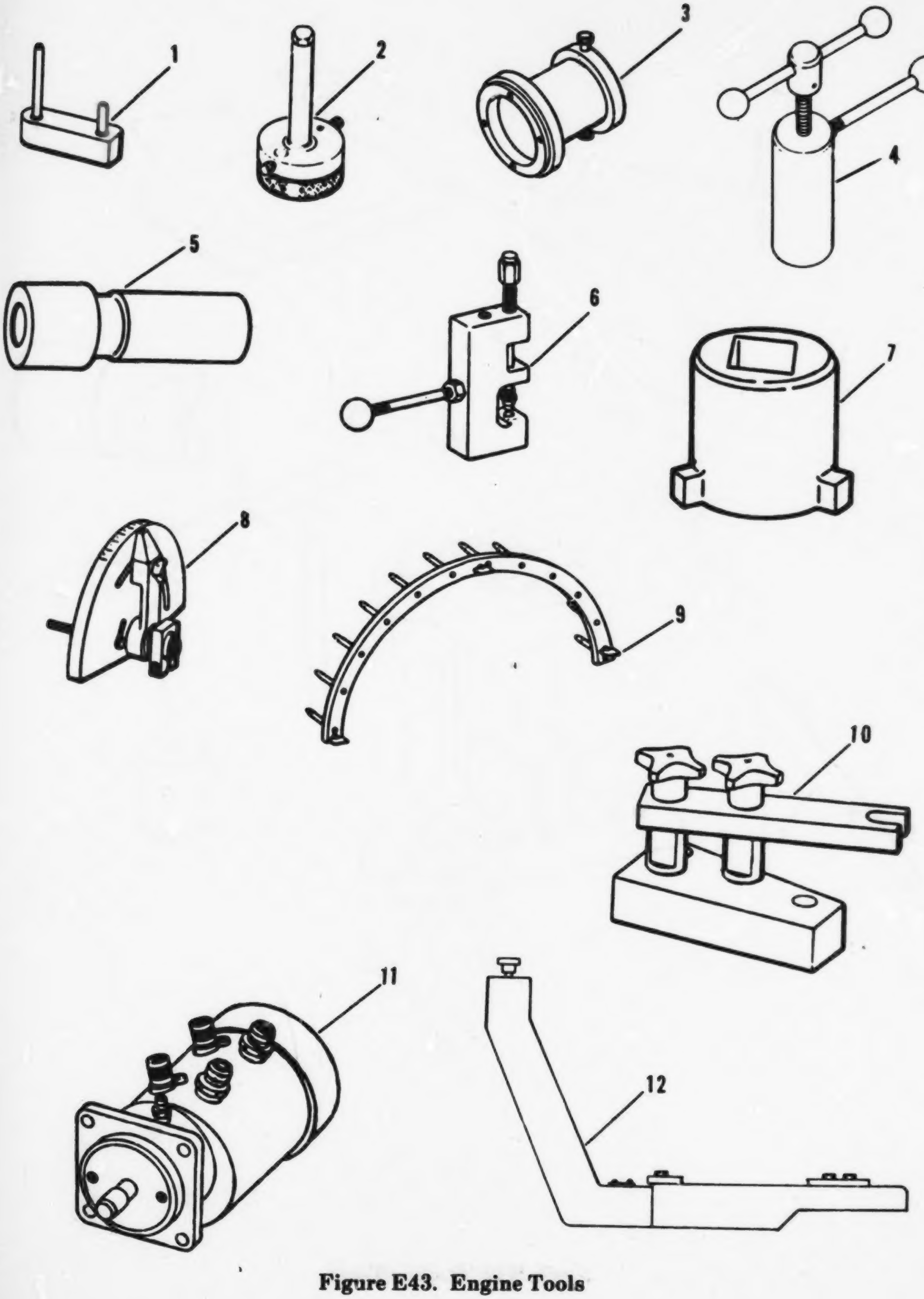

Figure E43. Engine Tools

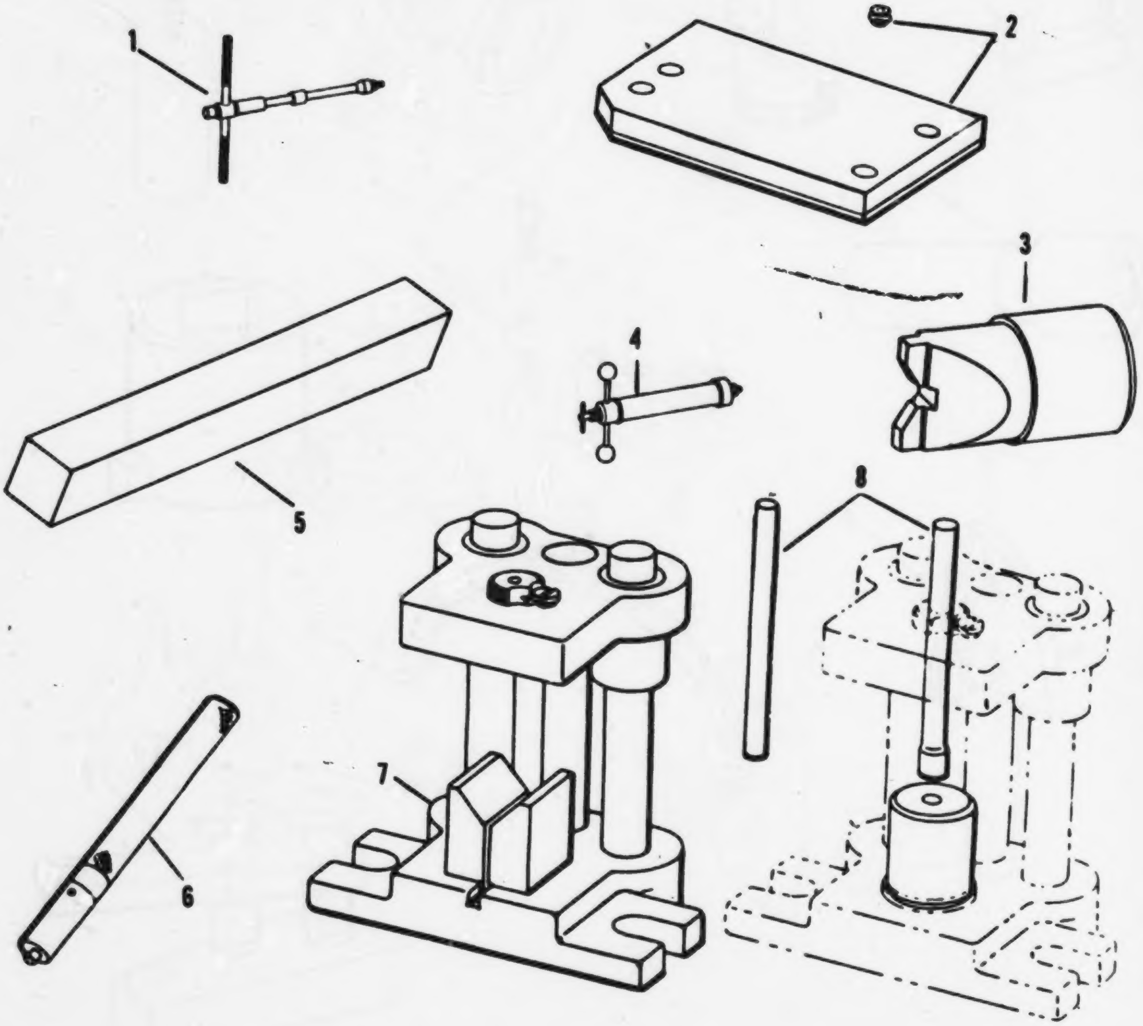

Figure E44. Engine Tools

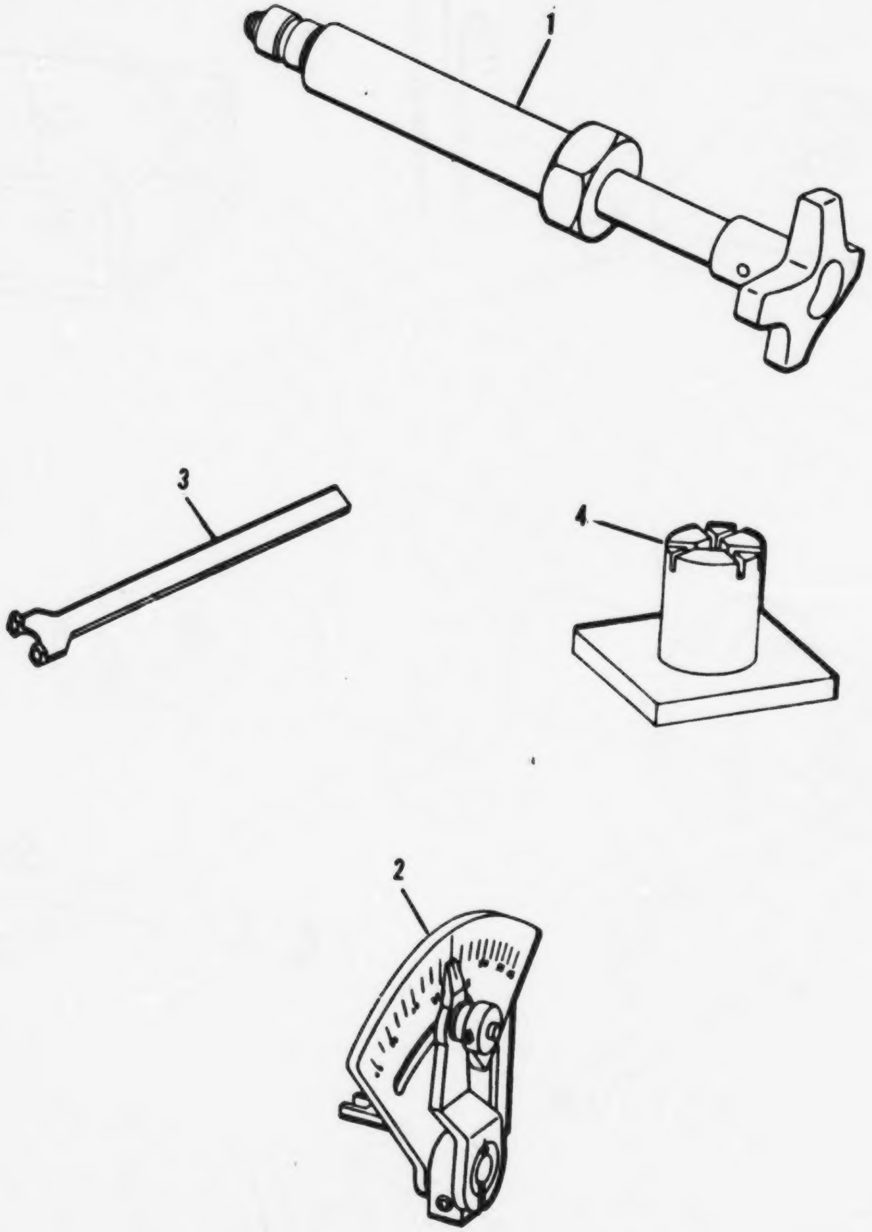

Figure E45. Engine Tools

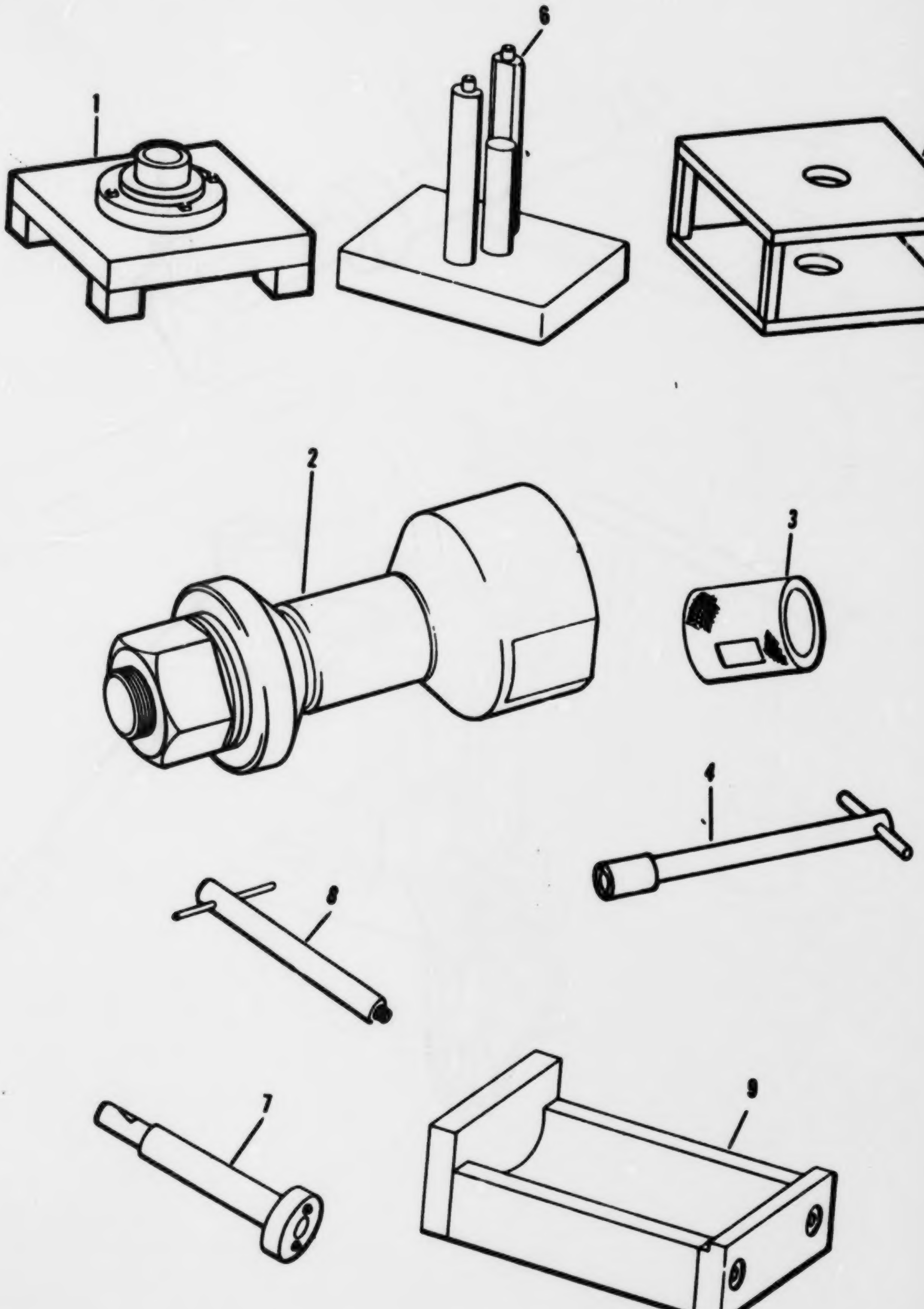

Figure E46. Engine Tools

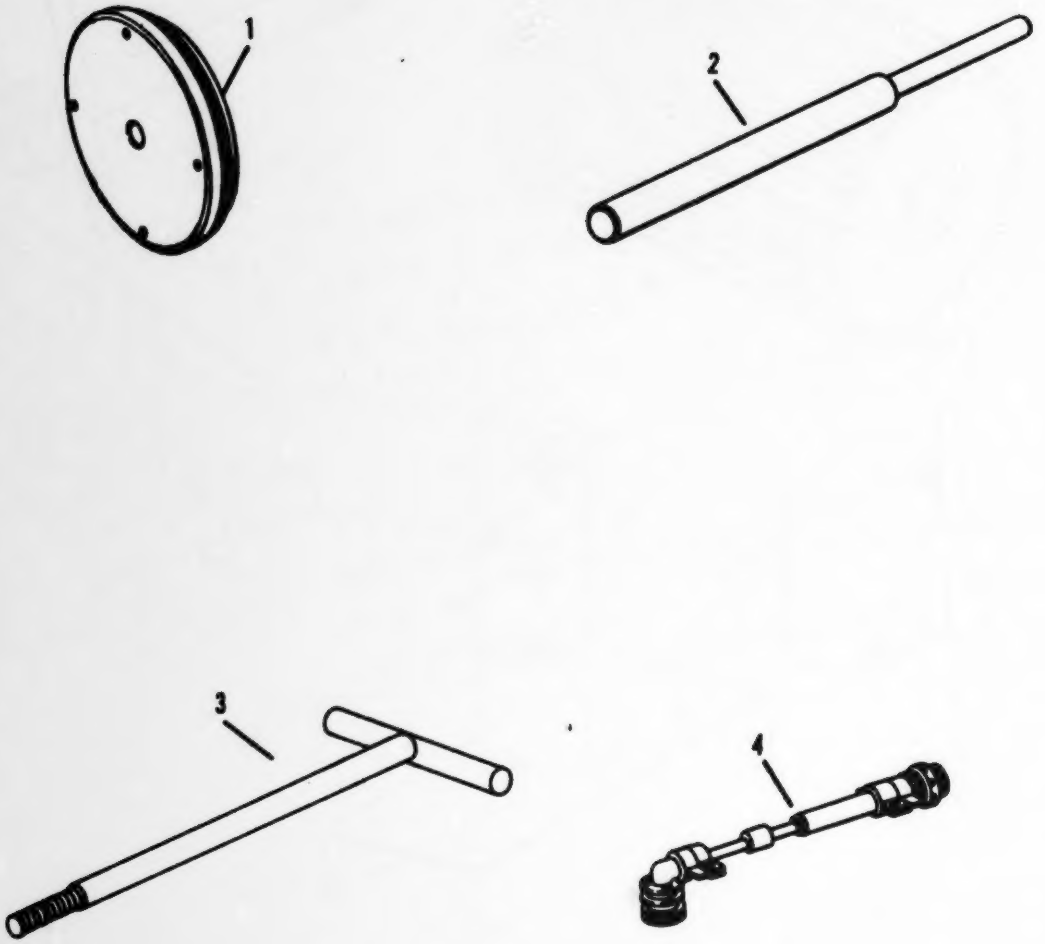

Figure E47. Engine Tools

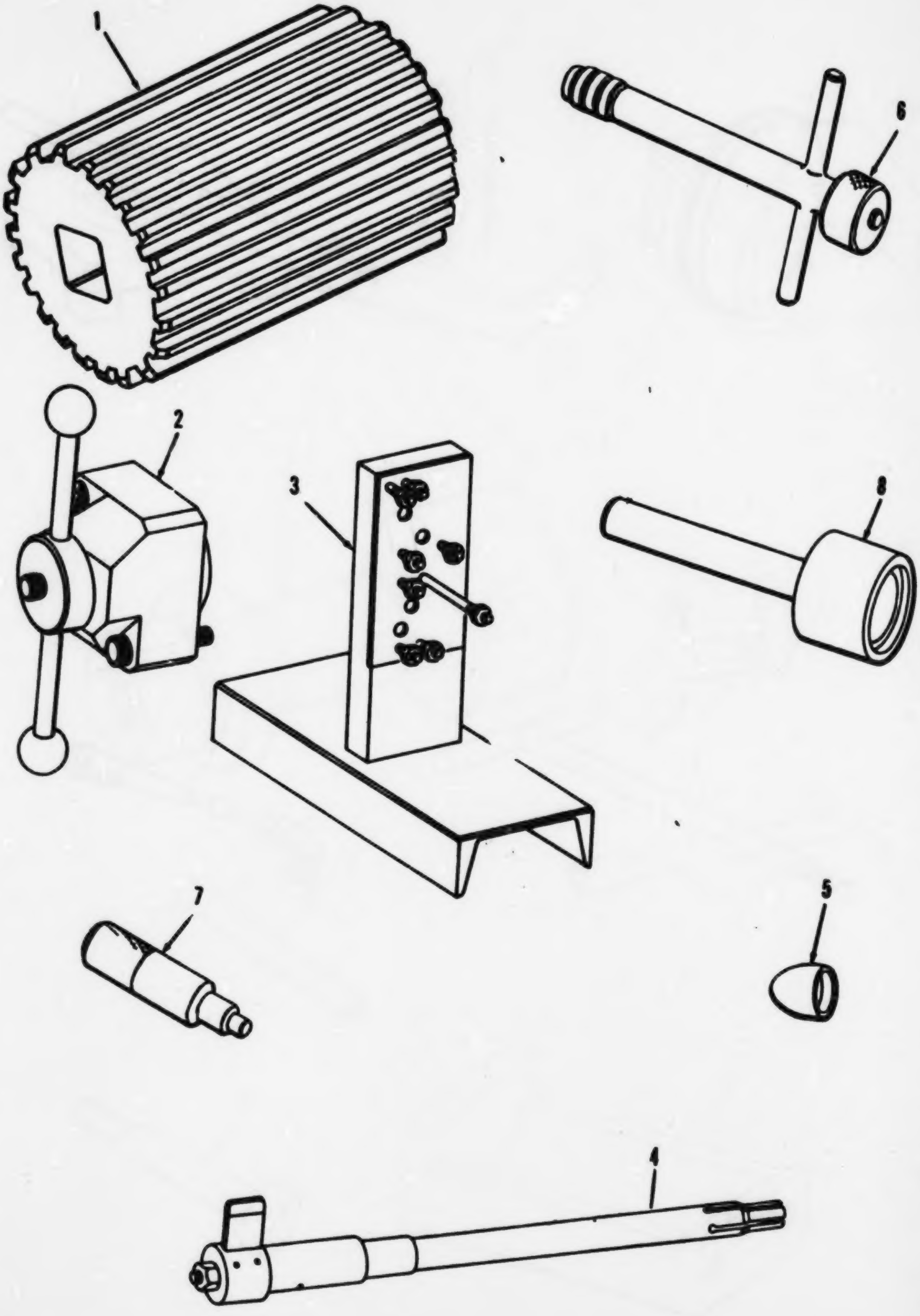

Figure E48. Engine Tools

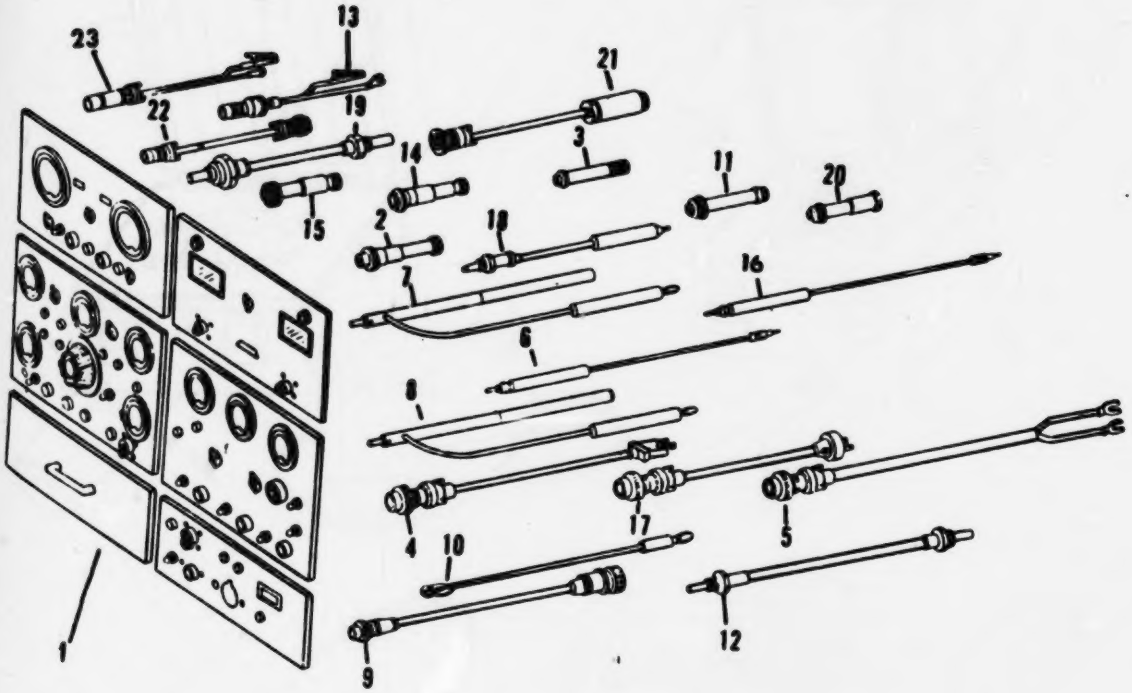

Figure E49. Engine Tools

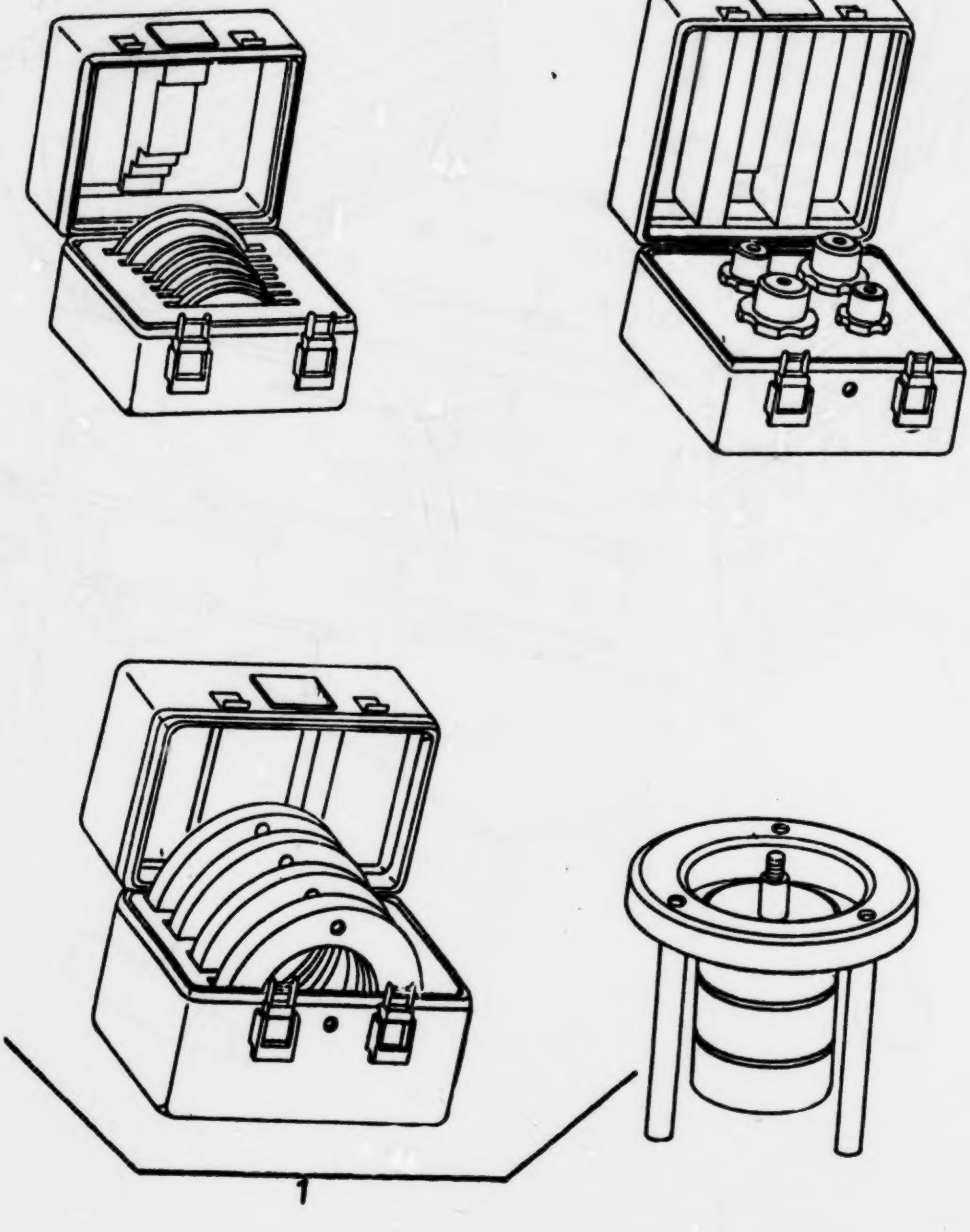

Figure E50. Engine Tools

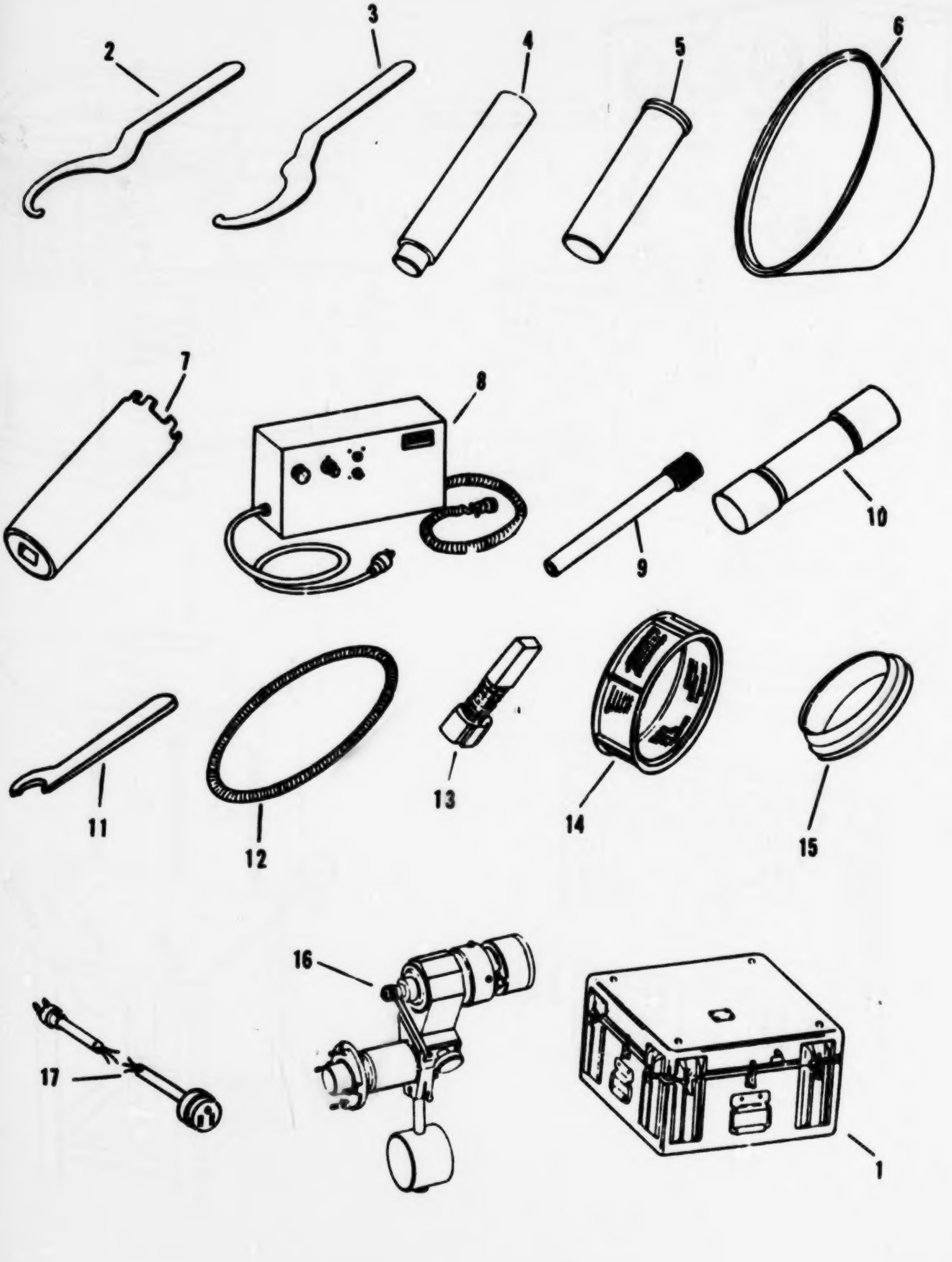

Figure E51. Engine Tools

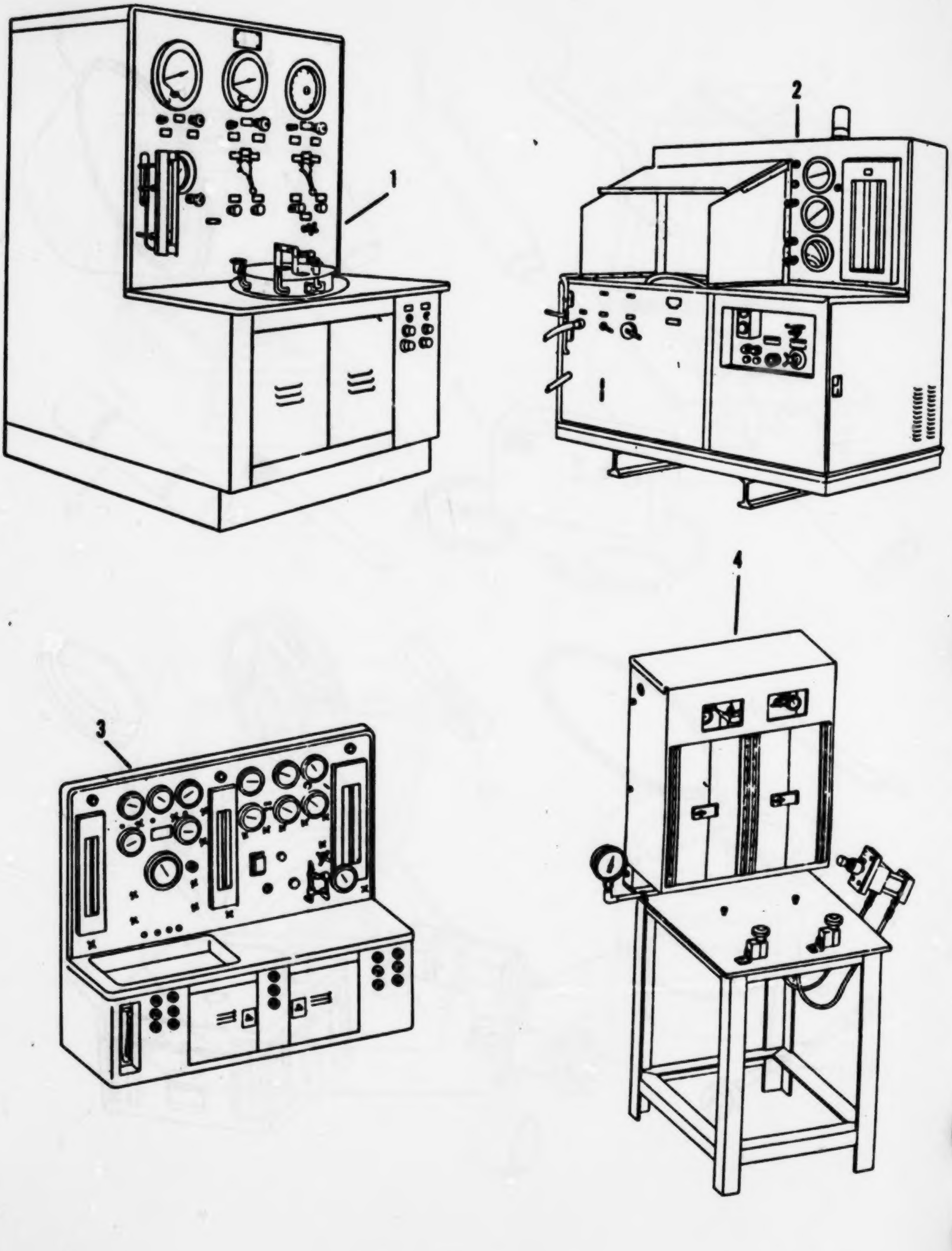

Figure E52. Engine Tools

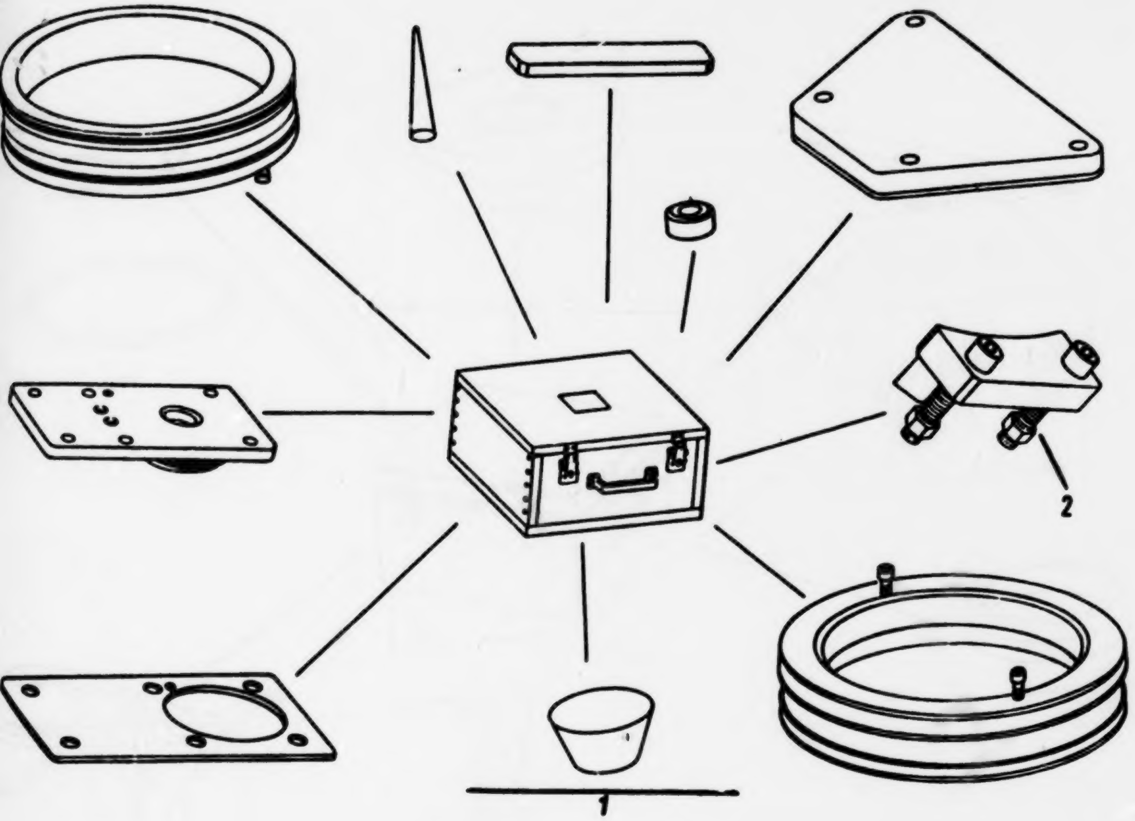

Figure E53. Engine Tools

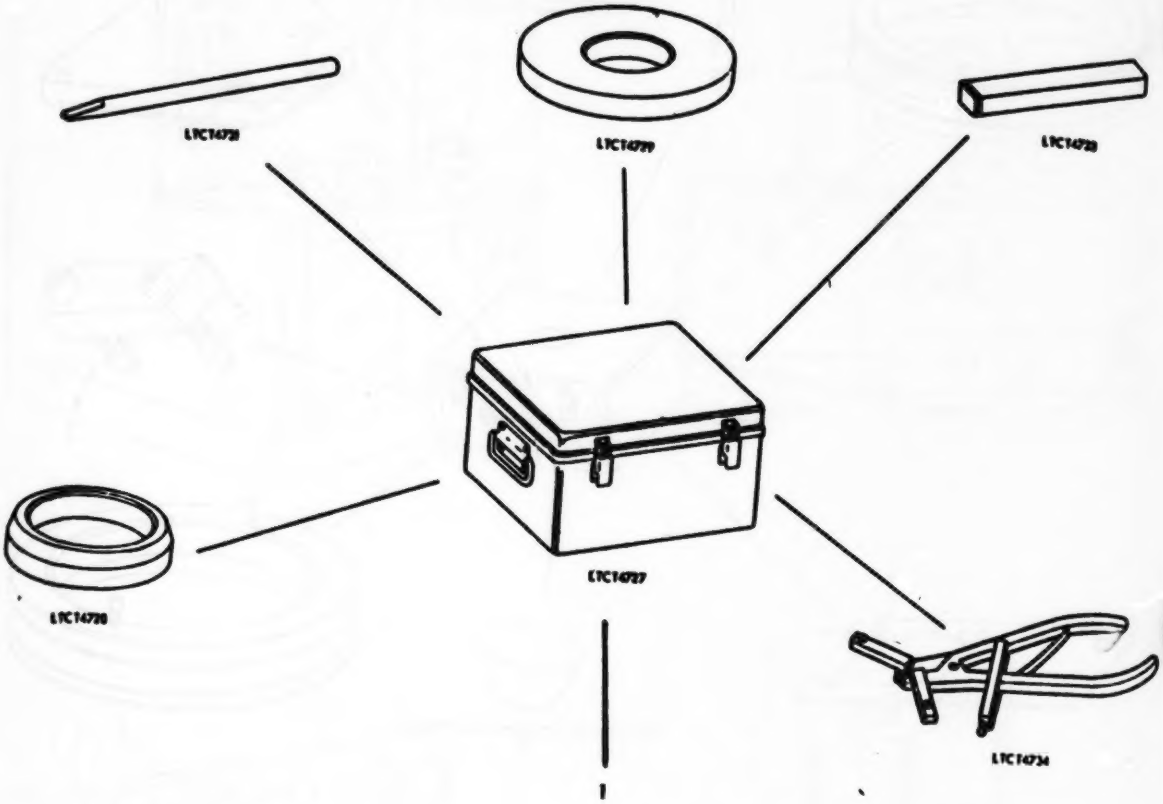

Figure E54. Engine Tools

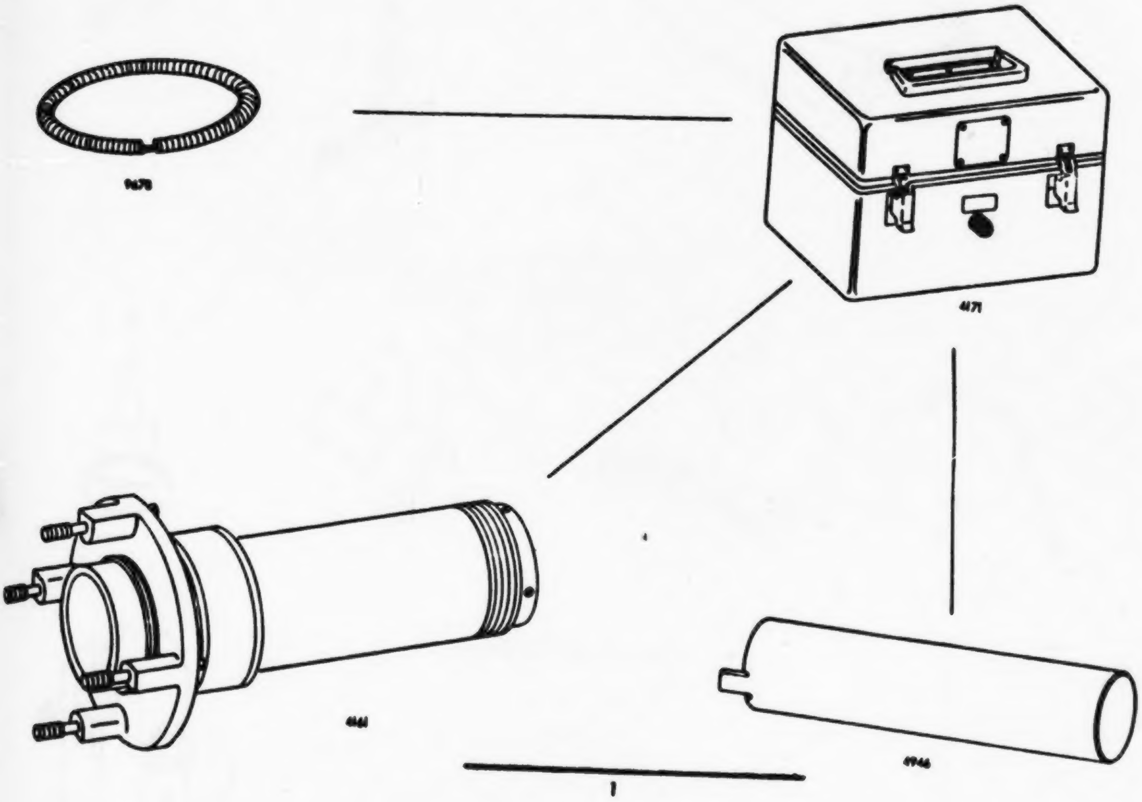

Figure E55. Engine Tools

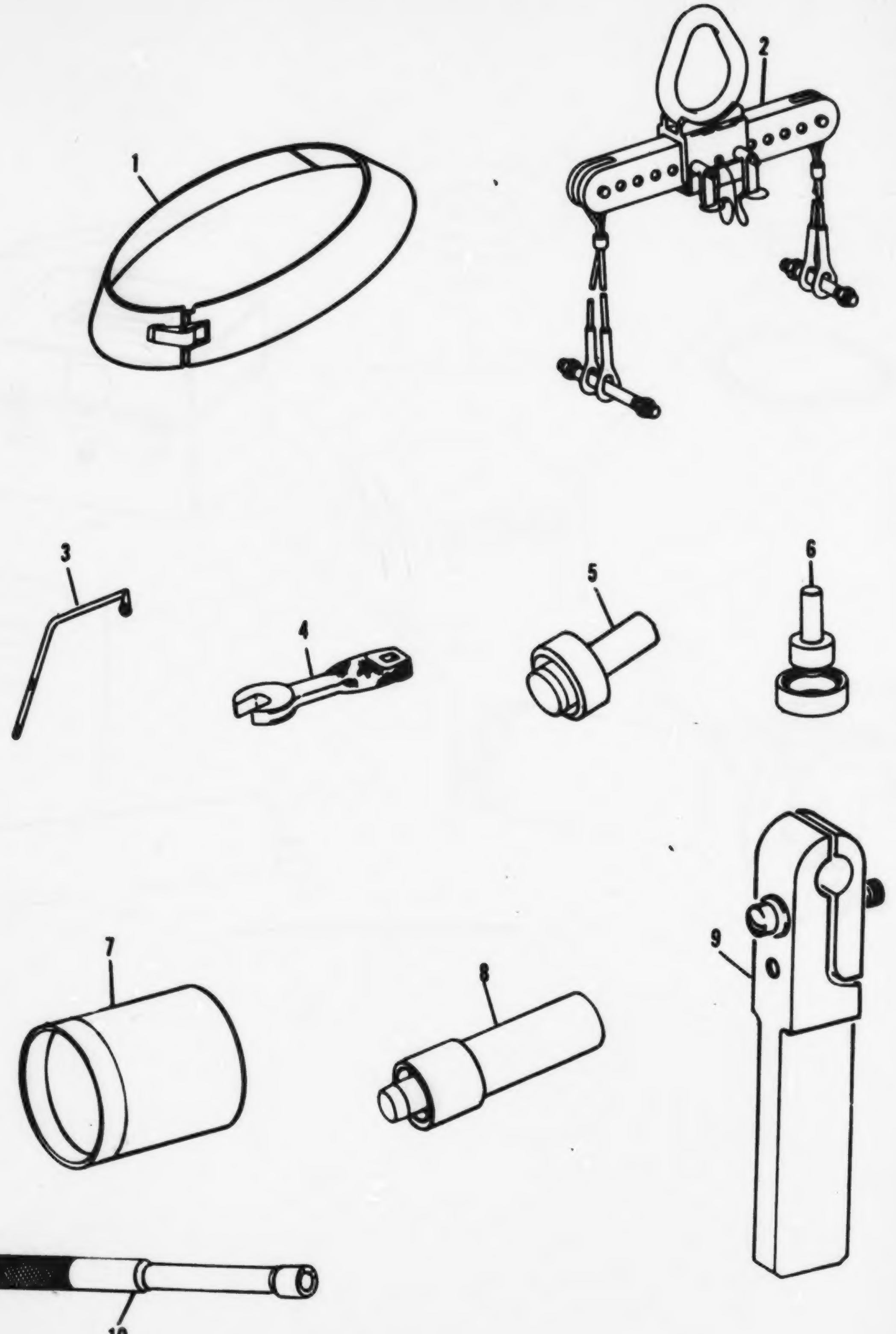

Figure E56. Engine Tools

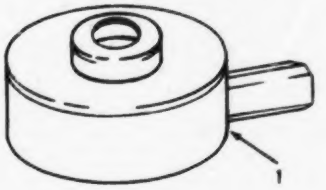

Figure E57. Engine Tools

STOCK NUMBER	FIGURE NO.	ITEM NO.	STOCK NUMBER	FIGURE NO.	ITEM NO.
4920-00-001-9343	E28	3	5365-00-016-2934	6	7
5365-00-003-1165	E51	15	5365-00-016-7350	35	18
5365-00-003-1165	5	67	5365-00-016-7350	36	10
4730-00-007-2122	19	78	5365-00-016-7356	35	18
4920-00-010-0404	E8	10	5365-00-016-7356	36	10
4920-00-010-0405	E8	3	5365-00-017-2675	5	12
4920-00-010-0407	E48	8	5365-00-017-2675	6	12
4920-00-010-0408	E48	5	3120-00-018-5429	16	39
4920-00-010-0409	E22	5	2840-00-019-8009	22	9
4920-00-010-0412	E44	6	4920-00-020-2687	E48	1
4920-00-010-0414	E44	8	5330-00-023-7623	27	38
4920-00-010-0415	E43	1	5310-00-025-7770	37	173
4920-00-010-0417	E43	10	5310-00-025-7770	38	171
4920-00-010-0419	E42	3	5310-00-025-7770	39	10
4920-00-010-0420	E42	8	4920-00-025-9074	E24	8
4920-00-010-0421	E42	11	3120-00-032-0040	49	23
4920-00-010-0425	E9	3	5120-00-034-1002	E44	3
4920-00-010-0426	E36	1	4920-00-034-5875	E17	5
4920-00-010-0427	E17	2	4920-00-034-5879	E30	11
4920-00-010-0428	E19	1	5120-00-034-5884	E30	13
4920-00-010-0429	E20	4	5120-00-034-6193	E56	4
4920-00-010-0431	E38	7	5340-00-036-9204	19	44
4920-00-010-0434	E37	7	5340-00-036-9204	24	10
4920-00-010-0435	E44	7	2915-00-038-4308	39	97
4920-00-010-0437	E9	6	2915-00-038-4308	43	12
4920-00-010-0438	E37	8	2915-00-038-4308	44	15
4920-00-010-0439	E37	11	2840-00-041-3420	17	39
4920-00-010-0458	E31	2	5136-00-043-4139	E30	13
4920-00-010-0459	E32	2	5365-00-044-2854	3	34
4920-00-010-5467	E6	2	5330-00-045-9714	25	16
4920-00-010-5500	E45	1	5920-00-050-4553	BULK	
3020-00-010-5511	9	40	5330-00-051-7034	BULK	
3020-00-010-5512	9	37	5365-00-051-9777	39	57
4920-00-010-5521	E37	10	5365-00-051-9777	41	124
4920-00-010-5522	E37	5	5307-00-051-9781	28	14
4920-00-010-7328	E30	6	9905-00-052-4352	61	2
4920-00-010-7337	E8	4	4810-00-052-4354	61	19
4920-00-010-7345	E38	8	4810-00-052-4355	61	14
4920-00-010-7353	E16	7	4810-00-052-4356	61	16
4920-00-010-7355	E17	1	5360-00-052-4358	61	17
2840-00-010-7864	17	15	2915-00-052-4435	50	18
4920-00-011-8510	E45	11	5315-00-052-8034	41	17
4920-00-011-8538	E49	12	5315-00-052-8036	41	50
4920-00-011-8940	E27	6	5305-00-052-8874	60	17
2840-00-012-3283	29	50	2840-00-053-1676	23	7
2840-00-012-3284	21	26	5120-00-053-2603	E5	3
4920-00-012-4615	E32	3	2840-00-054-3575	17	55
4920-00-012-4622	E37	6	5365-00-054-3603	17	50
2915-00-012-8172	39	44	5365-00-054-3604	17	49
5315-00-013-8505	19	41	2840-00-054-3608	6	60
5970-00-013-8509	56	2	2840-00-054-8712	6	62
5365-00-014-5867	25	28	2915-00-054-8853	48	2
2840-00-015-6534	5	14	5340-00-055-2344	56	11
2840-00-015-6535	5	11	5305-00-055-2797	19	9
2840-00-015-6935	6	11	5305-00-055-2797	27	91
2840-00-015-6536	5	8	2915-00-056-0528	35	65
2840-00-015-6536	6	8	2915-00-056-0529	41	172
5120-00-015-6557	E9	8	2915-00-056-2349	37	27
5120-00-015-6958	E35	2	2915-00-056-2349	38	19
3110-00-016-1579	37	160	2915-00-056-7085	47	33
3110-00-016-1579	38	157	2915-00-056-7088	37	172
5365-00-016-2894	5	7	2915-00-056-7088	38	170
5365-00-016-2894	6	7	5306-00-056-8240	27	3
5365-00-016-2915	5	7	5340-00-056-9785	BULK	
5365-00-016-2915	6	7	5340-00-056-9804	BULK	
5365-00-016-2916	5	7	5330-00-056-9810	BULK	
5365-00-016-2916	6	7	5355-00-057-1866	48	4
5365-00-016-2917	5	7	4720-00-057-4167	11	16
5365-00-016-2917	6	7	3120-00-058-0461	16	25
5365-00-016-2918	5	7	5315-00-058-6079	28	5
5365-00-016-2918	6	7	5315-00-058-9658	27	150
5365-00-016-2919	5	7	5365-00-059-3119	39	49
5365-00-016-2919	6	7	5310-00-059-9268	20	11
5365-00-016-2921	5	7	5310-00-059-9268	60	10
5365-00-016-2921	6	7	5330-00-061-2724	29	14
5365-00-016-2923	5	7	5306-00-061-7219	4	8
5365-00-016-2923	6	7	5306-00-061-7219	10	13
5365-00-016-2533	5	7	5120-00-062-0107	F14	7
5365-00-016-2933	6	7	2840-00-062-4405	30	23
5365-00-016-2934	5	7	2840-00-062-4406	30	24

STOCK NUMBER	FIGURE NO.	ITEM NO.
5365-00-063-0804	35	19
5365-00-063-0804	36	10
2840-00-064-9335	BULK	
2840-00-064-9427	20	20
2840-00-064-9428	20	19
2840-00-064-9429	20	21
2840-00-064-9430	20	22
2840-00-064-9432	50	19
5365-00-064-9434	4	12
5365-00-064-9434	33	10
2925-00-064-9435	55	13
5310-00-064-9437	26	4
5310-00-064-9438	26	6
4920-00-065-0658	E32	1
5305-00-065-1461	61	3
5315-00-065-3436	37	78
5315-00-065-3436	43	78
4320-00-065-5501	62	19
4820-00-065-5502	62	2
4320-00-065-5503	62	30
4320-00-065-5504	62	23
4320-00-065-5505	62	10
4320-00-065-5507	62	36
4320-00-065-5508	62	32
3120-00-065-5533	62	28
3120-00-065-5534	62	26
3120-00-065-5535	62	33
3120-00-065-5536	62	21
5307-00-066-0562	28	4
5310-00-066-4289	14	21
5365-00-066-5279	17	41
5365-00-067-7358	32	25
4320-00-067-8128	67	1
5340-00-067-8304	3	8
3120-00-067-8320	E29	7
3120-00-067-8321	E29	7
3120-00-067-8324	E29	7
3120-00-067-8326	E29	7
3120-00-067-8328	E29	7
3120-00-067-8329	E29	7
3120-00-067-8330	E29	7
5120-00-067-8331	E29	2
5330-00-067-9554	65	15
5330-00-068-4382	8	7
5330-00-068-4382	32	15
5305-00-068-5398	66	20
5305-00-068-5414	24	17
5305-00-068-5414	25	8
4810-00-068-6712	59	1
4810-00-068-6712	61	1
4720-00-069-1525	11	11
4720-00-069-1525	12	1
4920-00-070-1162	E29	6
2915-00-070-6839	35	26
2915-00-070-6839	36	18
5305-00-071-1320	15	39
5305-00-071-1320	24	2
5305-00-071-1320	30	19
4920-00-071-4553	E29	9
4920-00-071-4555	E29	8
4920-00-071-4556	E56	6
3110-00-071-4568	5	56
3110-00-071-4568	24	37
3120-00-071-4569	E29	7
3120-00-071-4571	E29	7
3120-00-071-8260	E29	7
3120-00-071-8261	E29	7
3120-00-071-8263	E29	7
3120-00-071-8264	E29	7
2925-00-072-1060	37	29
2925-00-072-1060	38	26
2915-00-072-4411	52	17
2915-00-072-4411	53	16
3120-00-072-4876	20	6
2840-00-072-5651	16	48
5330-00-072-9704	16	31
5120-00-073-8321	E51	3
4920-00-073-8508	E51	4
2915-00-074-3369	20	5
4920-00-075-0025	E35	6
2915-00-075-1182	37	15
2915-00-075-1182	38	11
5360-00-075-1183	37	16
5360-00-075-1183	38	12
2915-00-075-1184	37	14
2915-00-075-1184	38	10
2915-00-075-1185	37	13
2915-00-075-1185	38	9
5360-00-075-1187	37	28
5360-00-075-1187	38	25
5340-00-076-5006	16	31
4920-00-076-5053	E10	4
4920-00-078-2410	E31	1
5330-00-078-5533	51	7
5330-00-078-5533	51	14
5315-00-079-2464	30	93
5330-00-079-2672	29	14
4920-00-079-8816	E34	2
5945-00-079-8822	E51	9
4920-00-079-8885	E51	17
5306-00-079-5561	29	1
3110-00-080-7606	27	30
2915-00-081-3502	43	42
2915-00-081-3502	44	48
4810-00-081-5670	60	1
5120-00-082-0408	E51	7
3120-00-082-0429	E51	5
2840-00-082-0453	6	29
2840-00-082-0466	6	22
4920-00-083-0410	E37	1
5120-00-083-2834	E36	6
5310-00-083-8364	29	34
5310-00-083-8364	32	23
5310-00-083-8364	67	9
2840-00-084-7761	20	12
4920-00-085-2340	E28	8
2840-00-085-2880	22	10
2840-00-085-7396	16	32
5360-00-087-3459	13	32
4810-00-087-7692	52	16
4810-00-087-7692	53	15
5330-00-088-0007	56	7
5310-00-088-0551	57	16
5310-00-088-0551	58	14
9905-00-088-0774	30	2
3120-00-088-1790	41	177
5315-00-088-1937	39	31
5315-00-088-1937	41	61
5315-00-088-2551	30	27
5330-00-088-3047	39	47
4720-00-088-6192	63	7
5365-00-088-7902	24	33
5365-00-088-7903	24	33
5365-00-088-7904	24	33
5365-00-088-7905	24	33
5365-00-088-7906	24	33
5365-00-088-7908	24	33
5365-00-088-7909	24	33
5365-00-088-7911	24	33
5310-00-088-8008	13	18
5365-00-088-8021	24	33
5365-00-088-8022	24	33
5365-00-088-8023	24	33
5365-00-088-8024	24	33
5365-00-088-8025	24	33
5365-00-088-8026	24	33
5365-00-088-8027	24	33
5365-00-088-8028	24	33
5365-00-088-8029	24	33
3020-00-088-8872	49	26
5310-00-089-0183	41	16
5315-00-089-1367	47	39
5315-00-089-1367	48	67
4920-00-089-2295	E43	9
5360-00-089-3015	41	11
5305-00-089-3105	39	8
5310-00-089-7208	17	71
5307-00-091-9220	19	42
3120-00-100-4365	49	23
4920-00-102-6642	E10	5

STOCK NUMBER	FIGURE NO.	ITEM NO.
4920-00-102-6843	E10	6
4920-00-102-6844	E10	6
2840-00-102-8542	7	33
5365-00-103-5870	16	57
5365-00-103-5870	17	64
4920-00-103-9465	E10	6
4920-00-103-9467	E10	6
4920-00-103-9468	E10	6
5120-00-104-6764	E7	5
5120-00-104-6817	E7	6
5120-00-104-9028	E7	7
5305-00-105-0530	3	32
5305-00-105-0531	15	9
2945-00-105-3010	18	5
2840-00-105-3011	19	18
4920-00-105-3033	E3	2
5365-00-105-3887	9	50
2840-00-105-9321	9	52
4920-00-106-0049	E14	4
2840-00-106-0067	19	53
2840-00-106-0072	19	54
4920-00-106-0074	E8	12
5935-00-106-0096	58	6
2840-00-106-2356	19	55
2840-00-106-2360	19	52
5330-00-110-8521	59	14
4810-00-111-3012	61	9
4810-00-111-3013	61	11
4810-00-111-3014	61	4
4810-00-111-3019	61	8
4810-00-111-3020	61	7
5330-00-111-3713	30	6
4810-00-111-5356	61	13
7690-00-112-8981	BULK	
5360-00-113-0918	61	12
4920-00-113-9813	E39	3
5307-00-115-4775	17	52
5310-00-115-6212	3	2
5133-00-116-2774	E40	7
5133-00-116-2793	E2	12
5133-00-116-2800	E40	5
5133-00-116-2820	E40	5
2915-00-116-5488	20	9
4920-00-119-1074	E9	7
4920-00-119-1075	E8	1
4920-00-119-1076	E8	6
4920-00-119-1077	E8	7
5306-00-121-2305	16	61
5306-00-121-2305	17	69
2840-00-121-6640	68	
4920-00-124-7971	E3	10
5280-00-129-6099	E50	1
5320-00-129-9706	19	35
2840-00-130-5960	29	40
5220-00-131-1995	E6	4
5220-00-132-4930	E6	8
5120-00-132-4931	E7	9
5310-00-133-1251	17	38
4710-00-134-0063	52	11
4820-00-134-1113	52	5
2915-00-134-1114	52	4
2840-00-134-4994	25	12
5330-00-134-5131	17	59
2840-00-134-7672	23	8
3465-00-134-8054	E36	4
3465-00-134-8055	E36	5
3415-00-134-8128	E26	7
4920-00-136-1270	E11	8
4920-00-136-1271	E11	9
5120-00-136-4993	E11	6
5310-00-141-1795	3	39
5310-00-141-1795	29	9
3110-00-141-3751	41	31
9510-00-142-6484	BULK	
5306-00-143-2297	27	27
5330-00-143-8490	17	40
5330-00-143-8648	27	41
5330-00-143-8769	23	23
5365-00-144-6563	9	2
5365-00-144-6563	51	2

STOCK NUMBER	FIGURE NO.	ITEM NO.
5305-00-145-0999	34	23
5305-00-145-0999	37	144
5305-00-145-0999	38	143
2840-00-145-7961	27	36
5310-00-146-2501	39	13
5310-00-146-2501	41	104
5310-00-146-2501	43	4
5310-00-146-2501	44	6
5310-00-146-2501	45	4
5310-00-146-2501	46	4
5315-00-150-3635	5	64
5315-00-150-3635	19	64
5315-00-150-3635	23	19
5315-00-150-3635	24	7
5315-00-150-3635	24	19
5315-00-150-3635	25	33
5305-00-150-9211	BULK	
5305-00-150-9212	11	8
5305-00-150-9212	12	5
5305-00-150-9212	14	6
5305-00-150-9212	33	2
5305-00-150-9212	52	12
5305-00-150-9212	53	8
5305-00-150-9212	55	3
5305-00-150-9212	56	13
5305-00-150-9212	57	3
5305-00-150-9212	58	8
5305-00-150-9212	63	2
5305-00-150-9212	64	8
5305-00-150-9213	12	3
5305-00-150-9213	58	7
5305-00-150-9269	37	59
5305-00-150-9269	38	58
5340-00-151-5941	BULK	
5340-00-151-5943	BULK	
5340-00-151-5971	BULK	
5340-00-151-5979	BULK	
5340-00-151-5980	BULK	
5340-00-151-5981	BULK	
5365-00-151-7153	BULK	
5365-00-151-7155	BULK	
5365-00-151-7210	BULK	
5340-00-151-7309	BULK	
5210-00-152-0104	E5	10
5120-00-152-1990	E5	13
5120-00-152-1992	E5	11
5120-00-152-1993	E5	12
5120-00-156-8671	E41	5
4920-00-156-8702	E41	2
4920-00-156-8707	E41	3
5365-00-156-8958	16	59
5365-00-156-8958	17	66
2840-00-157-2374	5	40
2840-00-157-2375	5	35
2840-00-157-2519	17	4
5330-00-165-1936	5	6
5330-00-165-1936	6	6
5330-00-165-1936	29	42
5330-00-165-1950	13	8
5330-00-166-1098	BULK	
5330-00-166-1099	BULK	
5310-00-167-0685	3	5
5310-00-167-0725	37	75
5310-00-167-0725	38	74
5310-00-167-0805	52	30
5310-00-167-0805	53	19
5310-00-167-0812	3	17
5310-00-167-0812	35	31
5310-00-167-0812	36	28
5310-00-167-0812	37	98
5310-00-167-0812	38	97
5310-00-167-0812	41	52
5310-00-167-0814	30	48
5310-00-167-0814	47	22
5310-00-167-0814	48	33
5310-00-167-0818	67	3
5310-00-167-0820	10	17
5310-00-167-0821	BULK	
5310-00-167-0834	9	27

STOCK NUMBER	FIGURE NO.	ITEM NO.
5310-00-167-0834	10	3
5310-00-167-0834	13	16
5310-00-167-0834	14	20
5310-00-167-0834	15	3
5310-00-167-0834	33	18
5310-00-167-0834	34	28
5310-00-167-0835	3	13
5310-00-167-0835	4	6
5310-00-167-0835	8	4
5310-00-167-0835	10	11
5310-00-167-0835	13	12
5310-00-167-0835	14	17
5310-00-167-0835	27	5
5310-00-167-0835	27	99
5310-00-167-0835	59	6
5310-00-167-0835	67	8
5310-00-167-0836	29	44
5310-00-167-0836	33	33
5310-00-167-0836	34	30
5310-00-167-0837	7	9
5310-00-167-0837	10	10
5310-00-167-0837	18	23
5310-00-167-0837	27	15
5310-00-167-1344	37	168
5310-00-167-1344	38	166
5310-00-167-1344	41	40
5330-00-167-5126	30	4
5330-00-167-5135	13	9
5120-00-168-2166	E15	2
2840-00-168-2499	20	30
5307-00-168-2926	28	2
5330-00-168-5581	E8	2
2840-00-168-9850	5	30
5120-00-169-0122	E2	10
5120-00-169-0123	E2	10
5120-00-169-0124	E40	4
4920-00-169-2876	E6	7
5306-00-174-3863	16	29
5360-00-176-0860	23	24
2840-00-176-3579	23	25
2840-00-176-3745	6	51
2840-00-176-3746	6	32
2840-00-176-3750	6	30
2840-00-176-3751	6	48
2840-00-176-3752	6	46
2840-00-176-3756	6	42
2840-00-176-3758	6	45
2840-00-176-3759	6	41
2840-00-176-3773	6	43
2840-00-176-3780	6	26
2840-00-176-3782	6	40
2840-00-176-3788	6	27
2840-00-176-3789	6	47
2840-00-176-3791	6	44
4320-00-176-4119	62	22
4320-00-176-4132	62	29
5310-00-176-6179	6	50
5310-00-176-6179	6	53
4920-00-176-8410	E36	3
4920-00-176-8420	E47	1
4920-00-176-8421	E1	10
5306-00-177-5558	3	38
5306-00-177-5558	13	11
5306-00-177-5558	56	24
5306-00-177-5558	59	5
5306-00-177-5558	64	19
5305-00-177-5656	35	51
5305-00-177-5656	36	45
5306-00-177-5712	6	49
5306-00-177-5712	6	52
5306-00-177-5723	6	23
5133-00-177-7268	E35	9
5133-00-177-7269	E35	9
5120-00-177-9529	E41	4
4920-00-178-0827	E52	
4920-00-178-0828	E52	
4920-00-178-0829	E52	
5120-00-178-0977	E2	9
5365-00-178-1455	23	32
5330-00-179-1224	9	25

STOCK NUMBER	FIGURE NO.	ITEM NO.
5330-00-179-4207	52	32
5306-00-180-3379	BULK	
5306-00-180-3384	59	4
5340-00-181-1225	6	28
5340-00-181-1669	52	8
3465-00-181-2744	E4	10
3465-00-181-2745	E4	10
8135-00-181-7456	BULK	
5306-00-182-2016	27	102
5306-00-182-2016	59	3
5330-00-182-3210	BULK	
4730-00-182-9021	12	8
5310-00-183-4355	BULK	
3110-00-183-7537	37	27
3110-00-183-7537	38	24
8135-00-183-8814	BULK	
3110-00-183-9175	54	2
5310-00-184-8966	62	15
4730-00-188-3493	7	27
4730-00-188-3510	7	32
4920-00-195-1025	E2	1
4720-00-195-9789	63	16
4720-00-195-9789	64	12
5310-00-196-6676	33	15
5310-00-198-4735	65	8
5310-00-198-4759	18	12
5310-00-198-4759	19	4
4810-00-198-8611	61	5
9510-00-199-9324	BULK	
5340-00-200-3046	BULK	
5306-00-202-0441	23	9
5330-00-202-3823	35	42
5330-00-202-3823	36	34
5365-00-205-4756	37	188
5365-00-205-4756	38	186
5360-00-205-5505	37	113
5360-00-205-5505	38	112
5305-00-206-6814	30	3
5306-00-207-9725	9	26
5310-00-208-5769	34	6
5310-00-208-5769	52	29
5310-00-209-1816	41	51
5306-00-211-9185	26	5
5210-00-220-2069	E10	1
3465-00-221-4975	E3	8
2915-00-223-6999	33	31
2915-00-223-6999	35	1
3439-00-224-3567	BULK	
5307-00-226-3909	28	3
3020-00-226-6215	9	36
3110-00-227-4781	41	72
4920-00-228-1685	E28	5
4920-00-228-1687	E11	10
4920-00-228-1834	E6	9
5210-00-228-8821	E29	2
5120-00-228-8836	E4	8
5306-00-229-0355	29	29
2840-00-231-0447	6	35
9535-00-232-1856	BULK	
9535-00-232-6947	BULK	
5315-00-234-1856	14	22
2840-00-234-6292	19	74
2840-00-234-7225	17	14
2840-00-234-7226	17	5
5310-00-234-7821	21	3
5330-00-235-0237	19	79
6685-00-235-4593	E16	6
6685-00-235-4594	E16	10
5306-00-239-7798	3	6
5306-00-239-7799	4	2
5306-00-240-6525	3	36
5315-00-241-2923	43	55
5315-00-241-2923	44	61
5220-00-241-5266	E1	5
4920-00-245-1830	E3	9
3439-00-246-0575	BULK	
2840-00-247-0263	29	39
2840-00-247-0354	68	

STOCK NUMBER	FIGURE NO.	ITEM NO.	STOCK NUMBER	FIGURE NO.	ITEM NO.
5330-00-248-3831	35	58	5330-00-250-0224	35	57
5330-00-248-3831	36	47	5330-00-250-0224	36	53
5330-00-248-3831	37	135	5330-00-250-0224	37	100
5330-00-248-3831	38	133	5330-00-250-0224	38	99
5330-00-248-3831	39	75	5330-00-250-0227	37	174
5330-00-248-3831	41	80	5330-00-250-0227	38	172
5330-00-248-3831	48	65	5330-00-250-0228	43	34
5330-00-248-3832	37	54	5330-00-250-0228	44	36
5330-00-248-3832	38	53	5330-00-250-0236	BULK	
5330-00-248-3832	43	21	5330-00-250-0236	37	10
5330-00-248-3832	44	25	5330-00-250-0236	38	13
5330-00-248-3832	47	17	5120-00-250-6055	E35	8
5330-00-248-3832	48	28	5340-00-250-5999	56	4
5330-00-248-3833	35	46	4920-00-252-2636	E36	7
5330-00-248-3833	36	39	4920-00-252-2726	E36	7
5330-00-248-3833	37	64	4920-00-252-2727	E36	8
5330-00-248-3833	38	63	5330-00-252-6048	35	37
5330-00-248-3835	36	42	5330-00-252-6048	47	6
5330-00-248-3835	37	72	5330-00-252-6048	66	18
5330-00-248-3835	38	71	4920-00-253-1705	E1	8
5330-00-248-3835	39	18	4920-00-253-1707	E1	6
5330-00-248-3835	39	91	4920-00-253-1708	E1	6
5330-00-248-3835	39	103	4920-00-253-1709	E1	7
5330-00-248-3835	41	175	5330-00-253-1722	16	60
5330-00-248-3835	42	7	5330-00-253-1722	17	67
5330-00-248-3835	43	16	5330-00-253-1722	19	45
5330-00-248-3835	44	18	5330-00-253-1722	24	11
5330-00-248-3835	48	8	5330-00-253-1722	24	35
5330-00-248-3836	37	69	5330-00-253-1722	25	20
5330-00-248-3836	38	68	5305-00-253-5603	62	35
5330-00-248-3836	39	76	5305-00-253-5612	29	55
5330-00-248-3836	40	7	3439-00-255-4566	BULK	
5330-00-248-3836	41	79	5210-00-257-1131	E3	4
5330-00-248-3836	42	16	5306-00-259-1054	55	
5330-00-248-3836	48	64	5306-00-259-1056	8	3
5330-00-248-3836	49	28	5330-00-263-8011	37	51
5330-00-248-3837	37	46	5330-00-263-8011	38	50
5330-00-248-3837	38	44	5330-00-263-8028	14	4
5330-00-248-3838	37	31	5330-00-263-8028	33	8
5330-00-248-3838	38	31	5330-00-263-8028	34	5
5330-00-248-3838	39	22	5330-00-263-8028	35	8
5330-00-248-3838	41	78	5330-00-263-8028	36	4
5330-00-248-3838	43	26	5330-00-263-8028	37	6
5330-00-248-3838	44	29	5330-00-263-8028	38	3
5330-00-248-3838	47	24	5330-00-263-8028	39	5
5330-00-248-3838	48	35	5330-00-263-8028	52	18
5330-00-248-3838	49	12	5330-00-263-8028	53	5
5330-00-248-3839	37	95	5330-00-263-8030	37	3
5330-00-248-3839	38	94	5330-00-263-8030	48	10
5330-00-248-3840	37	32	5330-00-263-8030	50	12
5330-00-248-3840	38	30	5330-00-263-8032	37	124
5330-00-248-3840	39	77	5330-00-263-8032	38	121
5330-00-248-3840	41	77	5330-00-263-8032	50	15
5330-00-248-3840	43	49	5306-00-263-8645	29	22
5330-00-248-3840	44	55	5340-00-264-1203	35	2
5330-00-248-3840	48	63	5330-00-265-1076	37	86
5330-00-248-3840	66	8	5330-00-265-1076	38	85
5330-00-248-3842	37	122	5330-00-265-1078	37	87
5330-00-248-3842	38	119	5330-00-265-1078	38	86
5330-00-248-3842	41	87	5330-00-265-1088	35	28
5330-00-248-3842	66	17	5330-00-265-1088	36	25
5330-00-248-3845	35	32	5330-00-265-1088	37	73
5330-00-248-3845	37	34	5330-00-265-1088	38	72
5330-00-248-3845	38	28	5330-00-265-1095	35	55
5330-00-248-3845	51	18	7510-00-266-5006	BULK	
5330-00-248-3845	66	5	7510-00-266-5006	BULK	
5330-00-248-3847	43	22	7510-00-266-6712	BULK	
5330-00-248-3847	44	24	5310-00-268-6022	24	6
5330-00-248-3848	35	49	5306-00-269-6663	4	2
5330-00-248-3848	37	187	5306-00-269-6884	14	16
5330-00-248-3848	38	185	5306-00-269-6586	8	2
5330-00-248-3848	39	92	5306-00-269-6586	63	20
5330-00-248-3848	41	144	5306-00-269-6586	64	18
5330-00-248-3849	35	56	5306-00-270-2871	26	5
5330-00-248-3849	36	48	5305-00-271-2007	59	3
5330-00-248-3849	37	215	5305-00-271-5222	66	2
5330-00-248-3849	38	204	5305-00-271-7778	33	21
5330-00-248-3849	48	57	5305-00-271-7778	34	12
5306-00-248-5870	19	84	5305-00-273-7460	27	19
9535-00-249-5809	BULK		5210-00-274-2661	E40	2

STOCK NUMBER	FIGURE NO.	ITEM NO.
5310-00-275-0787	10	13
5310-00-275-0787	15	5
5315-00-276-0112	32	24
5315-00-276-6766	7	36
4730-00-278-5817	33	16
5365-00-278-8805	BULK	
5920-00-280-8342	BULK	
5920-00-280-8344	BULK	
5306-00-281-2588	50	1
5306-00-281-2588	52	34
5306-00-281-9541	25	10
5306-00-281-9542	24	27
5306-00-281-9542	25	29
5306-00-281-9542	55	16
5306-00-281-9547	25	1
5306-00-281-9549	30	51
8135-00-282-0565	BULK	
5306-00-282-0508	4	5
5306-00-282-0508	33	5
5306-00-282-3333	3	15
5306-00-282-3333	27	32
5306-00-282-3333	56	23
5306-00-282-3340	67	7
5306-00-282-4129	33	17
5306-00-282-4129	34	27
5306-00-282-4133	55	15
5310-00-282-7823	11	6
5310-00-282-7823	33	7
5310-00-282-7823	53	4
5306-00-282-8637	30	20
2915-00-285-6646	41	35
5305-00-286-0214	57	15
5305-00-286-0214	58	13
5320-00-286-4753	20	28
5320-00-286-4753	21	25
5320-00-286-4756	20	25
5340-00-286-6600	3	35
5365-00-289-3019	7	22
5365-00-289-3073	29	52
5340-00-290-4480	9	59
5340-00-290-4497	7	29
5340-00-290-4497	28	19
5340-00-290-4497	65	17
5340-00-290-4501	28	20
5340-00-290-4502	3	9
5340-00-290-4511	7	26
5340-00-290-4513	7	24
5340-00-290-4660	7	39
5340-00-290-4660	47	38
5340-00-290-4660	48	72
5340-00-290-5144	27	87
5340-00-290-7222	35	2
5340-00-290-7225	BULK	
5340-00-290-7227	BULK	
5340-00-291-3484	3	10
5340-00-291-3484	55	22
5340-00-291-3492	3	11
5340-00-291-3492	7	28
5340-00-291-3493	28	18
5330-00-291-7384	39	59
5305-00-292-5298	29	58
9505-00-293-4208	BULK	
5306-00-297-0045	27	4
5315-00-298-1032	3	7
5310-00-298-2747	57	2
5306-00-298-2808	3	22
5306-00-298-2808	10	2
5306-00-298-2809	52	3
5306-00-298-2809	53	18
5306-00-298-2809	55	8
5306-00-298-2809	56	16
5330-00-298-4929	29	53
5330-00-298-4929	51	3
9320-00-298-7587	BULK	
5310-00-298-9039	37	18
5310-00-298-9039	38	15
5340-00-299-1064	43	31
5340-00-299-1064	44	34
2995-00-313-1433	27	13
5365-00-350-6224	23	32
5330-00-390-9013	27	88
5120-00-381-9126	F40	3
5306-00-400-0048	29	33
3120-00-400-2784	F11	3
3040-00-400-7285	27	60
4920-00-402-8424	F14	2
3120-00-403-2873	32	21
5330-00-403-4364	16	43
4920-00-403-7786	F41	6
2915-00-404-3377	52	6
9510-00-406-9084	BULK	
5340-00-407-9261	BULK	
2840-00-408-5146	30	38
4920-00-409-8219	F4	9
5120-00-409-9121	F43	4
5120-00-409-9122	F5	7
5330-00-410-8153	30	5
5330-00-411-4436	52	7
5365-00-411-9740	27	50
5305-00-412-4448	29	4
5970-00-419-4291	BULK	
5133-00-419-9880	F40	6
4920-00-419-9695	F43	2
4920-00-420-0877	F4	6
4920-00-420-0882	F1	9
5330-00-420-5788	30	4
5120-00-421-1773	F3	11
4920-00-421-1795	F4	5
2840-00-421-4151	19	36
2840-00-421-4152	19	37
2840-00-421-4153	19	34
3120-00-435-2625	F11	3
4920-00-435-7814	F2	8
4920-00-435-7831	F5	2
2840-00-437-2630	19	58
2840-00-437-2631	19	59
2840-00-437-2632	19	56
2840-00-437-2638	19	57
2840-00-437-2640	19	75
2840-00-437-2668	19	76
5365-00-437-4013	23	15
4920-00-437-7553	F36	2
4920-00-437-7555	F4	7
2840-00-442-6220	16	38
2840-00-442-6222	16	36
3120-00-442-6265	22	21
4920-00-444-2362	F36	9
5365-00-445-3509	5	17
5365-00-445-3509	6	21
5365-00-445-3509	24	28
5365-00-445-6237	22	12
5120-00-446-1585	F56	8
5120-00-446-1586	F44	1
2915-00-446-3036	53	23
2945-00-446-6445	65	16
2945-00-446-6446	65	10
4820-00-446-6448	65	6
5360-00-446-6449	65	5
2840-00-446-6450	65	3
2945-00-446-6451	65	7
5306-00-446-6471	17	72
5310-00-446-6479	65	13
5306-00-446-6481	65	12
2840-00-446-8509	17	3
2840-00-448-5580	F51	6
5340-00-449-4491	BULK	
5340-00-449-4491	BULK	
3020-00-453-9441	32	28
4920-00-455-6148	F46	9
2840-00-456-0506	17	2
5306-00-457-5856	23	6
5365-00-458-3053	27	94
5330-00-460-5795	37	33
5330-00-460-5795	38	29
5330-00-460-5795	39	74
5330-00-460-5795	45	19
5310-00-460-5801	43	40
5310-00-460-5801	44	46
5330-00-460-5803	37	56
5330-00-460-5803	38	55

STOCK NUMBER	FIGURE NO.	ITEM NO.	STOCK NUMBER	FIGURE NO.	ITEM NO.
2840-00-462-8865	19	73	3120-00-458-5742	3	37
2840-00-462-8883	19	72	5365-00-507-7412	35	4
5120-00-464-1817	E3	7	5365-00-507-7412	36	6
5120-00-464-1823	E3	7	5365-00-507-7412	37	5
2840-00-472-8686	9	9	5365-00-507-7412	38	2
2915-00-472-9749	49	3	5120-00-509-2565	E14	8
3110-00-472-9566	9	17	5340-00-514-2777	BULK	
5120-00-473-7013	E41	1	5306-00-514-8130	29	33
5120-00-473-7015	E41	1	5310-00-515-7449	35	14
5120-00-473-7016	E41	1	5310-00-515-7449	35	53
5120-00-473-7017	E2	10	5310-00-515-7449	36	23
4920-00-473-7589	E5	3	5310-00-515-7449	37	169
5120-00-473-7591	E43	7	5310-00-515-7449	38	167
5120-00-473-7702	E2	11	5310-00-515-7449	39	113
5120-00-473-7703	E40	3	5310-00-515-7449	41	41
5307-00-474-8480	28	14	5310-00-515-7592	30	31
2840-00-474-9712	21	11	5340-00-515-9156	24	4
2840-00-475-0052	9	46	5220-00-522-2268	E48	4
2840-00-475-0052	27	57	2840-00-522-2351	8	9
2840-00-475-0053	27	83	2840-00-522-2358	10	7
2840-00-475-0055	27	31	2840-00-522-2389	8	61
2840-00-475-0056	27	26	4920-00-522-2768	E4	7
5365-00-475-0057	27	29	4920-00-522-2797	E4	7
3040-00-475-0058	27	65	5306-00-527-5508	10	9
5365-00-475-0067	5	5	7510-00-530-6375	BULK	
5365-00-475-0067	6	5	5330-00-531-2068	64	4
2840-00-475-0068	5	55	5330-00-531-2070	27	97
2840-00-475-0069	5	57	5330-00-531-2070	57	13
5315-00-475-1533	7	37	5330-00-531-2070	58	3
2840-00-475-2038	27	66	5330-00-531-2070	63	9
5365-00-475-5441	56	7	5330-00-531-2070	63	23
5310-00-475-5442	27	42	5330-00-531-2070	64	4
2840-00-475-6547	5	46	5330-00-531-2070	67	6
2840-00-475-6550	5	52	5330-00-531-2335	37	53
2840-00-475-6550	6	54	5330-00-531-2335	38	52
2840-00-475-6551	32	11	5310-00-531-9514	BULK	
2840-00-475-6556	24	31	5310-00-531-9515	36	31
2840-00-475-6568	7	16	5340-00-533-3509	51	11
5330-00-475-6572	27	53	5340-00-533-3509	58	10
2840-00-475-6980	32	13	5340-00-533-3510	52	28
5307-00-475-9621	28	14	5340-00-533-3510	53	20
2915-00-478-6026	50	21	5340-00-533-3511	14	10
2915-00-478-6026	51	1	5340-00-533-3511	33	4
2915-00-478-6027	50	22	5340-00-533-3511	34	25
2915-00-478-6027	51	10	5340-00-533-3511	50	20
5220-00-481-3109	E26	6	5340-00-533-3511	52	15
5220-00-481-3114	E40	1	5340-00-533-3511	53	11
5120-00-482-2543	E5	9	5340-00-533-3511	57	5
2945-00-482-9071	13	31	5340-00-533-3511	58	12
9905-00-483-1256	51	5	5340-00-533-3512	11	14
9905-00-483-1257	51	19	5340-00-533-3512	12	7
5310-00-484-0973	18	26	5340-00-533-3512	14	5
5365-00-484-1673	BULK		5340-00-533-3512	33	3
5365-00-484-1689	BULK		5340-00-533-3512	52	13
4920-00-484-3954	E2	7	5340-00-533-3512	53	9
5365-00-484-6511	37	79	5340-00-533-3512	55	2
5365-00-484-6511	38	78	5340-00-533-3512	57	8
5365-00-484-6512	37	79	5340-00-533-3512	58	11
5365-00-484-6512	38	78	5340-00-533-3512	63	1
5310-00-484-6513	37	79	5340-00-533-3512	64	10
5310-00-484-6513	38	78	5340-00-533-3513	52	22
5365-00-485-0777	BULK		5340-00-533-3514	11	10
5365-00-486-8077	KITS		5340-00-533-3514	12	4
5330-00-486-8080	56	6	5340-00-533-3514	50	8
5340-00-488-1366	5	23	5340-00-533-3514	56	12
5340-00-488-1449	5	23	5340-00-533-3514	63	4
5340-00-488-1460	5	23	2840-00-533-3771	24	20
2840-00-488-7489	32	20	2840-00-533-3787	24	21
4920-00-489-8446	E25	2	5360-00-533-3805	13	5
4920-00-491-0840	E56	7	2840-00-533-3810	25	57
4920-00-491-7108	E28	8	2840-00-533-3814	9	44
5360-00-492-3218	E51	12	2840-00-533-3822	9	28
2840-00-492-4442	6	36	5360-00-533-3856	13	17
2840-00-492-4443	6	33	3040-00-533-3869	9	45
2840-00-492-4447	6	34	3040-00-533-3870	9	20
2840-00-492-4448	6	38	2840-00-533-5113	16	8
2840-00-492-4450	6	37	2840-00-533-5139	16	9
2840-00-492-4453	6	39	2840-00-537-2010	9	4
4920-00-495-6592	E43	3	2840-00-537-2033	3	24
2840-00-497-1975	30	38	2840-00-537-2038	9	7

STOCK NUMBER	FIGURE NO.	ITEM NO.
4730-00-540-4363	52	25
4730-00-540-4363	53	22
5330-00-542-1420	9	53
5330-00-542-1420	18	10
5330-00-542-1420	27	93
5330-00-542-1420	29	41
5330-00-542-1420	65	14
5305-00-543-2753	37	17
5305-00-543-2753	38	14
5305-00-543-2753	52	33
5315-00-543-3033	20	2
5315-00-543-3033	21	2
5365-00-543-4110	27	45
5305-00-543-4517	66	21
5310-00-550-4271	37	42
5310-00-550-4271	38	39
5330-00-551-8252	15	17
5330-00-551-9574	15	19
3110-00-554-0815	41	117
5310-00-558-6207	48	39
5310-00-560-3173	37	43
5310-00-560-3173	38	40
5355-00-567-3076	35	35
5355-00-567-3076	47	4
5355-00-567-3076	48	14
5310-00-568-4442	41	74
2915-00-570-0312	41	84
5210-00-570-9775	E14	9
5210-00-570-9776	E15	6
2840-00-570-9803	17	30
2840-00-570-9811	33	35
2840-00-570-9811	34	21
5330-00-576-9925	27	51
5330-00-576-9925	27	88
5306-00-579-3373	26	3
5330-00-579-7548	9	3
5330-00-579-7549	27	95
5330-00-580-2278	38	136
3110-00-580-3253	9	35
3110-00-580-3253	27	54
3110-00-580-3253	27	75
3110-00-580-3253	32	37
3110-00-580-3254	9	23
3110-00-580-3254	27	74
3110-00-580-3268	27	48
3110-00-580-3268	32	30
5330-00-580-5937	27	73
5330-00-580-5937	32	17
5330-00-580-5939	30	22
5330-00-580-5943	26	9
5330-00-580-5943	27	11
5330-00-580-8518	38	139
6685-00-580-9651	57	12
6685-00-580-9651	58	2
5310-00-582-5677	3	4
5330-00-584-0150	9	51
5330-00-584-0150	63	19
5330-00-584-0150	64	15
5330-00-584-1100	37	83
5330-00-584-1100	38	82
5330-00-584-1100	48	17
5330-00-584-1222	36	41
5330-00-584-1231	36	29
5330-00-585-1065	33	29
5330-00-585-1065	34	10
5330-00-585-1066	26	7
5330-00-585-1066	67	10
2840-00-587-3622	27	89
2840-00-587-3622	28	11
2840-00-587-3674	27	52
2840-00-587-3674	28	1
3040-00-587-3749	27	83
2840-00-587-3936	26	1
2840-00-587-3936	27	1
4920-00-587-4677	E8	8
4920-00-587-4678	E8	9
4920-00-587-5886	E45	1
2840-00-587-7089	24	14
2840-00-587-7090	9	11
5365-00-587-7091	9	32
5365-00-587-7091	9	56
5360-00-587-7107	41	137
5340-00-587-7114	37	180
5340-00-587-7114	38	179
5360-00-587-7115	37	175
5360-00-587-7115	38	173
2840-00-590-0542	9	48
2915-00-591-5539	41	167
2915-00-591-5603	41	166
2915-00-591-5637	35	36
2915-00-591-5637	43	5
2915-00-591-5637	48	15
2915-00-591-5638	35	29
2915-00-591-5663	41	10
5310-00-591-5672	37	209
5310-00-591-5672	40	5
5310-00-595-6275	41	129
9505-00-596-5101	BULK	
5310-00-596-5118	43	23
5310-00-596-5118	44	38
5340-00-597-3302	3	12
5340-00-597-3302	7	35
5340-00-597-3302	9	58
5340-00-597-3302	13	3
5340-00-597-3302	28	9
5365-00-598-1138	56	5
5340-00-598-5634	7	32
5330-00-599-2537	15	21
5365-00-600-0720	41	96
5365-00-600-0724	35	7
5365-00-600-0724	36	5
5305-00-600-0725	35	16
2915-00-600-0726	37	19
2915-00-600-0726	38	16
5310-00-600-0751	41	114
5315-00-600-0752	37	140
5315-00-600-0752	38	140
2915-00-600-6618	37	68
2915-00-600-6618	38	67
2840-00-600-6650	9	42
5360-00-604-1055	39	96
5360-00-604-1055	42	3
5360-00-604-1055	43	10
5360-00-604-1055	44	13
5365-00-604-1100	43	39
5365-00-604-1100	44	44
5307-00-604-1109	35	52
5307-00-604-1109	36	46
5340-00-604-1451	7	38
2840-00-604-1453	22	9
5330-00-604-1469	16	33
2840-00-605-5137	10	6
5310-00-613-7435	29	13
5340-00-616-4756	35	5
5330-00-618-0490	59	9
5330-00-618-1664	27	21
5310-00-618-1999	39	58
5310-00-618-1999	41	125
5310-00-618-2002	43	41
5310-00-618-2002	44	47
5310-00-618-2003	39	58
5310-00-618-2003	41	125
5310-00-618-2004	39	58
5310-00-618-2004	41	125
5365-00-618-2103	39	107
5365-00-618-2104	41	141
5365-00-618-2106	37	37
5365-00-618-2106	38	32
5310-00-618-2108	41	30
5310-00-618-2119	39	58
5310-00-618-2119	41	125
5330-00-618-2518	30	39
5330-00-618-3447	35	47
5330-00-618-3447	36	38
5120-00-618-4994	E46	4
5120-00-618-5302	E15	2
2915-00-618-5828	37	38
2915-00-618-5828	38	35
5330-00-618-6588	37	107
5330-00-618-6588	38	106

STOCK NUMBER	FIGURE NO.	ITEM NO.
5365-00-618-7050	37	52
5365-00-618-7050	38	51
5306-00-619-1807	7	9
5315-00-619-3275	27	77
5210-00-619-3647	E15	7
5340-00-619-3809	53	13
5315-00-619-4150	7	25
5306-00-619-4549	14	19
5306-00-619-4549	15	2
5307-00-619-5328	28	2
5307-00-619-5330	28	2
5310-00-619-5368	18	21
5310-00-619-5368	20	4
5315-00-619-7464	18	9
5305-00-622-9486	13	20
5305-00-622-9486	55	10
5305-00-622-9486	56	20
2995-00-625-3500	13	24
9515-00-632-2982	BULK	
5365-00-633-1894	7	34
5365-00-633-1894	9	57
5365-00-633-1894	37	220
5365-00-633-1894	38	209
5365-00-633-1894	47	35
5365-00-633-1894	48	69
7510-00-634-2946	BULK	
5365-00-634-7076	17	42
5306-00-637-8069	67	2
5306-00-637-8070	14	25
5307-00-637-8902	5	30
5305-00-638-0399	29	47
5306-00-638-5747	3	6
5306-00-638-5834	3	14
5310-00-639-3586	32	26
3439-00-640-3713	BULK	
9515-00-640-4145	BULK	
9515-00-640-4145	BULK	
9515-00-640-4236	BULK	
6145-00-643-0252	BULK	
4730-00-647-1556	37	2
2915-00-647-1666	47	20
2915-00-647-1666	48	25
2915-00-647-1680	37	194
2915-00-647-1680	38	192
2915-00-647-1704	37	91
2915-00-647-1704	38	90
5310-00-647-2065	35	43
5310-00-647-2065	41	122
5310-00-647-2065	49	8
5360-00-647-2340	41	70
5340-00-647-2370	41	99
5365-00-647-2376	35	56
5340-00-647-2405	42	5
5360-00-647-2428	43	2
5360-00-647-2428	44	5
5365-00-647-2540	37	176
5365-00-647-2540	38	174
5365-00-647-2755	37	181
5365-00-647-2755	38	179
5365-00-647-2755	47	29
5365-00-647-2769	37	125
5365-00-647-2769	38	122
5340-00-647-2825	37	208
5340-00-647-2825	40	4
5365-00-647-2836	41	53
5365-00-647-2836	41	133
5365-00-647-2836	43	15
5365-00-647-2844	35	50
5340-00-647-2962	37	118
5340-00-647-2962	38	116
5330-00-647-2969	37	104
5330-00-647-2969	38	103
5365-00-647-3006	35	46
5365-00-647-3021	43	14
5365-00-647-3021	44	17
5365-00-647-3023	37	127
5365-00-647-3023	38	124
5365-00-647-3024	37	108
5365-00-647-3024	38	107
2840-00-652-6569	5	23
2840-00-652-6570	5	23
2840-00-652-6582	5	23
2840-00-653-0073	5	23
2840-00-653-0080	5	23
2840-00-653-0094	5	23
2840-00-653-0103	5	23
2840-00-654-1530	5	23
2840-00-654-1532	5	23
2840-00-654-1534	5	23
2915-00-654-5577	51	9
2915-00-654-5577	51	16
2915-00-654-5579	51	12
5310-00-654-6530	20	3
5330-00-654-6531	27	101
5330-00-654-6532	27	16
5330-00-654-6534	50	7
5330-00-654-6534	52	40
5305-00-655-6573	13	19
5307-00-655-7156	28	13
5307-00-655-7209	28	13
5365-00-655-7765	25	24
5365-00-655-7766	25	24
5365-00-655-7767	25	24
5365-00-655-7768	24	24
5365-00-655-7768	25	24
5365-00-655-7769	25	24
5365-00-655-7776	25	24
5365-00-655-7777	25	24
5365-00-655-7778	24	24
5365-00-655-7778	25	24
5365-00-655-7779	24	24
5365-00-655-7779	25	24
5365-00-655-7780	24	24
5365-00-655-7780	25	24
5365-00-655-7781	24	24
5365-00-655-7781	25	24
5365-00-655-7782	24	24
5365-00-655-7782	25	24
5365-00-655-7783	25	24
5365-00-655-7784	25	24
5365-00-655-7785	25	24
5365-00-655-7786	25	24
5365-00-655-7787	25	24
5365-00-655-7788	25	24
5365-00-655-7789	25	24
5365-00-655-7790	25	24
5365-00-655-7791	25	24
5365-00-655-8155	25	27
5315-00-655-8162	51	8
5315-00-655-8162	51	15
5306-00-656-6850	16	41
2840-00-656-8517	18	8
2840-00-656-8520	30	9
2840-00-656-8523	27	18
2840-00-656-8526	18	6
2915-00-656-8528	50	2
5330-00-656-8534	33	34
5330-00-656-8534	34	22
2840-00-656-8541	32	6
3130-00-656-8544	28	7
3130-00-656-8545	28	8
3130-00-656-8546	28	16
5310-00-656-8547	28	17
2840-00-656-8548	50	4
2840-00-656-8548	52	36
2840-00-656-8549	19	87
2840-00-656-8549	55	6
2840-00-656-8549	63	13
2840-00-656-8550	19	86
2840-00-656-8550	53	10
2840-00-656-8550	55	5
2840-00-656-8575	27	24
5330-00-658-2085	30	5
5310-00-658-5255	18	32
5310-00-658-5255	25	2
5310-00-658-5308	24	13
5310-00-658-5308	25	2
2945-00-658-7208	32	16
2840-00-659-5622	18	4
2840-00-659-7591	27	100

STOCK NUMBER	FIGURE NO.	ITEM NO.
2840-00-659-7996	5	26
2840-00-659-8004	24	26
2840-00-659-9618	32	18
5315-00-660-0812	51	11
5340-00-660-1154	13	13
5340-00-660-1154	57	6
5307-00-660-2626	24	8
5306-00-660-2806	25	43
5310-00-660-2896	9	39
5310-00-660-3229	32	2
5306-00-660-3271	26	2
5340-00-660-3716	BULK	
5315-00-663-2771	35	33
5315-00-663-2771	41	152
5315-00-663-2771	43	44
5315-00-663-2771	44	49
5315-00-663-2771	47	2
5315-00-663-2771	48	12
5315-00-663-2773	41	157
5315-00-663-2773	43	19
5315-00-663-2773	44	21
5365-00-664-3048	39	45
5340-00-664-3092	33	9
5340-00-664-3092	34	26
5120-00-670-0432	E48	2
5310-00-670-1193	27	22
2840-00-670-2617	29	46
5365-00-670-4342	18	28
4920-00-670-6990	E37	4
4730-00-670-7339	18	2
4730-00-670-7339	19	20
2840-00-671-0159	5	31
2840-00-671-0160	5	36
2840-00-671-0161	5	41
3020-00-671-0164	5	4
3020-00-671-0164	6	4
5120-00-671-2129	E2C	1
5120-00-671-4022	E2C	6
2915-00-671-5375	37	50
2915-00-671-5375	38	49
2915-00-671-5469	43	11
2915-00-671-5469	44	14
2915-00-671-5475	37	80
2915-00-671-5475	38	79
2915-00-671-5483	43	5
2915-00-671-5483	44	9
2915-00-671-5493	42	8
2915-00-671-5494	37	112
2915-00-671-5494	38	111
2915-00-671-5500	41	112
2915-00-671-5508	43	27
2915-00-671-5508	44	30
2915-00-671-5509	43	20
2915-00-671-5509	44	26
3020-00-671-5520	41	108
3020-00-671-5521	49	4
3020-00-671-5522	41	110
2915-00-671-6525	42	2
5360-00-671-7873	43	33
5360-00-671-7873	44	37
2915-00-671-7875	37	82
2915-00-671-7875	38	81
2915-00-671-7883	42	4
2915-00-671-7885	37	76
2915-00-671-7885	38	75
2915-00-671-7932	37	81
2915-00-671-7932	38	80
2915-00-672-0821	39	52
2915-00-672-0870	39	54
2915-00-672-4174	39	53
5315-00-672-4177	43	29
5315-00-672-4177	44	31A
5305-00-673-3310	39	29
2915-00-675-7328	43	24
2915-00-675-7328	44	27
3010-00-675-7334	37	35
1730-00-676-2274	E4	4
3110-00-676-8132	32	7
5360-00-678-8584	37	207
5360-00-678-8584	40	3
5360-00-678-8584	41	97
5315-00-678-8586	41	150
5310-00-678-8552	47	11
5310-00-678-8552	48	6
5310-00-678-8552	49	21
3120-00-678-8553	47	15
3120-00-678-8553	48	24
3120-00-678-8553	49	29
5315-00-678-8558	37	36
2915-00-679-4255	37	213
2915-00-679-4255	40	10
2915-00-679-4260	35	45
2915-00-679-4260	36	37
2915-00-680-3126	41	138
2915-00-680-3143	37	84
2915-00-680-3143	38	83
5340-00-680-3762	47	37
5340-00-680-3762	48	71
5365-00-680-3505	27	7
5310-00-680-5671	9	38
5310-00-680-5671	32	34
5310-00-680-6240	41	134
5310-00-680-6245	43	36
5310-00-680-6245	44	41
5310-00-680-6247	35	96
5310-00-680-6247	41	90
5310-00-680-7566	43	9
5310-00-680-7566	44	12
5310-00-680-7574	43	3
5310-00-680-7574	44	7
5310-00-680-7574	44	39
5365-00-680-8884	35	24
5365-00-680-8884	36	16
5365-00-680-8884	37	217
5365-00-680-8884	38	206
5315-00-680-8857	35	109
5340-00-680-8746	35	25
5340-00-680-8746	36	17
5340-00-680-8746	37	219
5340-00-680-8746	38	207
5340-00-682-2113	BULK	
5340-00-682-2117	BULK	
2840-00-682-8107	24	39
3110-00-684-1826	27	64
4730-00-684-6516	11	1
4730-00-684-6516	50	11
4730-00-684-6516	63	8
5320-00-684-5829	24	5
5310-00-685-3744	33	22
5310-00-685-3744	34	13
5310-00-685-3744	37	141
5310-00-685-3744	44	33
5365-00-687-2275	65	2
4720-00-688-7856	BULK	
4720-00-688-7857	BULK	
5360-00-688-5869	37	152
5305-00-688-9532	35	15
5315-00-689-5873	41	111
2915-00-690-2722	45	20
5310-00-690-8448	18	29
5330-00-690-5743	BULK	
5360-00-693-1694	37	40
5360-00-693-1694	38	37
5120-00-701-1291	E22	1
5305-00-701-5069	35	21
5305-00-701-5071	35	67
5305-00-701-5075	37	39
5305-00-701-5075	38	36
5365-00-701-7309	41	9
5365-00-701-7309	41	170
5365-00-701-7317	35	80
5365-00-701-7317	35	83
5365-00-701-7318	41	162
5365-00-701-7319	41	120
5365-00-701-7320	41	164
5365-00-701-7320	43	32
5365-00-701-7320	44	35

STOCK NUMBER	FIGURE NO.	ITEM NO.	STOCK NUMBER	FIGURE NO.	ITEM NO.
5365-00-701-7321	37	49	2840-00-727-4662	26	1
5365-00-701-7321	38	48	2840-00-727-4663	27	1
5310-00-701-7322	39	69	3110-00-727-7107	29	31
5310-00-702-0560	39	71	5330-00-729-5254	9	10
5310-00-702-0560	41	154	5330-00-729-5254	29	5
5365-00-702-4481	41	95	5330-00-729-5254	62	11
5330-00-702-4713	27	12	2840-00-731-5338	17	22
5330-00-702-4713	67	11	2840-00-731-5371	17	12
5330-00-702-4713	68		2840-00-731-5456	17	60
5315-00-702-5616	37	102	4710-00-731-5455	17	11
5315-00-702-5616	38	101	5305-00-731-8112	41	161
5315-00-702-5618	37	129	2840-00-731-8516	3	25
5315-00-702-5618	38	126	4920-00-735-1455	E43	11
5315-00-702-9650	39	90	2840-00-735-6543	7	6
5360-00-704-9339	37	132A	5315-00-735-6575	9	41
5360-00-704-9339	38	131	5306-00-736-1041	7	3
2915-00-704-9434	37	211	2840-00-736-3979	27	46
2915-00-704-9434	40	8	2840-00-736-3984	16	51
3120-00-704-9441	41	62	5365-00-736-3985	19	46
4820-00-705-0425	37	183	2840-00-736-3996	22	3
4820-00-705-0425	38	181	2840-00-736-8653	7	13
3120-00-706-9213	41	37	5130-00-736-9036	E30	3
2915-00-706-9214	45	12	5120-00-736-9038	E35	3
2915-00-706-9214	46	12	5136-00-736-9044	E30	7
3120-00-706-9217	45	13	5130-00-736-9045	E39	4
3120-00-706-9217	46	13	2840-00-737-5627	13	7
5365-00-707-6886	37	170	4920-00-738-6790	E31	4
5365-00-707-6886	38	168	4920-00-738-6791	E31	5
5340-00-707-6891	37	65	4920-00-738-6794	E31	6
5340-00-707-6891	38	64	4920-00-738-6795	E31	7
2915-00-710-7939	37	179	4920-00-738-6796	E43	8
2915-00-710-7939	38	177	4920-00-738-6797	E30	2
3110-00-710-9532	41	143	4920-00-738-6823	E38	1
5315-00-713-1359	41	39	4920-00-738-6824	E38	6
5315-00-713-1360	41	182	3020-00-739-2589	27	49
4920-00-714-1317	E47	4	3020-00-739-2591	27	81
5330-00-715-1364	7	11	5120-00-739-5292	E22	4
2915-00-715-2240	37	210	5315-00-739-5293	E41	2
2915-00-715-2240	40	6	2840-00-739-6522	29	11
5340-00-715-2300	41	55	2840-00-739-6527	29	4
5120-00-716-5479	E19	2	5330-00-739-6529	9	34
4920-00-716-5486	E33	7	5310-00-740-3378	27	43
5120-00-716-5581	E34	3	2925-00-740-6108	KITS	
5305-00-716-8357	45	2	2925-00-740-6108	55	
5305-00-716-8357	46	2	2925-00-740-6108	56	
5355-00-717-2785	35	39	5330-00-753-1064	16	42
5355-00-717-2785	47	8	5330-00-753-1064	17	44
5355-00-717-2785	48	18	8135-00-753-4661	BULK	
3120-00-717-3471	47	19	4720-00-753-5372	BULK	
3120-00-717-3471	48	30	5305-00-753-7077	38	10
5365-00-717-3478	39	35	5305-00-753-7077	36	3
4920-00-717-7780	E33	9	5305-00-753-7077	39	3
2840-00-717-7801	27	52	2840-00-753-7295	29	48
2840-00-717-7801	28	1	2840-00-753-7296	29	49
5315-00-718-6793	37	200	5315-00-754-2114	39	37
5315-00-718-6793	38	198	5310-00-754-3353	32	3
5365-00-720-9221	56	3	2840-00-754-7419	16	12
5365-00-721-4828	7	12	2840-00-756-3843	22	13
5320-00-721-8972	22	11	4920-00-756-5489	E9	2
5310-00-722-4014	47	13	3120-00-757-2661	49	16
5310-00-722-4014	48	32	5120-00-757-2933	E33	6
4730-00-722-7214	34	4	4920-00-757-4665	E48	3
2915-00-725-1723	54	11	5120-00-757-4910	E21	1
5310-00-725-3776	41	135	2840-00-758-1541	KITS	
5330-00-725-4027	27	25	2840-00-758-1541	17	
4730-00-725-4351	11	5	2840-00-758-1541	18	
4730-00-725-4351	33	6	2840-00-758-1542	20	23
4730-00-725-4351	53	3	2840-00-758-4052	KITS	
4920-00-725-5670	E51	16	2840-00-758-4052	37	
2840-00-725-5695	17	47	2840-00-758-4052	38	
5340-00-726-2214	39	114	2840-00-760-3932	68	
5330-00-726-4153	7	10	5306-00-760-7299	3	14
5330-00-726-7027	67	4	5315-00-760-8219	31	20
5340-00-727-1095	BULK		5365-00-761-3647	30	7
3110-00-727-3032	5	10	5315-00-761-4146	48	51
3110-00-727-3032	6	10	5365-00-761-4179	32	38
3110-00-727-3032	24	23	5310-00-761-6882	39	112
3110-00-727-3032	25	23	5120-00-761-8988	E7	2
5120-00-727-4481	E2	3	4720-00-762-7962	64	2
4710-00-727-4563	17	13	2840-00-763-7603	29	36

STOCK NUMBER	FIGURE NO.	ITEM NO.
5340-00-764-7093	BULK	
5315-00-764-8229	62	31
8115-00-764-8732	BULK	
5315-00-765-2853	62	24
3040-00-766-8627	32	4
3020-00-766-8629	27	76
2840-00-766-8633	27	6
2840-00-766-8642	5	54
2840-00-766-8643	5	59
2840-00-766-8645	5	66
2840-00-766-8645	23	14
5365-00-766-8651	16	57
5365-00-766-8651	17	64
2840-00-766-8652	22	5
5330-00-766-8653	29	25
5330-00-766-8653	30	16
5340-00-768-4074	35	4
2840-00-769-9901	5	19
2840-00-769-9901	6	24
5330-00-769-9508	16	3
5330-00-769-9508	17	26
2915-00-770-7623	39	24
5310-00-770-8360	9	16
5310-00-770-8360	27	28
5365-00-771-7184	25	24
5365-00-771-7185	25	24
5365-00-771-7187	25	24
5315-00-772-3524	41	34
5315-00-772-3524	44	2
8145-00-772-7870	2	3
3110-00-774-8304	17	54
5365-00-775-2510	16	57
5365-00-775-2510	17	64
5306-00-775-6235	19	
2840-00-775-6512	63	17
2840-00-775-6512	64	14
5360-00-775-6513	50	5
5360-00-775-6513	52	37
5340-00-775-6514	13	14
5340-00-775-6514	57	7
5340-00-775-6514	63	5
2840-00-775-6516	59	11
2840-00-775-6517	33	26
2840-00-775-6517	34	8
2840-00-775-6519	55	14
5330-00-775-6523	33	19
5330-00-775-6523	34	17
2925-00-775-6524	57	17
2840-00-775-6525	33	30
2840-00-775-6525	34	11
5315-00-775-6553	50	3
5315-00-775-6553	52	39
2915-00-775-7812	49	34
2915-00-775-7824	43	54
2915-00-775-7827	49	25
3120-00-775-7828	49	18
2915-00-775-7829	49	17
5120-00-776-1837	E2	11
2840-00-776-1979	63	21
2840-00-776-7086	63	18
2840-00-776-7086	64	13
2840-00-776-7093	55	12
2840-00-776-7093	56	22
2915-00-776-7094	51	4
2840-00-776-7095	52	2
2840-00-776-7095	53	17
5330-00-776-7096	59	10
4920-00-776-7126	E56	5
5365-00-777-5339	55	16
5365-00-777-8163	33	28
5365-00-777-8163	34	9
2995-00-777-8541	16	63
5840-00-777-8635	53	12
5120-00-778-0661	E28	1
5120-00-778-0664	E43	5
2840-00-778-2261	16	58
5330-00-778-2268	16	35
2840-00-778-2271	18	25
2840-00-778-2272	22	7
2840-00-778-2274	22	2
4920-00-778-2304	E26	1
9905-00-778-8847	29	54
5365-00-779-3365	24	32
5365-00-779-3366	24	32
5365-00-779-3367	24	32
5365-00-779-3368	24	32
5365-00-779-3369	24	32
5365-00-779-3370	24	32
5365-00-779-3371	24	32
5365-00-779-3372	24	32
5365-00-779-3373	24	32
5365-00-779-3389	24	32
5365-00-779-3390	24	32
5365-00-779-3391	24	32
5365-00-779-3392	24	32
5365-00-779-3393	24	32
5365-00-779-5740	24	32
5305-00-779-6584	41	140
5307-00-779-7295	28	4
5307-00-779-7296	28	4
5307-00-779-7297	28	3
3110-00-780-2720	30	36
4920-00-780-4397	E47	4
4920-00-780-4398	E42	7
1730-00-780-4406	E56	1
5210-00-780-4414	E44	5
5120-00-780-4423	E39	7
5120-00-780-4424	E42	5
5120-00-780-5252	E4	1
5120-00-780-6379	E5	3
5310-00-780-9323	37	41
5310-00-780-9323	38	33
5330-00-781-0992	66	6
4720-00-781-1982	63	14
5305-00-781-5662	31	24
6685-00-782-0636	58	4
5310-00-782-1349	37	149
5310-00-782-1349	38	147
2840-00-782-1771	66	1
4920-00-782-3815	E44	2
2915-00-782-3819	42	31
5133-00-782-4231	E39	9
5365-00-782-7163	24	32
5365-00-782-7164	24	32
5330-00-782-7566	BULK	
2840-00-784-3589	26	10
2840-00-784-3591	27	33
2840-00-784-3592	27	103
2840-00-784-3593	27	39
5365-00-784-3594	29	10
2840-00-786-1719	27	23
4730-00-786-2592	27	86
2840-00-787-2557	7	7
2840-00-787-2558	7	13
5310-00-788-7493	58	11
5310-00-788-7493	56	21
3110-00-788-8376	30	29
3442-00-789-9014	E29	1
3460-00-789-9018	E46	2
2840-00-789-7805	7	1
2840-00-789-7805	29	56
5310-00-790-8116	5	65
5310-00-790-8116	23	13
2840-00-792-6470	16	2
2840-00-792-6470	17	25
2840-00-793-2068	18	17
2840-00-793-2070	18	19
5340-00-794-8179	10	14
2915-00-795-5485	39	40
2915-00-795-8502	41	44
5365-00-796-4306	37	61
5365-00-796-4306	38	60
2915-00-796-4308	37	71
2915-00-796-4308	38	73
5365-00-796-4314	37	33
5365-00-796-4314	38	27
5340-00-796-4341	35	15
5340-00-796-4341	36	7
2915-00-796-7083	37	73
2915-00-796-7083	38	69

STOCK NUMBER	FIGURE NO.	ITEM NO.	STOCK NUMBER	FIGURE NO.	ITEM NO.
5360-00-756-7089	49	21	5365-00-810-7282	29	16
5360-00-756-7092	37	48	5330-00-810-9659	9	12
5360-00-756-7092	38	47	5330-00-810-9659	13	30
5305-00-756-7094	45	10	5330-00-811-1449	11	2
5305-00-756-7094	46	10	5330-00-811-1449	12	9
5365-00-756-9776	16	57	5330-00-811-1449	18	3
5365-00-756-9776	17	64	5330-00-811-1449	18	7
2915-00-797-1535	37	128	5330-00-811-1449	19	19
2915-00-797-1535	38	125	5330-00-811-1445	63	19
2840-00-797-4824	24	22	5315-00-812-0091	32	32
2915-00-798-8626	37	77	4730-00-812-5038	14	9
2915-00-798-8626	38	76	5365-00-814-2449	68	9
2840-00-800-1289	16	62	5310-00-814-7325	9	6
8145-00-800-1988	68		5315-00-815-1405	41	109
5330-00-800-5180	29	23	5330-00-815-1991	29	51
5330-00-800-6351	26	11	5330-00-815-1991	31	18
5330-00-800-6353	27	44	5330-00-815-3508	7	5
5330-00-800-6869	8	8	5340-00-815-4529	41	183
5330-00-800-6870	27	104	4920-00-816-6838	E23	4
3110-00-801-3140	42	12	4920-00-816-6848	E25	4
3110-00-801-3140	43	52	4920-00-816-6856	E24	3
3110-00-801-3140	44	59	4920-00-816-6860	E26	2
5330-00-802-1360	39	6	4920-00-816-6871	E27	4
2840-00-802-2718	60	13	4920-00-816-6884	E28	6
2840-00-802-2722	60	14	4920-00-816-6908	E29	4
9525-00-803-3044	BULK		4920-00-816-6913	E29	5
4730-00-803-5049	37	9	5120-00-816-7091	E16	8
4730-00-803-5049	38	6	5340-00-817-0912	BULK	
4730-00-803-5926	66	3	5340-00-817-0917	BULK	
5365-00-803-7320	59	8	5340-00-817-2373	BULK	
4730-00-803-7981	13	29	5365-00-819-0015	37	106
5340-00-804-1252	BULK		5365-00-819-0015	38	105
4730-00-804-1589	64	5	5330-00-819-0017	41	5
5120-00-804-2629	E17	4	5320-00-819-5690	18	19
5365-00-804-6855	45	2	5365-00-820-9412	37	96
5330-00-805-2966	7	23	5365-00-820-9412	38	95
5330-00-805-2966	11	7	5306-00-820-9476	16	66
5306-00-805-6503	39	12	2840-00-821-2759	18	16
5315-00-806-5316	27	8	2840-00-821-2759	19	7
5310-00-807-1467	3	3	5340-00-821-5668	BULK	
5310-00-807-1467	11	9	5935-00-821-5839	BULK	
5310-00-807-1467	12	6	2840-00-823-5992	60	12
5310-00-807-1467	14	7	5315-00-823-8740	37	153
5310-00-807-1467	15	4	5315-00-823-8740	38	148
5310-00-807-1467	16	28	5315-00-823-8740	41	47
5310-00-807-1467	19	85	5315-00-823-8740	48	11
5310-00-807-1467	33	1	5315-00-823-8740	46	11
5310-00-807-1467	34	24	5315-00-823-8740	49	5
5310-00-807-1467	52	10			
5310-00-807-1467	53	7	5365-00-825-3767	27	47
5310-00-807-1467	55	4	5306-00-825-4803	59	17
5310-00-807-1467	56	14	5340-00-826-5653	BULK	
5310-00-807-1467	57	4	5120-00-828-3100	E10	3
5310-00-807-1467	58	9	2915-00-828-3417	37	216
5310-00-807-1467	63	3	2915-00-828-3417	38	205
5310-00-807-1467	64	9	5330-00-828-8059	19	29
5310-00-807-1468	3	2	5330-00-828-8060	19	31
5310-00-807-1468	4	4	4920-00-829-8168	E49	9
5310-00-807-1468	14	15	5305-00-830-1643	10	18
5310-00-807-1468	27	37	5365-00-830-4294	9	43
5310-00-807-1468	29	8	5365-00-830-4297	29	59
5310-00-807-1469	10	16	5360-00-831-0274	9	8
5310-00-807-1469	33	32	5310-00-831-2220	37	157
5310-00-807-1469	34	29	5310-00-831-2220	38	154
5310-00-807-1474	13	15	5310-00-831-2221	39	34
5310-00-807-5005	39	58	5310-00-831-2221	47	3
5310-00-807-5005	41	125	5310-00-831-2221	48	13
5315-00-808-0367	32	24	5310-00-831-2223	37	158
2840-00-808-3885	19	40	5310-00-831-2223	38	155
4920-00-808-5330	E19	6	5315-00-831-2225	43	6
4920-00-808-5344	E18	3	5315-00-831-2225	44	9
4920-00-808-5349	E17	7	5315-00-831-2229	45	10
4920-00-808-5350	E17	7	5315-00-831-2230	39	27
4920-00-808-5365	E52	4	5315-00-831-2230	36	19
2840-00-808-6014	5	28	5310-00-831-2232	42	6
2840-00-808-6431	5	21	5310-00-831-2234	41	76
5330-00-809-4365	29	6	5310-00-831-2236	41	94
5330-00-809-4365	65	4	5310-00-831-2237	41	100
5307-00-809-6832	28	3	5310-00-831-2238	37	137
5315-00-810-0505	47	32	5310-00-831-2238	38	135

STOCK NUMBER	FIGURE NO.	ITEM NO.
5310-00-831-2339	37	146
5310-00-831-2339	38	145
5310-00-831-2341	43	13
5310-00-831-2341	44	16
5305-00-831-4078	37	138
5305-00-831-4078	37	139
5305-00-831-4078	38	137
5305-00-831-4078	38	138
5306-00-831-4080	32	22
5306-00-831-4081	32	10
5305-00-831-4082	16	37
2840-00-832-5647	68	
2840-00-832-5648	68	
5330-00-832-5734	68	
5310-00-832-8289	19	43
5330-00-832-8448	19	47
5365-00-833-1220	5	5
5365-00-833-1220	6	5
5365-00-833-1221	5	5
5365-00-833-1221	6	5
5365-00-833-1222	5	5
5365-00-833-1222	6	5
5365-00-833-1224	5	5
5365-00-833-1224	6	5
5365-00-833-1225	5	5
5365-00-833-1225	6	5
5365-00-833-1227	5	5
5365-00-833-1227	6	5
5365-00-833-1228	5	5
5365-00-833-1228	6	5
5365-00-833-1229	5	5
5365-00-833-1229	6	5
5365-00-833-1230	5	5
5365-00-833-1230	6	5
5365-00-833-3537	5	5
5365-00-833-3537	6	5
5310-00-833-5446	10	5
5365-00-833-6691	9	24
5365-00-833-6692	32	9
5340-00-833-7039	BULK	
2915-00-834-1547	41	35
5315-00-834-3869	28	6
5315-00-834-3869	28	15
5365-00-834-6402	5	5
5365-00-834-6402	6	5
5365-00-834-6403	5	5
5365-00-834-6403	6	5
5365-00-834-6404	5	5
5365-00-834-6404	6	5
5120-00-834-6711	E21	5
5120-00-834-6712	E19	3
5120-00-834-6713	E26	1
5120-00-834-6714	E15	5
4730-00-834-9560	11	4
4730-00-834-9560	13	33
4730-00-834-9560	14	3
4730-00-834-9560	34	2
4730-00-834-9560	52	19
4730-00-834-9560	53	2
4730-00-834-9560	63	11
4730-00-834-9560	64	3
3120-00-836-0945	37	164
3120-00-836-0945	38	161
5365-00-837-0856	67	5
5306-00-837-7011	37	136
5306-00-837-7011	38	134
5305-00-837-7012	37	156
5305-00-837-7012	37	156
5305-00-837-7012	38	152
5305-00-837-7012	38	153
5310-00-837-8962	9	14
5365-00-837-9844	17	58
5360-00-838-1599	37	202
5360-00-838-1599	38	200
5360-00-838-2926	37	88
5360-00-838-2926	38	87
5360-00-838-2927	41	85
5360-00-838-2928	41	139
5360-00-838-2929	49	31
5310-00-838-4498	41	8

STOCK NUMBER	FIGURE NO.	ITEM NO.
4920-00-839-0710	F22	2
5120-00-839-0782	E5	3
5315-00-839-1840	29	37
2840-00-839-6776	16	49
2840-00-839-6777	20	29
2840-00-839-6778	8	34
2840-00-839-6780	8	44
2840-00-839-6781	8	39
5120-00-839-6913	F20	8
5120-00-839-7011	F8	3
5315-00-840-9236	39	86
5315-00-840-9236	41	28
5315-00-840-9236	41	169
5120-00-840-9830	F24	7
4920-00-841-0108	F16	4
4920-00-841-0270	F28	3
4920-00-841-0276	F42	6
4920-00-841-0277	F27	2
5180-00-841-0324	F11	2
4920-00-841-0414	F7	1
4920-00-841-0415	F19	5
2915-00-842-0129	48	66
2915-00-842-0142	48	61
2915-00-842-0152	39	110
2915-00-842-0155	36	26
5310-00-842-0665	9	13
5305-00-842-1538	37	21
5305-00-842-1538	38	18
5360-00-842-2415	37	190
5360-00-842-2415	38	189
5305-00-842-2430	16	54
5360-00-842-3783	37	126
5360-00-842-3783	38	123
5360-00-842-5047	45	5
5360-00-842-5047	46	5
4920-00-842-6021	F22	7
4920-00-842-6022	F22	7
4920-00-842-6028	E26	5
4920-00-842-6040	E16	7
4920-00-842-6118	F23	1
4920-00-842-6124	F53	1
4920-00-842-6126	F21	4
4920-00-842-6130	E21	7
4920-00-842-6278	E19	4
4920-00-842-6325	F2	5
5120-00-842-6360	F6	1
5120-00-842-6361	F43	6
5310-00-842-7812	9	5
5310-00-844-4872	58	15
5315-00-844-5644	37	63
5315-00-844-5644	38	62
5315-00-844-5644	41	49
5305-00-844-5828	39	111
5310-00-844-7565	30	10
5310-00-845-0555	13	25
5310-00-845-0556	13	23
5310-00-846-1658	30	43
5305-00-846-1675	27	69
5305-00-846-1676	27	71
5360-00-846-7328	41	173
5315-00-847-2135	41	59
5340-00-847-4556	37	218
5340-00-847-4556	38	208
5315-00-847-5751	39	105
5136-00-847-6585	E30	12
5120-00-849-3584	F22	7
5120-00-849-3590	F11	4
5120-00-849-3599	F11	4
5220-00-849-4350	E16	1
5360-00-850-5008	41	173
5360-00-850-5009	47	16
5360-00-850-5009	48	26
5180-00-851-1481	F11	2
5315-00-852-7420	30	49
5306-00-852-8036	17	37
3110-00-853-0677	27	55
3110-00-853-0677	27	82
4920-00-853-8474	E13	2
4920-00-854-4519	E56	5
4920-00-855-6069	F39	5

STOCK NUMBER	FIGURE NO.	ITEM NO.
2840-00-855-6102	21	12
5315-00-855-6805	38	77
5315-00-855-6805	41	2
5315-00-855-6805	44	31
5365-00-856-1115	5	5
5365-00-856-1115	6	5
3120-00-856-3210	39	79
5360-00-856-4023	39	100
5365-00-856-4511	35	18
5365-00-856-4511	36	10
5365-00-856-4512	35	18
5365-00-856-4512	36	10
5365-00-856-4513	35	18
5365-00-856-4513	36	10
4720-00-856-4794	63	6
4720-00-856-4796	11	3
4720-00-856-4796	52	1
4720-00-856-4796	53	1
5320-00-856-5637	27	61
5320-00-856-5637	27	78
5365-00-856-7789	18	14
5365-00-856-7789	19	6
5330-00-857-1457	27	35
5310-00-857-4548	18	24
5310-00-857-5557	27	98
5360-00-858-0001	60	8
2915-00-858-8460	37	161
2915-00-858-8460	38	158
2915-00-858-8461	38	149
2840-00-858-8592	18	11
2840-00-858-8592	19	2
5365-00-858-9431	60	11
2840-00-860-5551	16	55
2840-00-860-7492	5	25
2840-00-860-9466	9	54
3130-00-862-4856	9	19
2840-00-862-4862	18	27
2840-00-862-4862	19	38
5305-00-862-9326	5	19
5330-00-863-1197	27	59
4920-00-863-3827	E38	3
4920-00-863-3830	E46	1
4920-00-863-3832	E17	3
4920-00-863-3837	E46	5
5365-00-863-5737	9	18
2840-00-863-5739	5	63
4920-00-864-0463	E39	4
4920-00-864-0464	E38	2
2840-00-864-3460	5	51
4920-00-864-3464	F27	3
4920-00-864-3466	E23	2
4920-00-865-8023	E27	7
3040-00-865-8080	29	15
3040-00-865-8092	30	32
4920-00-866-0877	E24	1
4920-00-866-1077	E28	2
5305-00-866-1893	35	21
5305-00-866-1853	36	14
5305-00-866-7248	62	14
2915-00-867-6434	37	109
2915-00-867-6434	38	108
2595-00-867-6644	13	27
2925-00-868-1755	57	14
2925-00-868-1755	58	1
5330-00-868-8858	16	5
5330-00-868-8858	17	28
2915-00-869-8687	54	7
2915-00-870-0129	54	4
4920-00-871-0222	E52	2
4920-00-871-0225	E38	5
4920-00-871-0226	E37	3
4920-00-871-5132	E39	1
4920-00-871-5133	E33	4
5340-00-872-3347	35	3
2840-00-872-6125	26	8
2840-00-872-6126	16	45
5310-00-873-8028	E34	4
5310-00-873-8028	41	115
2915-00-874-0867	35	17
2915-00-874-0867	36	9
2915-00-874-0868	35	17
2915-00-874-0868	36	9
2915-00-874-0869	35	17
2915-00-874-0869	36	9
2915-00-874-0881	35	20
2915-00-874-0881	36	13
5120-00-875-2988	F34	1
1660-00-875-3194	61	18
5340-00-875-8008	37	221
5340-00-875-8008	38	210
5340-00-875-8008	47	36
5340-00-875-8008	48	73
5365-00-875-8007	39	102
2840-00-876-8715	29	26
4920-00-876-8718	F21	3
5360-00-877-5841	54	10
3110-00-877-6163	32	7
4920-00-878-5205	F28	7
4920-00-878-5207	F28	9
4920-00-878-5598	F54	1
3120-00-878-5604	F11	3
3120-00-878-5615	F11	3
5330-00-878-5929	19	25
3040-00-878-5940	29	15
5120-00-878-6153	E56	3
2840-00-878-6172	7	6
4920-00-878-6173	F6	1
5330-00-878-6201	6	14
5120-00-878-7797	E44	4
5340-00-879-0547	39	7
5315-00-879-0520	39	82
5305-00-879-1447	29	35
5315-00-879-2917	39	85
5315-00-879-7647	39	25
5315-00-879-7649	39	78
5310-00-879-9942	39	98
5310-00-880-2259	35	18
5310-00-880-2259	36	10
5340-00-880-7677	F16	3
5365-00-881-0044	54	8
5306-00-881-8735	18	22
5365-00-882-1658	27	72
4920-00-883-1672	F49	10
4920-00-883-1681	F25	7
4920-00-886-1285	F30	1
4920-00-886-1286	F52	1
4920-00-886-1287	F52	3
4920-00-886-1288	E39	2
5306-00-886-1453	18	15
5306-00-886-1453	19	3
5120-00-886-1794	F51	11
2915-00-886-3385	39	36
2915-00-886-3393	39	95
9905-00-886-8592	38	9
9905-00-886-8592	36	2
2915-00-886-9671	39	14
4730-00-888-4754	17	27
5310-00-888-7378	35	22
5310-00-888-7378	36	11
4920-00-889-7249	F2	6
5120-00-890-2760	F51	2
4920-00-890-5180	F30	5
4920-00-890-7766	E13	9
5120-00-891-1335	E20	3
4920-00-891-1366	F24	4
5120-00-891-3120	E24	2
4920-00-891-4653	F2	2
4920-00-891-8372	E29	7
5330-00-893-0347	27	21A
5360-00-893-1700	37	182
5360-00-893-1700	38	180
5305-00-893-1702	37	155
5305-00-893-1702	38	151
5340-00-893-1755	41	54
5120-00-893-2519	F5	3
5120-00-893-2520	F29	1
5365-00-893-2733	16	34
2840-00-893-2787	8	1
2840-00-893-2787	9	1
5305-00-893-2900	9	15

STOCK NUMBER	FIGURE NO.	ITEM NO.
5310-00-893-6003	8	6
5315-00-894-2548	19	69
5315-00-894-2549	19	69
5315-00-894-2550	19	69
2840-00-894-6531	30	18
5330-00-895-9333	60	5
5330-00-895-9477	60	4
5945-00-895-9478	60	2
2840-00-895-9479	5	2
2840-00-895-9489	7	4
2840-00-896-6274	27	68
3020-00-896-6275	27	56
2840-00-896-6276	5	3
2840-00-896-6276	6	3
3120-00-897-3792	15	9
5306-00-897-5270	22	6
5305-00-897-6509	27	70
2915-00-898-0113	37	97
2915-00-898-0113	38	96
5120-00-898-0657	E33	1
5305-00-898-6503	37	116
5305-00-898-6503	38	115
4920-00-898-7925	E2	2
3110-00-898-9692	29	31
5365-00-900-6351	39	60
5310-00-901-4954	62	20
5330-00-901-5091	62	19
5310-00-902-4098	20	10
5365-00-902-5601	62	17
5365-00-902-5602	62	17
5340-00-902-8533	62	17
5365-00-902-8534	62	17
5310-00-903-4633	21	17
5307-00-903-4865	7	31
5307-00-903-4866	7	31
1730-00-903-5019	F56	2
1730-00-903-5020	E1	1
5315-00-903-7349	16	40
5315-00-903-7349	17	48
5360-00-903-8615	62	13
6685-00-904-2437	F18	2
2840-00-904-2475	14	26
3120-00-904-2479	10	19
4730-00-904-9762	27	92
3120-00-904-9829	14	18
4810-00-906-2326	60	1
5310-00-906-3630	3	33
5220-00-906-3926	E23	3
5120-00-906-8056	E29	3
2995-00-906-9710	60	6
2995-00-906-9711	60	15
2995-00-906-9713	60	16
5120-00-906-9749	E35	7
5120-00-906-9754	E35	1
4920-00-906-9755	E28	4
5306-00-908-0373	20	13
5306-00-908-0374	20	13
4920-00-908-1634	E35	6
5305-00-908-9765	31	23
4920-00-909-1314	E45	2
4920-00-909-2597	E7	3
4920-00-909-2599	E33	5
4920-00-909-4204	E26	4
5120-00-909-4209	E4	3
5120-00-909-4210	E4	3
4730-00-910-3068	59	13
4720-00-910-3177	66	24
5120-00-911-3703	E9	5
3120-00-911-9184	31	15
5340-00-911-9255	4	9
5340-00-911-9262	27	90
5310-00-911-9447	20	16
4920-00-912-1171	E17	6
5305-00-912-4816	52	14
5305-00-912-4817	53	6
5305-00-912-4817	55	1
5305-00-912-4817	57	10
5305-00-912-4817	63	12
5305-00-912-4818	52	9
5305-00-912-4838	53	24
5305-00-912-7287	38	44
5305-00-912-7287	36	35
5305-00-912-7292	35	43
5305-00-912-7298	36	36
5340-00-913-3871	4	10
5310-00-913-4028	31	14
5330-00-913-4103	15	32
5340-00-913-5378	BULK	
5120-00-913-5526	E5	3
5315-00-914-6301	10	4
5315-00-914-6509	31	17
5120-00-914-9901	F21	2
5365-00-915-0046	21	5
2840-00-915-5509	29	30
2840-00-915-5510	29	33
2840-00-915-5511	29	33
2840-00-915-5512	29	30
2840-00-915-5513	29	33
2840-00-915-5522	29	17
3040-00-915-5552	32	43
2840-00-915-5558	32	19
5365-00-915-5567	30	13
3040-00-915-5552	30	25
2840-00-915-5554	30	14
3040-00-915-5555	32	33
5365-00-916-2351	29	21
5330-00-916-2407	30	15
5330-00-916-2408	29	23
5315-00-916-2410	32	34
2840-00-916-2418	29	18
5310-00-916-2419	30	28
5365-00-916-2424	30	7
5365-00-916-2425	30	7
5365-00-916-2427	30	7
5365-00-916-2429	32	38
5365-00-916-2432	32	38
5365-00-916-2433	32	39
5365-00-916-2435	32	31
5365-00-916-2436	32	31
5365-00-916-2437	32	31
5340-00-916-2439	BULK	
5340-00-916-2551	32	35
5340-00-916-2552	32	27
5365-00-917-2835	20	17
5310-00-917-6046	20	27
5310-00-917-6046	21	23
4920-00-917-7101	E26	5
5120-00-917-7116	E27	1
5365-00-917-7139	30	40
5310-00-917-7140	30	43
4920-00-917-9978	E14	6
5120-00-917-9977	F24	5
5330-00-918-0882	62	27
4920-00-919-0190	E42	1
4920-00-919-0195	E39	5
4920-00-919-1348	E38	4
4920-00-919-1349	E38	4
5120-00-919-2377	F1	2
4920-00-919-6052	F42	1
5306-00-919-8513	14	12
5120-00-920-4223	F1	4
5120-00-920-4224	F1	4
5120-00-920-4242	F1	3
5120-00-920-4246	E2	4
5120-00-920-5438	F3	6
5120-00-920-5439	F3	8
5305-00-921-5408	32	14
4920-00-921-7076	E31	1
2840-00-922-5845	17	23
2840-00-922-5852	28	20
5305-00-922-6286	43	25
5305-00-922-6286	44	28
5305-00-922-6286	48	5
2840-00-922-8282	24	18
3020-00-923-0561	32	36
4920-00-923-2558	F33	3
5330-00-923-2558	16	43
4920-00-923-2773	E12	[illegible]
4920-00-923-2775	F7	4
5120-00-923-3414	F13	4

STOCK NUMBER	FIGURE NO.	ITEM NO.	STOCK NUMBER	FIGURE NO.	ITEM NO.
5120-00-923-3423	E15	1	2840-00-925-9621	3	20
5120-00-923-3431	E14	1	2840-00-925-9621	68	
5120-00-923-3433	E15	2	2840-00-925-9644	3	21
5120-00-923-3435	E13	5	2840-00-925-9644	68	
5120-00-923-3443	E15	2	2840-00-925-9707	19	77
5120-00-923-3445	E15	2	2840-00-925-9747	25	3
5120-00-923-3449	E14	3	2840-00-925-9834	3	19
5120-00-923-3454	E14	5	2840-00-925-9834	68	
5120-00-923-3458	E15	3	2840-00-925-9967	19	16
5120-00-923-3598	E12	3	2840-00-925-9986	19	14
2840-00-923-4079	30	2	5120-00-927-1288	E18	4
4920-00-923-4301	E13	3	3120-00-927-2618	E11	3
4920-00-923-4302	E6	5	4920-00-927-4448	E12	7
4920-00-923-4304	E13	7	4920-00-927-4455	E12	8
4920-00-923-4306	E13	10	4920-00-927-4456	E13	11
4920-00-923-4307	E31	3	4920-00-927-4457	E12	9
5365-00-923-4426	32	31	4920-00-927-4459	E12	6
5365-00-923-4427	32	31	4920-00-927-4470	E12	1
3120-00-924-3558	48	45	2840-00-927-5765	24	38
3120-00-924-3558	48	52	5315-00-927-5794	7	41
2915-00-924-3560	52	35	5365-00-927-9941	66	22
2840-00-924-3562	15	11	5340-00-928-2008	56	19
2840-00-924-3617	66	11	5365-00-928-3876	14	14
2940-00-924-3620	E51	14	6685-00-928-4063	68	5
2840-00-924-3626	29	45	3110-00-929-3685	39	51
2840-00-924-3626	31	1	5330-00-929-5816	17	56
2840-00-924-3627	66	9	2840-00-929-8443	24	36
2840-00-924-3630	66	15	2840-00-929-8444	24	16
2840-00-924-3634	25	3	4920-00-929-8451	E11	3
2840-00-924-3649	30	9	4920-00-929-8453	E11	3
5365-00-924-5447	32	31	5310-00-931-4785	21	14
2840-00-924-7625	25	19	9505-00-931-7272	BULK	
2840-00-924-7626	31	16	2840-00-931-8269	17	10
2840-00-924-7657	66	7	2840-00-931-8270	28	12
2840-00-924-7767	25	18	2840-00-931-8272	17	35
2840-00-924-7807	17	17	4920-00-932-5151	E16	5
2840-00-924-7933	23	24	4730-00-933-0924	19	83
2840-00-924-7985	17	63	5340-00-933-1370	25	7
2840-00-924-8003	31	21	5305-00-934-0058	66	10
2840-00-924-8007	31	19	5365-00-935-3668	9	29
2840-00-924-8008	6	13	5365-00-935-5622	35	19
2840-00-924-8521	23	22	5365-00-935-5623	36	10
2840-00-924-8545	5	43	5305-00-935-7521	19	21
2840-00-924-8551	23	20	3110-00-937-1182	30	12
2840-00-924-8571	23	10	5330-00-937-2547	17	53
2840-00-924-8577	5	33	2995-00-937-3142	35	11
2840-00-924-8636	17	6	2995-00-937-3142	36	21
2840-00-924-8648	14	11	5330-00-937-5559	35	16
2840-00-924-8648	15	1	5330-00-937-5595	36	24
2840-00-924-8650	5	38	5365-00-937-8877	42	11
2840-00-925-2971	66	19	5365-00-937-8877	43	51
2840-00-925-2972	23	2	5365-00-937-8877	44	57
2840-00-925-2973	14	23	5365-00-937-8878	42	11
2840-00-925-2976	31	13	5365-00-937-8878	43	51
2840-00-925-2980	15	16	5365-00-937-8878	44	57
2840-00-925-3021	55	15	5310-00-937-8879	42	11
2840-00-925-3028	15	18	5310-00-937-8879	43	51
2840-00-925-3299	55	21	5310-00-937-8879	44	57
2840-00-925-4145	17	18	5310-00-937-8880	42	11
2840-00-925-4146	25	31	5310-00-937-8880	43	51
2840-00-925-4148	25	11	5310-00-937-8880	44	57
2840-00-925-4149	25	13	2840-00-938-3650	3	19
2840-00-925-4150	25	5	2840-00-938-3651	3	19
2840-00-925-4151	25	34	5306-00-939-2285	18	31
2840-00-925-4152	25	6	2840-00-939-5552	29	19
2840-00-925-4153	17	20	5120-00-939-7585	E3	1
2840-00-925-4156	17	8	2840-00-939-7718	30	37
2840-00-925-4159	17	21	4730-00-939-8492	19	81
2840-00-925-4186	7	1	5305-00-939-9146	35	19
2840-00-925-4186	29	56	5305-00-939-9146	36	12
5305-00-925-4774	37	147	5305-00-939-9147	35	12
5305-00-925-4774	38	146	5305-00-939-9147	36	8
2840-00-925-7012	17	68	5305-00-939-9147	37	74
2840-00-925-7307	25	22	5305-00-939-9147	38	73
2840-00-925-7332	19	10	5305-00-939-9150	39	111
2840-00-925-8025	19	13	5305-00-939-9172	34	18
2840-00-925-8026	19	15	5305-00-939-9172	35	13
2840-00-925-9560	19	67	5305-00-939-9172	36	22
2840-00-925-9620	3	23	5305-00-939-9187	41	121
2840-00-925-9620	68		5305-00-939-9188	38	30

STOCK NUMBER	FIGURE NO.	ITEM NO.	STOCK NUMBER	FIGURE NO.	ITEM NO.
5305-00-939-9188	36	27	2915-00-944-8237	41	176
5305-00-939-9188	37	11	2915-00-944-8242	38	192
5305-00-939-9188	38	7	2915-00-944-8244	42	15
5305-00-939-9189	37	20	2915-00-944-8248	48	46
5305-00-939-9189	38	17	2915-00-944-8302	37	92
5305-00-939-9189	41	92	2915-00-944-8303	38	91
5305-00-939-9189	48	3	2915-00-944-8312	48	9
5305-00-939-9189	49	7	2915-00-944-8313	47	13
5305-00-939-9190	39	9	2915-00-944-8313	46	19
5305-00-939-9209	39	42	2915-00-944-8367	44	19
5305-00-939-9221	41	69	2915-00-944-8435	48	53
5305-00-939-9221	48	38			
5305-00-939-9222	39	29	2915-00-944-8486	48	6
5305-00-939-9222	44	43	2915-00-944-8509	48	54
5305-00-939-9230	16	1	2915-00-944-8521	48	56
5305-00-939-9230	17	24	2915-00-944-8525	48	60
5305-00-939-9230	41	7	3110-00-944-8532	41	68
5305-00-939-9230	43	7	2840-00-945-0208	30	11
5305-00-939-9230	44	10	2840-00-945-0209	30	2
5305-00-939-9230	47	27	5360-00-945-0210	66	4
5305-00-939-9230	61	15	5365-00-945-3502	17	9
4920-00-940-0346	E33	7	5365-00-945-3510	66	14
5305-00-940-9488	35	40	5330-00-945-3511	19	10
5305-00-940-9488	47	9	2840-00-945-4522	29	33
5305-00-940-9488	48	20	3020-00-945-4562	29	32
5305-00-940-9489	41	149	2840-00-945-4771	30	11
5305-00-940-9498	47	21	5360-00-945-5558	66	13
5305-00-940-9513	48	31	2840-00-945-5601	29	30
2840-00-941-0536	24	3	2840-00-945-5602	6	17
5305-00-941-3551	61	6	2840-00-945-5613	23	17
5305-00-941-9437	60	3	2840-00-945-5617	31	10
5305-00-942-5121	41	93	2840-00-945-5619	19	49
2840-00-942-6230	19	33	5315-00-945-5737	41	180
2840-00-942-7073	19	17	5310-00-945-5750	21	4
2840-00-942-7093	19	62	5315-00-945-5769	41	26
2840-00-942-7304	17	7	2915-00-945-5840	36	43
5305-00-942-8431	37	161A	2915-00-945-5846	41	179
5305-00-942-8431	38	159	2915-00-945-5851	37	96
5305-00-942-8431	39	88	2915-00-945-5851	38	93
2840-00-942-9548	25	9	2915-00-945-5874	41	32
2840-00-942-9755	13	4	2915-00-945-5880	41	15
2840-00-943-0054	17	65	2915-00-945-5884	52	24
5365-00-943-0505	32	29	2915-00-945-5900	52	23
5365-00-943-1290	30	41	2840-00-945-6095	29	30
2840-00-943-2206	6	55	2840-00-945-6096	29	33
2840-00-943-2216	25	35	2840-00-945-8225	17	73
3455-00-943-2345	E51	9	3020-00-945-9016	29	32
2840-00-943-2375	21	6	4920-00-945-9905	E45	4
2840-00-943-2382	19	71	4920-00-945-9907	F30	9
2840-00-943-2409	21	22			
2840-00-943-2411	19	8	2840-00-946-1496	19	7
2840-00-943-2422	56	1	4920-00-946-2188	E12	4
2840-00-943-2529	13	6	4940-00-946-2195	F12	5
2840-00-943-2545	10	8	2840-00-946-2416	3	18
2840-00-943-2545	13	1	2840-00-946-2416	66	
5365-00-943-2616	32	31	4920-00-946-4860	F13	1
2840-00-943-9876	19	61	5330-00-946-4877	19	20
2840-00-944-0520	19	50	2995-00-946-6603	19	14
5315-00-944-1053	15	6	5330-00-946-7073	29	15
5315-00-944-1097	19	69	3120-00-946-9613	49	23
5315-00-944-1098	48	50	5365-00-947-3184	19	70
5315-00-944-1099	41	29	5365-00-947-3185	19	70
2915-00-944-1102	49	22	5365-00-947-3187	19	73
2840-00-944-2516	19	11	5365-00-947-3150	32	38
2840-00-944-2547	23	12	5315-00-947-3250	21	8
2840-00-944-2567	6	2	5306-00-947-3552	30	44
5305-00-944-4270	48	47	5315-00-947-3553	41	128
5305-00-944-4272	19	48	5315-00-947-3555	37	93
5305-00-944-4273	45	3	5315-00-947-3555	38	92
5305-00-944-4273	46	3	5365-00-947-3561	19	15
2840-00-944-4852	30	27	5330-00-947-6221	29	21
2840-00-944-4853	30	30	2840-00-947-6222	19	5
2840-00-944-4501	66	16	2840-00-947-6225	23	31
2915-00-944-7295	19	30	5315-00-947-6254	48	44
2840-00-944-7296	19	51	3040-00-947-6264	48	42
2840-00-944-7597	23	30	2915-00-947-6265	48	59
2840-00-944-7808	21	7	5365-00-947-6266	48	11
5310-00-944-8062	15	13	5310-00-947-9858	14	24
5310-00-944-8168	41	129	5310-00-947-9859	41	21
2915-00-944-8234	44	60	5305-00-947-9870	48	34

STOCK NUMBER	FIGURE NO.	ITEM NO.
5365-00-947-9871	32	8
5365-00-947-9880	25	14
5365-00-948-0616	23	32
5330-00-948-0555	15	22
5306-00-948-3236	23	5
5306-00-948-3243	17	61
5306-00-948-3243	25	30
5365-00-948-3245	48	7
5365-00-948-8031	17	62
5365-00-948-8032	17	62
3120-00-948-9257	41	24
3120-00-948-9269	41	22
2840-00-948-9351	10	21
2840-00-948-9358	10	20
5365-00-948-9565	44	4
5365-00-948-9575	41	33
2840-00-949-5456	10	8
2840-00-949-5456	13	1
2840-00-949-5457	13	10
2840-00-949-5471	13	26
5310-00-949-5488	23	16
5365-00-949-5495	17	62
5340-00-949-5503	41	25
2840-00-949-7809	29	30
5305-00-949-7863	31	5
3110-00-949-7986	30	26
5310-00-949-8014	41	23
2840-00-949-8219	19	24
5330-00-949-9271	17	46
5310-00-950-0039	27	14
4920-00-950-1795	E11	3
4920-00-950-1976	E11	3
2925-00-950-2516	56	19
4920-00-950-2535	E11	3
4920-00-950-2597	E11	3
5325-00-950-2664	21	9
5365-00-950-2746	30	34
5365-00-950-2905	6	15
5365-00-950-2928	6	15
5365-00-950-2988	6	15
5365-00-950-2991	6	15
5365-00-950-2992	6	15
5365-00-950-2993	6	15
5365-00-950-3002	6	15
5365-00-950-3008	6	15
5365-00-950-3051	6	15
5365-00-950-3232	6	15
2925-00-950-6824	21	19
2840-00-950-6850	20	15
2840-00-950-6860	20	18
2840-00-950-6869	20	12
2915-00-950-8456	35	70
5306-00-951-0776	8	5
5330-00-951-8683	25	17
5305-00-952-0959	15	12
5315-00-952-7162	41	165
5120-00-952-7217	E11	5
5120-00-952-7218	E29	7
5120-00-952-7256	E42	2
5120-00-952-7257	E15	2
5315-00-952-7390	48	40
5310-00-952-7392	6	16
5305-00-952-7403	31	12
5365-00-952-7451	30	35
5315-00-952-7566	9	31
5315-00-952-7566	9	55
5365-00-952-7570	29	16
2915-00-953-0562	39	34
2925-00-953-2353	55	7
2915-00-953-4547	43	17
2915-00-953-4548	41	49
2915-00-953-4950	45	6
2915-00-953-4951	41	96
2915-00-953-4952	37	117
2915-00-953-4952	38	117
2915-00-953-4953	37	166
2915-00-953-4953	38	164
2915-00-953-4956	45	32
2915-00-953-4957	37	4
2915-00-953-4558	47	12

STOCK NUMBER	FIGURE NO.	ITEM NO.
2915-00-953-4558	48	22
2915-00-953-4559	41	113
2915-00-953-4560	47	18
2915-00-953-4560	48	27
2915-00-953-4561	43	18
2915-00-953-4561	44	20
2915-00-953-4562	43	53
2915-00-953-4562	44	59
2915-00-953-4563	45	33
2915-00-953-4564	45	29
2915-00-953-4565	37	45
2915-00-953-4565	38	42
2915-00-953-4566	43	35
2915-00-953-4566	44	40
2915-00-953-4567	37	103
2915-00-953-4567	38	102
2915-00-953-4582	41	66
2915-00-953-4584	41	81
5330-00-953-4585	41	88
2915-00-953-4587	47	25
2915-00-953-4587	48	36
2915-00-953-4588	47	23
2915-00-953-4591	35	60
2915-00-953-4591	36	30
2915-00-953-4592	41	19
2915-00-953-4594	47	34
2915-00-953-4597	43	30
2915-00-953-4599	41	71
2915-00-953-5000	41	73
2915-00-953-5002	41	67
5310-00-953-5015	41	43
3110-00-953-5407	41	37
3110-00-953-5408	45	9
3110-00-953-5408	46	9
3120-00-953-5727	43	50
3120-00-953-5727	44	56
5310-00-953-5517	41	106
5305-00-954-0107	47	14
5305-00-954-0107	48	23
5315-00-954-1138	47	40
5315-00-954-1138	48	68
5315-00-954-1139	47	40
5315-00-954-1139	48	68
3120-00-954-1254	41	107
5365-00-954-1255	41	119
5365-00-954-1256	41	118
5310-00-954-2742	41	45
5310-00-954-2746	41	13
5310-00-954-2746	48	55
5365-00-954-3474	41	116
5315-00-954-3480	41	181
5315-00-954-3481	41	181
5315-00-954-3482	41	181
5306-00-954-3485	41	105
5365-00-954-3486	43	39
5365-00-954-3486	44	45
2915-00-954-4237	50	17
3120-00-954-4238	41	19
5305-00-954-4247	41	12
2840-00-954-4278	66	12
5330-00-954-4472	21	18
2840-00-954-4477	21	13
2840-00-954-4480	21	23
2840-00-954-4700	21	10
2840-00-954-5850	31	25
2840-00-954-6117	30	17
2840-00-954-6142	30	42
2840-00-954-6185	30	50
2840-00-954-6159	30	21
5315-00-954-6829	41	36
5315-00-954-6830	41	63
5315-00-954-6831	41	57
5315-00-954-6832	41	46
5315-00-954-7104	47	40
5315-00-954-7104	48	68
4920-00-954-8561	E11	1
5315-00-954-8565	48	37
5315-00-954-8565	48	43
3110-00-954-9163	30	33
4920-00-955-0030	E11	7

STOCK NUMBER	FIGURE NO.	ITEM NO.
2915-00-555-0623	43	37
2915-00-555-0623	44	42
2915-00-555-0886	37	145
2915-00-555-0886	38	144
2915-00-555-0889	39	17
2915-00-555-0890	39	19
2915-00-955-0891	37	111
2915-00-555-0891	38	110
5920-00-955-9392	E51	10
5320-00-559-9357	21	16
5977-00-555-9484	E51	13
5340-00-555-9664	41	131
5315-00-555-9667	23	11
4720-00-956-2942	50	9
5310-00-957-1001	42	9
2840-00-957-2389	56	25
2840-00-957-2392	56	15
2840-00-957-2536	31	7
2840-00-957-2709	64	17
4920-00-957-4060	E8	11
4920-00-957-4061	E46	3
2840-00-957-6580	17	29
2840-00-957-6634	31	2
5120-00-957-7134	E45	3
5315-00-957-7500	45	8
5315-00-957-7500	46	8
5315-00-957-7500	48	49
4730-00-957-7583	52	26
5315-00-957-7584	19	12
2840-00-957-8584	31	22
2840-00-957-9055	14	13
2840-00-957-9091	23	3
2925-00-957-9947	56	17
5330-00-958-2430	5	16
5330-00-958-2430	6	20
5330-00-958-2430	24	29
5310-00-958-4505	13	28
5305-00-958-5462	BULK	
3110-00-958-7325	62	12
4730-00-958-8195	33	14
5330-00-959-1048	11	13
5330-00-959-1048	13	34
5330-00-959-1048	34	3
2840-00-959-5744	24	25
2840-00-959-5744	25	26
5315-00-959-5966	41	59
2915-00-959-6282	19	28
5120-00-959-7634	E47	3
5120-00-959-7635	E13	6
2840-00-960-0174	19	23
2915-00-960-1090	39	23
5365-00-960-3909	41	30
2840-00-961-1383	16	16
2840-00-961-1384	16	6
2840-00-961-1385	16	26
2840-00-961-1386	5	13
2840-00-961-1387	24	15
5365-00-961-1388	13	26
2840-00-961-1391	16	24
2840-00-961-1394	5	9
2840-00-961-1394	6	9
2840-00-961-1395	24	34
2840-00-961-1397	13	10
2840-00-961-1398	13	21
2840-00-961-1399	13	2
9905-00-962-0082	62	34
2915-00-962-0084	54	9
2915-00-962-0087	54	5
4320-00-962-0088	62	25
2915-00-962-0098	54	6
2840-00-963-1101	16	19
2915-00-963-1103	41	136
2915-00-963-1107	39	62
2915-00-963-1108	41	127
2915-00-963-1109	33	13
6685-00-963-1115	57	1
2995-00-963-1117	13	27
5330-00-963-1139	5	15
5330-00-963-1139	6	19
5330-00-963-1139	24	30
4730-00-963-5333	13	22
2840-00-963-6661	16	17
2840-00-963-6662	16	20
5330-00-964-0058	27	40
5310-00-964-1052	41	20
5360-00-964-1216	48	58
3040-00-964-2109	67	12
2915-00-964-2273	19	27
2840-00-964-2244	19	68
5315-00-964-2675	35	63
3120-00-964-6475	35	86
5360-00-964-7384	35	39
5365-00-965-1158	11	12
5365-00-965-1158	27	96
5365-00-965-1158	50	23
5365-00-965-1158	63	22
5315-00-965-5174	35	101
5315-00-965-6506	35	99
3120-00-965-7383	41	171
4720-00-966-2201	64	1
4720-00-966-2203	64	11
4720-00-966-2204	66	23
4720-00-966-2205	52	20
4720-00-966-2206	14	8
4720-00-966-2230	66	25
4720-00-966-2232	12	2
4720-00-966-2233	14	2
4720-00-966-2239	34	1
4720-00-966-2240	14	1
5305-00-966-2431	3	32
2840-00-966-2504	16	22
2840-00-966-2505	16	27
2915-00-966-6053	37	7
2915-00-966-6053	38	4
5315-00-966-7601	39	63
5315-00-966-7601	41	128
2915-00-966-5333	35	20
2915-00-966-5334	35	81
2915-00-966-5335	37	151
2915-00-966-5352	37	149
2915-00-966-5353	35	87
2915-00-966-5354	35	26
2915-00-966-5355	37	85
2915-00-966-5355	38	84
2915-00-966-5356	37	192
2915-00-966-5356	38	190
2915-00-966-5357	37	154
2915-00-966-5357	38	150
2915-00-967-1748	35	80
2915-00-967-1750	47	31
5365-00-967-7560	16	18
5365-00-967-7561	16	21
5310-00-967-5619	37	90
5310-00-967-5619	38	89
2840-00-968-4634	16	10
5310-00-969-6019	37	8
5310-00-969-6019	38	5
5305-00-969-6487	52	21
5305-00-969-6487	52	27
5305-00-969-6487	56	10
5305-00-969-6487	64	7
2840-00-971-6245	17	16
2840-00-971-6279	16	47
4730-00-971-8670	19	82
5330-00-975-0245	19	22
2840-00-975-0254	29	36
5310-00-975-9407	60	7
2840-00-976-5303	27	17
2840-00-976-5304	20	14
2915-00-976-5307	20	7
2915-00-976-5308	55	20
2840-00-977-1039	29	28
2840-00-977-1043	20	24
2915-00-977-1046	35	66
3120-00-977-1047	41	178
2915-00-977-1049	35	30
2915-00-977-1050	37	115
2915-00-977-1050	38	114
2915-00-977-1051	37	26
2915-00-977-1051	38	23

STOCK NUMBER	FIGURE NO.	ITEM NO.
2915-00-977-1052	35	38
2915-00-977-1052	47	7
2915-00-977-1052	48	16
2915-00-977-1058	41	147
5315-00-977-1062	37	165
5315-00-977-1062	38	163
2915-00-977-1065	37	99
2915-00-977-1065	38	98
2915-00-977-1066	37	142
2915-00-977-1066	38	141
5120-00-977-2191	E15	4
5310-00-977-5721	37	212
5310-00-977-5721	40	9
4320-00-977-7488	27	2
4320-00-977-7488	62	1
5120-00-978-2266	E48	6
5120-00-978-2267	E48	7
5120-00-978-2269	E6	10
5120-00-978-2271	E10	2
5120-00-978-2272	E46	6
5120-00-978-2273	E46	7
5120-00-978-2274	E46	8
2840-00-979-3741	4	11
2840-00-979-3741	33	12
2840-00-979-3745	33	11
4730-00-979-3771	16	4
5120-00-979-5646	E42	10
5120-00-979-5649	E9	4
5120-00-979-5651	E20	5
5120-00-979-5653	E20	9
5120-00-979-7574	E20	2
5120-00-979-7575	E37	2
5120-00-979-7576	E37	9
5120-00-979-7577	E42	9
2840-00-979-8418	5	47
2840-00-979-8432	5	45
4920-00-979-8932	E43	12
2840-00-980-9423	59	19
2840-00-980-9469	20	26
2915-00-981-3078	53	25
2915-00-981-3078	54	1
2840-00-981-5970	33	27
2840-00-981-5970	34	7
2840-00-981-6997	5	53
5315-00-983-0505	37	163
5315-00-983-0505	38	160
2840-00-983-4027	BULK	
5340-00-983-6604	10	22
5340-00-983-6604	11	15
4920-00-983-7359	E19	6
4920-00-983-7360	E24	5
5360-00-983-7399	50	16
4920-00-983-7508	E25	6
4920-00-983-7514	E22	6
4920-00-983-7544	E16	9
4920-00-983-7555	E5	1
5365-00-983-8053	50	14
4720-00-984-2628	53	14
5306-00-984-2641	4	3
5330-00-984-7138	55	18
5340-00-985-0213	57	9
5365-00-985-4424	51	17
5365-00-985-4725	16	30
5120-00-986-5949	E5	4
2925-00-986-7073	55	9
2915-00-986-7795	53	21
4720-00-986-9991	63	15
4720-00-986-9991	64	16
2915-00-987-0419	37	101
2915-00-987-0419	38	100
2915-00-987-0420	37	167
2915-00-987-0420	38	165
2915-00-987-0421	37	23
2915-00-987-0421	38	20
2915-00-987-0423	41	130
2915-00-987-0424	41	89
2915-00-987-0428	42	14
2915-00-987-0431	35	72
2915-00-987-0432	47	30
2915-00-987-0433	47	26
2915-00-987-2109	35	38
5365-00-987-9925	5	5
5365-00-987-9925	6	5
5365-00-987-9926	5	5
5365-00-987-9926	6	5
5365-00-987-9933	25	24
3120-00-987-9937	41	148
5360-00-987-9936	37	66
5360-00-987-9936	38	65
5365-00-988-5222	16	44
5120-00-988-8852	E22	3
5120-00-989-0017	E25	9
4920-00-989-0018	E55	1
4920-00-989-0020	E20	7
4920-00-989-0024	E21	6
5120-00-989-0038	E25	5
5365-00-989-2827	5	5
5365-00-989-2827	6	5
5365-00-989-2828	5	5
5365-00-989-2828	6	5
5365-00-989-2829	5	5
5365-00-989-2829	6	5
5365-00-989-2830	25	24
2915-00-989-4341	38	142
3110-00-989-7002	37	67
3110-00-989-7002	38	66
3020-00-989-7003	45	13
2915-00-989-9790	37	110
2915-00-989-9790	38	109
3120-00-989-9791	35	32
3120-00-989-9791	41	64
5315-00-990-1360	41	162
5315-00-990-2596	37	178
5315-00-990-2596	38	176
5330-00-990-2853	16	41
5330-00-990-2853	17	45
2840-00-990-3221	60	9
5330-00-990-5194	27	34
5306-00-990-9291	30	47
2915-00-991-0969	35	61
2915-00-991-0971	39	41
2915-00-991-0973	35	64
2915-00-991-0974	37	114
2915-00-991-0974	38	113
2915-00-991-0975	37	123
2915-00-991-0975	38	120
2915-00-991-0976	37	214
2915-00-991-0976	40	11
2915-00-991-0978	47	28
2915-00-991-0980	41	126
2915-00-991-0981	41	91
2915-00-991-0982	41	176
2915-00-991-0983	42	17
2915-00-991-0984	45	7
2915-00-991-0984	46	7
2915-00-991-0985	37	191
2915-00-991-0985	38	189
2915-00-991-0986	41	98
2915-00-991-0987	42	13
5315-00-991-7011	29	38
4720-00-991-8473	50	10
2915-00-991-9145	51	6
2915-00-991-9145	51	13
2915-00-992-1133	37	58
2915-00-992-1133	38	57
2915-00-992-1134	45	6
2915-00-992-1136	37	55
2915-00-992-1136	38	54
4820-00-992-1137	45	30
2915-00-992-1138	41	4
2915-00-992-1139	41	168
2915-00-992-1140	37	133
2915-00-992-1140	38	130
2915-00-992-1141	37	130
2915-00-992-1141	38	127
2915-00-992-1142	37	134
2915-00-992-1142	38	132
2915-00-992-1143	37	184
2915-00-992-1143	38	182
2915-00-992-1144	35	55

STOCK NUMBER	FIGURE NO.	ITEM NO.	STOCK NUMBER	FIGURE NO.	ITEM NO.
2915-00-992-1144	36	49	2915-01-005-9156	35	1
2915-00-992-1146	37	62	2915-01-005-9157	34	20
2915-00-992-1146	38	61	2915-01-005-9157	36	1
2915-00-992-1147	41	151	2840-01-006-1118	6	30
2915-00-992-1150	37	44	5365-01-006-1148	6	18
2915-00-992-1150	38	41	5365-01-006-1149	6	18
2915-00-992-1152	49	9	5365-01-006-1150	6	18
2915-00-992-1153	37	193	5365-01-007-1066	6	18
2915-00-992-1153	38	191	2840-01-008-1373	6	13
4320-00-992-1154	37	57	2840-01-008-5729	9	26
4320-00-992-1154	38	56	2840-01-008-5730	3	1
4320-00-992-1154	49	1	2840-01-008-5553	55	21
2915-00-992-1156	41	6	2840-01-008-5582	25	32
2915-00-992-1157	41	132	2840-01-008-5583	23	19
2915-00-992-1158	37	199	2840-01-008-5586	25	36
2915-00-992-1160	37	171	2840-01-008-7887	19	66
2915-00-992-1160	38	169	5330-01-008-8243	6	19
2915-00-992-1161	37	206	2840-01-009-3718	19	65
2915-00-992-1161	40	2	2840-01-009-3719	23	21
2915-00-992-1162	35	54	5306-01-010-1093	19	60
2915-00-992-1162	36	52	5340-01-010-1514	9	84
2915-00-992-1163	41	174	2840-01-010-5828	17	1
2915-00-992-1164	41	3	2840-01-010-5545	19	63
2915-00-992-1165	37	41	2840-01-011-1538	17	51
2915-00-992-1165	38	38	2840-01-011-2007	17	19
2840-00-992-4622	KITS		2840-01-011-5045	25	27
2840-00-992-4622	30		5306-01-013-2562	3	6
2915-00-992-5759	41	101	5306-01-013-5708	10	13
2915-00-992-5761	35	48	5310-01-014-5135	10	
2915-00-992-5761	36	43	5306-01-015-0587	10	9
2915-00-992-5762	37	189	3110-01-015-8831	17	43
2915-00-992-5762	38	187	3110-01-015-8831	25	25
5305-00-993-1612	41	146	5365-01-017-5145	36	13
4520-00-994-1129	E24	6	5365-01-017-5146	36	13
2915-00-994-2016	33	25	5365-01-017-5147	36	13
2915-00-994-3258	37	201	2915-01-018-2489	35	65
2915-00-994-3258	38	199	2915-01-018-2490	35	54
5120-00-994-3282	E3	3	2915-01-018-2491	35	52
5365-00-994-4272	25	24	2915-01-018-3819	41	66
5365-00-994-4273	25	24	2915-01-018-3820	41	113
5365-00-994-4274	25	24	2915-01-018-3821	38	197
5365-00-994-4275	25	24	2915-01-018-3822	41	132
5365-00-994-4276	25	24	2915-01-018-3823	41	127
5365-00-994-4277	25	24	2915-01-018-3824	44	3
2840-00-994-4301	5	58	2915-01-018-3825	43	30
2840-00-994-4302	33	20	2915-01-018-3825	44	32
2840-00-994-4302	34	14	2915-01-018-3827	37	67
2840-00-994-4303	55	12	2915-01-018-3827	38	43
5365-00-994-9479	22	12	2915-01-018-3828	38	33
5305-00-995-6914	16	52	5315-01-018-3854	38	34
5310-00-995-6519	4	7	5306-01-019-3490	10	13
4920-00-996-2171	E8	5	2915-01-019-6146	41	81
2915-00-996-7426	35	23	4920-01-020-1689	E52	9
2915-00-996-7426	36	15	4920-01-020-1690	E56	10
2915-00-996-7427	39	104	2840-01-029-8740	23	6
2915-00-996-7428	37	119	2840-01-031-8758	23	1
2915-00-996-7428	38	118	5315-01-038-1446	6	24
2915-00-996-7429	39	73	5315-01-038-1448	6	29
2840-00-996-7446	16	53	5365-01-044-8091	6	18
2915-00-996-7449	37	143	5365-01-044-8092	6	18
4920-00-997-4712	F3C	9	2840-01-073-3841	17	51
4920-00-997-4713	E53	2	2840-01-085-4107	19	
4710-00-998-6036	BULK		2840-01-089-4251	19	51
5330-01-005-0508	30	9	2945-01-109-7178	65	1
2840-01-005-4659	4	13	2945-01-109-7178	67	13
2840-01-005-4699	6	1			
2840-01-005-4699	68				
2915-01-005-9196	34	19			

FSCM	PART NUMBER	FIGURE NO.	ITEM NO.	FSCM	PART NUMBER	FIGURE NO.	ITEM NO.
81343	AMS3238	BULK		88044	AN101117	3	6
81343	AMS5532	BULK		88044	AN101117	68	
81343	AMS5765	BULK		88044	AN101120	4	5
81343	AMS5765	BULK		88044	AN101120	33	5
88044	AN100041	27	13	88044	AN101122	4	2
88044	AN100043	27	36	88044	AN101130	14	16
88044	AN101115	3	14	88044	AN101914	14	25

FSCM	PART NUMBER	FIGURE NO.	ITEM NO.
88044	AN101916	14	19
88044	AN101916	15	2
88044	AN102810	16	29
88044	AN102910	67	7
88044	AN103706	3	16
88044	AN103706	27	32
88044	AN103706	56	23
88044	AN103707	52	3
88044	AN103707	53	18
88044	AN103707	55	8
88044	AN103707	56	16
88044	AN103710	3	22
88044	AN103710	10	2
88044	AN103711	55	15
88044	AN103712	9	26
88044	AN103721	67	2
88044	AN103722	33	17
88044	AN103722	34	27
88044	AN103809	59	4
88044	AN103811	27	4
88044	AN103813	8	2
88044	AN103813	63	20
88044	AN103813	64	18
88044	AN103840	27	3
88044	AN104011	7	8
88044	AN104012	BULK	
88044	AN104016	26	5
88044	AN104026	10	9
88044	AN104146	26	3
88044	AN104706	30	51
88044	AN104708	29	1
88044	AN104728	29	33
88044	AN104906	18	22
88044	AN106906	50	1
88044	AN106406	52	34
88044	AN106408	30	20
88044	AN106506	25	10
88044	AN106508	30	3
88044	AN107406	24	27
88044	AN107406	29	29
88044	AN107406	59	16
88044	AN107520	30	47
88044	AN116916	57	15
88044	AN116916	58	13
88044	AN121501	37	18
88044	AN121501	38	15
88044	AN122683	32	24
88044	AN122684	7	36
88044	AN122691	43	55
88044	AN122691	44	61
88044	AN123619	20	25
88044	AN125439	20	28
88044	AN125439	21	25
88044	AN148556	29	58
88044	AN148658	59	3
88044	AN315-4R	37	168
88044	AN315-4R	38	166
88044	AN315-4R	41	40
88044	AN315C3R	24	6
88044	AN386-2-6A	3	7
88044	AN4H5A	27	102
88044	AN4H5A	59	3
88044	AN500AD10-22	35	21
88044	AN500AD10-22	36	14
88044	AN500AD5-5	15	12
88044	AN500AD5-8	31	5
88044	AN500AD6-32	48	31
81352	AN502-10-10	BULK	
88044	AN502-10-26	66	2
88044	AN502-10-6	12	3
88044	AN502-10-6	58	7
88044	AN502-10-8	11	8
88044	AN502-10-8	12	5
88044	AN502-10-8	14	6
88044	AN502-10-8	33	2
88044	AN502-10-8	52	12
88044	AN502-10-8	53	8
88044	AN502-10-8	55	3
88044	AN502-10-8	56	13
88044	AN502-10-8	57	3

FSCM	PART NUMBER	FIGURE NO.	ITEM NO.
88044	AN502-10-8	58	8
88044	AN502-10-8	63	2
88044	AN502-10-8	64	8
88044	AN503-416-8	37	59
88044	AN503-416-8	38	58
88044	AN503-8-10	33	21
88044	AN503-8-10	34	12
88044	AN507C836R5	19	26
88044	AN510C5R4	25	4
88044	AN565A1032H2	29	47
88044	AN565FC1032H10	45	2
88044	AN565FC1032H10	46	2
88044	AN6227-10	27	88
88044	AN742F2	BULK	
88044	AN777-4D	33	16
88044	AN814-12DL	BULK	
88044	AN818-2C	52	25
88044	AN818-2C	53	22
88044	AN901-4A	33	15
88044	AN924-4	34	6
88044	AN924-4	52	29
88044	AN929A3C	19	82
88044	AN932D2	7	27
88044	AN932D3	7	32
88044	AN960-10	67	3
88044	AN960-10L	9	27
88044	AN960-10L	10	3
88044	AN960-10L	13	16
88044	AN960-10L	14	20
88044	AN960-10L	15	3
88044	AN960-10L	33	18
88044	AN960-10L	34	28
88044	AN960-416	3	39
88044	AN960-416	29	9
88044	AN960-416L	3	13
88044	AN960-416L	4	6
88044	AN960-416L	8	4
88044	AN960-416L	10	11
88044	AN960-416L	13	12
88044	AN960-416L	14	17
88044	AN960-416L	27	5
88044	AN960-416L	27	99
88044	AN960-416L	59	6
88044	AN960-416L	67	8
88044	AN960-516	10	17
88044	AN960-516L	29	44
88044	AN960-516L	33	33
88044	AN960-516L	34	30
88044	AN960-616	BULK	
88044	AN960-616L	7	9
88044	AN960-616I	10	10
88044	AN960-616L	18	23
88044	AN960-616L	27	15
88044	AN960C10L	3	17
88044	AN960C10L	35	31
88044	AN960C10L	36	28
88044	AN960C10L	37	98
88044	AN960C10L	38	97
88044	AN960C10L	41	52
88044	AN960C416	36	31
88044	AN960C416L	35	14
88044	AN960C416L	35	53
88044	AN960C416L	36	23
88044	AN960C416L	37	169
88044	AN960C416L	38	167
88044	AN960C416L	39	113
88044	AN960C416L	41	41
88044	AN960C516L	30	48
88044	AN960C516L	47	22
88044	AN960C516L	48	33
88044	AN960C6	BULK	
88044	AN960C616L	BULK	
88044	AN960C716	52	30
88044	AN960C716	53	19
88044	AN960C8	33	22
88044	AN960C8	34	13
88044	AN960C8	37	141
88044	AN960C8	44	33
88044	AN960C8L	48	39

FSCM	PART NUMBER	FIGURE NO.	ITEM NO.	FSCM	PART NUMBER	FIGURE NO.	ITEM NO.
88044	AN960PD8	62	15	91547	LTCT11271	E3	7
88044	AN975-3	3	5	91547	LTCT11272	E3	7
05939	AR100260	KITS		91547	LTCT11275	E3	8
81346	ASTMA312	BULK		91547	LTCT11276	E3	9
81343	AS100027	BULK		91547	LTCT11277	E3	9
81343	AS123761	37	78	91547	LTCT11278	E4	2
81343	AS123761	43	28	91547	LTCT11295	E36	2
71840	A107376	KITS		91547	LTCT11296	E4	7
71840	A107376	16		91547	LTCT11315	E4	7
98869	BH4352	E47	4	91547	LTCT11320	E47	1
98869	BH743L40	E16	10	91547	LTCT11321	E1	10
98869	BH743R40	E16	6	91547	LTCT11322	E36	3
71840	B102140-309	KITS		95147	LTCT11323	E36	4
71840	B102142-90	KITS		91547	LTCT11327	E36	5
71840	B102346-2	KITS		91547	LTCT11328	E4	10
71840	B102346-3	KITS		91547	LTCT11336	E4	10
92798	CAP2171	BULK		91547	LTCT11338	E26	6
81996	EAB700-2	52	28	91547	LTCT11356	E40	1
81996	EAB700-2	53	20	91547	LTCT11358	E28	2
81996	EAB700-3	57	11	91547	LTCT11365	E24	1
81996	EAB700-3	58	10	91547	LTCT11366	E41	6
81996	EAB700-4	14	10	91547		E28	3
81996	EAB700-4	33	4	91547	LTCT115	E33	7
81996	EAB700-4	34	25	91547	LTCT1218	E14	8
81996	EAB700-4	50	20	91547	LTCT123	E17	3
81996	EAB700-4	52	15	91547	LTCT1255	E48	1
81996	EAB700-4	53	11	91547	LTCT13001	E14	2
81996	EAB700-4	57	5	91547	LTCT13003	E41	5
81996	EAB700-4	58	12	91547	LTCT13007	E6	7
81996	EAB700-5	11	14	91547	LTCT130070	E11	6
81996	EAB700-5	12	7	91547	LTCT13175	E43	3
81996	EAB700-5	14	5	91547	LTCT13205	E1	7
81996	EAB700-5	33	3	91547	LTCT13206	E1	8
81996	EAB700-5	52	13	91547	LTCT13345	E36	7
81996	EAB700-5	53	9	91547	LTCT13356	E36	7
81996	EAB700-5	55	2	91547	LTCT13367	E36	8
81996	EAB700-5	57	8	91547	LTCT13430	E43	2
81996	EAB700-5	58	11	91547	LTCT13606	E36	9
81996	EAB700-5	63	1	91547	LTCT13676	E5	7
81996	EAB700-5	64	10	91547	LTCT13688	E4	9
81996	EAB700-6	52	22	91547	LTCT13726	E31	1
81996	EAB700-7	11	10	91547	LTCT13846	E28	8
81996	EAB700-7	12	4	91547	LTCT142	E19	2
81996	EAB700-7	50	8	91547	LTCT14240	E2	1
81996	EAB700-7	56	12	91547	LTCT1429	E47	3
81996	EAB700-7	63	4	91547	LTCT1430	E13	6
91547	EC22	BULK		91547	LTCT14503	E56	9
81349	F02A250V1A	BULK		91547	LTCT14514	E56	10
81348	GGGT70	E30	12	91547	LTCT1452	E33	2
26232	HJB1	E30	13	91547	LTCT153	E20	1
01556	KR5A15	7	34	91547	LTCT1643	E2	2
01556	KR5A15	9	57	91547	LTCT1644	E2	2
01556	KR5A15	37	220	91547	LTCT168	E21	3
01556	KR5A15	38	209	91547	LTCT179	E33	4
01556	KR5A15	47	35	91547	LTCT197	E23	2
01556	KR5A15	48	69	91547	LTCT2016	E33	6
91547	LTCT100	E56	5	91547	LTCT2018	E35	1
91547	LTCT10522-01	E11	1	91547	LTCT2020	E51	1
91547	LTCT107	E5	3	91547	LTCT2021	E17	4
91547	LTCT108	E34	3	91547	LTCT2027	E20	6
91547	LTCT11006	E13	9	91547	LTCT2028	E21	1
91547	LTCT11023	E10	5	91547	LTCT2035	E4	3
91547	LTCT11024	E13	8	91547	LTCT2037	E4	3
91547	LTCT11060	E3	10	91547	LTCT2041	E7	3
91547	LTCT11067	E33	8	91547	LTCT2044	E29	3
91547	LTCT11072	E8	9	91547	LTCT2048	E33	5
91547	LTCT1109	E5	3	91547	LTCT2052	E39	5
91547	LTCT11102	E8	8	91547	LTCT2057	E38	4
91547	LTCT11106	E9	7	91547	LTCT2058	E38	4
91547	LTCT11112	E6	3	91547	LTCT2067	E28	4
91547	LTCT11114	E11	9	91547	LTCT2068	E35	7
91547	LTCT11175	E7	8	91547	LTCT207	E23	4
91547	LTCT11176	E8	12	91547	LTCT2073	E14	1
91547	LTCT11181	E8	6	91547	LTCT2075	E12	2
91547	LTCT11201	E4	5	91547	LTCT2079	E15	2
91547	LTCT11208	E4	6	91547	LTCT2080	E14	3
91547	LTCT11209	E26	7	91547	LTCT2083	E9	5
91547	LTCT11222	E8	7	91547	LTCT2086	E12	3
91547	LTCT11249	E1	6	91547	LTCT2096	E1	1
91547	LTCT11250	E1	6	91547	LTCT2099	E23	3

FSCM	PART NUMBER	FIGURE NO.	ITEM NO.	FSCM	PART NUMBER	FIGURE NO.	ITEM NO.
91547	LTCT2118	E22	7	91547	LTCT3981	F25	7
91547	LTCT2119	E22	7	91547	LTCT40	F37	4
91547	LTCT2120	E26	5	91547	LTCT4002	F5	3
91547	LTCT2121	E25	9	91547	LTCT4006-C2	F11	4
91547	LTCT2125	E51	16	91547	LTCT4006-C3	F11	4
91547	LTCT2129	E26	5	91547	LTCT4007	E30	10
91547	LTCT2133	E15	2	91547	LTCT4012	E11	5
91547	LTCT2142X	E14	5	91547	LTCT4013	F5	1
91547	LTCT2147-C1	E14	6	91547	LTCT4014	F23	1
91547	LTCT2149	E25	6	91547	LTCT4018	F12	5
91547	LTCT215	E5	3	91547	LTCT4019	F13	1
91547	LTCT2151	E42	1	91547	LTCT4020	E27	1
91547	LTCT2152	E42	1	91547	LTCT4028	F11	3
91547	LTCT2158-C1	E27	5	91547	LTCT4029	F11	3
91547	LTCT2159	E25	5	91547	LTCT403	F38	2
91547	LTCT216	E24	3	91547	LTCT404	F38	3
91547	LTCT2161	E24	2	91547	LTCT4051	E42	2
91547	LTCT222	E15	2	91547	LTCT406	E38	5
91547	LTCT231	E25	4	91547	LTCT407	F39	4
91547	LTCT236	E26	2	91547	LTCT4078	F25	3
91547	LTCT248	E26	3	91547	LTCT4081	F18	4
91547	LTCT251	E27	3	91547	LTCT4084	F53	1
91547	LTCT256	E27	4	91547	LTCT409	F37	3
91547	LTCT258	E29	1	91547	LTCT4130	F39	6
91547	LTCT264	E28	6	91547	LTCT413	F39	1
91547	LTCT270	E56	5	91547	LTCT4153	F24	4
91547	LTCT2712-C2	E11	3	91547	LTCT4155	F24	7
91547	LTCT2712-C3	E11	3	91547	LTCT4172	F55	1
91547	LTCT2712-12	E11	3	91547	LTCT4174	F43	9
91547	LTCT2712-13	E11	3	91547	LTCT4175	F24	5
91547	LTCT2712-16	E11	3	91547	LTCT4181	F5	4
91547	LTCT2712-27	E11	3	91547	LTCT4182	F24	6
91547	LTCT2712-28	E11	3	91547	LTCT4190	E5	3
91547	LTCT2712-35	E11	3	91547	LTCT421	E52	1
91547	LTCT2712-40	E11	3	91547	LTCT422	F52	3
91547	LTCT283	E29	4	91547	LTCT423	F39	2
91547	LTCT287	E29	5	91547	LTCT4402-C1	F51	2
91547	LTCT2958	E25	2	91547	LTCT4402-C2	E51	3
91547	LTCT2966	E29	7	91547	LTCT4405	E51	4
91547	LTCT297	E30	1	91547	LTCT4406	E51	5
91547	LTCT3038	E16	4	91547	LTCT4408	E51	6
91547	LTCT3040	E12	4	91547	LTCT4409	F51	17
91547	LTCT313	E52	2	91547	LTCT4450	E51	7
91547	LTCT320	E31	2	91547	LTCT4459	F16	9
91547	LTCT321	E32	1	91547	LTCT4533	E7	1
91547	LTCT322	E32	2	91547	LTCT4535	F28	9
91547	LTCT3486	E16	1	91547	LTCT4547	F22	7
91547	LTCT3492	E29	7	91547	LTCT4552	F22	6
91547	LTCT3493	E29	7	91547	LTCT4558	E22	2
91547	LTCT3494	E29	7	91547	LTCT456	E8	5
91547	LTCT3623	E11	10	91547	LTCT4560	F22	3
91547	LTCT3636	E29	7	91547	LTCT4564	F21	4
91547	LTCT3637	E29	7	91547	LTCT4568	F21	6
91547	LTCT3638	E29	9	91547	LTCT4571	E21	5
91547	LTCT3640	E29	7	91547	LTCT4576	F21	7
91547	LTCT3646	E29	8	91547	LTCT4602	F29	7
91547	LTCT3648	E56	6	91547	LTCT4650	F16	2
91547	LTCT3653	E6	4	91547	LTCT4670	F20	8
91547	LTCT3654	E29	2	91547	LTCT4675	E11	2
91547	LTCT3658	E29	7	91547	LTCT4676	F11	2
91547	LTCT3659	E29	7	91547	LTCT4680	F15	4
91547	LTCT3660	E29	7	91547	LTCT4692	F20	7
91547	LTCT3661	E29	7	91547	LTCT4698	F20	3
91547	LTCT3662	F29	7	91547	LTCT4713	E42	6
91547	LTCT3663	E29	7	91547	LTCT4719	F35	6
91547	LTCT3664	E29	7	91547	LTCT4726	F54	1
91547	LTCT3665	E14	4	91547	LTCT4750	F19	5
91547	LTCT3685	E30	9	91547	LTCT4757	F15	2
91547	LTCT3694	E17	5	91547	LTCT4800	E6	1
91547	LTCT3706	E10	3	91547	LTCT4807	F19	4
91547	LTCT3788	E2	7	91547	LTCT4809	F19	3
91547	LTCT3825	E2	3	91547	LTCT481	F42	4
91547	LTCT3833	E2	6	91547	LTCT4810	F56	4
91547	LTCT387	E33	1	91547	LTCT4816	F53	2
91547	LTCT3906	E27	7	91547	LTCT4817	F8	1
91547	LTCT3911	E44	4	91547	LTCT482	E42	7
91547	LTCT393	E34	1	91547	LTCT483	F42	5
91547	LTCT3938	E56	3	91547	LTCT4842	E26	1
91547	LTCT3955	E16	3	91547	LTCT4846	E15	5
91547	LTCT3963	E28	7	91547	LTCT4856	F13	7

FSCM	PART NUMBER	FIGURE NO.	ITEM NO.	FSCM	PART NUMBER	FIGURE NO.	ITEM NO.
91547	LTCT487	E5	3	91547	LTCT911	F13	5
91547	LTCT4875	F2	5	91547	LTCT912	E7	6
91547	LTCT4855	E43	6	91547	LTCT915	F15	2
91547	LTCT4900	F30	11	91547	LTCT916	F1	2
91547	LTCT4904	E9	1	91547	LTCT9260	F51	8
91547	LTCT4938	E8	2	91547	LTCT9261	F51	9
91547	LTCT4947	E29	6	91547	LTCT9262	F51	10
91547	LTCT496	F27	6	91547	LTCT9263	F51	11
91547	LTCT4981	E35	5	91547	LTCT9264	F51	13
91547	LTCT495	E27	2	91547	LTCT9266	F51	14
91547	LTCT4956	E3	2	91547	LTCT9267	F49	2
91547	LTCT501	E56	8	91547	LTCT9268	F49	3
91547	LTCT503	E43	5	91547	LTCT9269	F49	11
91547	LTCT505	E5	3	91547	LTCT9270	F49	8
91547	LTCT506	E43	7	91547	LTCT9271	F49	7
91547	LTCT509	E44	1	91547	LTCT9272	F49	9
91547	LTCT511	E56	7	91547	LTCT9273	F49	5
91547	LTCT519	E44	3	91547	LTCT9274	F49	10
91547	LTCT526	E3	3	91547	LTCT9275	F49	6
91547	LTCT55	E46	1	91547	LTCT9276	F49	4
91547	LTCT551	E44	5	91547	LTCT9277	F49	12
91547	LTCT556	E46	2	91547	LTCT9379	F49	13
91547	LTCT57	E46	4	91547	LTCT9396	F51	12
91547	LTCT58	E46	5	91547	LTCT962	F13	4
91547	LTCT590	E25	1	91547	LTCT9896	F3	4
91547	LTCT6000	E34	2	81349	MIL-I-24391	BULK	
91547	LTCT6073	E25	8	81349	MILP121	BULK	
91547	LTCT6104	E7	5	81349	MILP26514	BULK	
91547	LTCT6124	E29	2	81349	MILR27426T2CL1-3687	16	44
91547	LTCT6139	E6	6	81349	MILP5031	BULK	
91547	LTCT6165	E30	5	81349	MILS18729	BULK	
91547	LTCT6203	E1	9	81349	MILS18729	BULK	
91547	LTCT6253	F10	6	81349	MILS5626	BULK	
91547	LTCT6254	E10	6	81349	MILS6721	BULK	
91547	LTCT6256	E10	6	81349	MILT8606	BULK	
91547	LTCT6300	E10	6	81349	MILW5846	BULK	
91547	LTCT6304	E10	6	03663	MP1C1069	68	
91547	LTCT6465	E43	4	96906	MS123123	35	6
91547	LTCT6525	E5	6	96906	MS123123	36	6
91547	LTCT6615	E19	6	96906	MS123123	37	5
91547	LTCT6616	E52	4	96906	MS123123	38	2
91547	LTCT6641	E41	3	96906	MS124656	3	35
91547	LTCT6644	E19	3	96906	MS124661	27	87
91547	LTCT6645	E17	7	96906	MS124735	9	59
91547	LTCT6646	E17	7	96906	MS124736	7	29
91547	LTCT6722	E41	2	96906	MS124736	28	19
91547	LTCT6740	E24	8	96906	MS124736	65	17
91547	LTCT675	E39	7	96906	MS124776	3	9
91547	LTCT6756	F28	5	96906	MS124816	28	20
91547	LTCT6763	E39	3	96906	MS15795-310	68	
91547	LTCT6837	E50	1	96906	MS15795-804	37	148
91547	LTCT6905	E4	8	96906	MS15795-804	38	147
91547	LTCT691	F15	1	96906	MS15795-810	3	4
91547	LTCT6917	E1	5	96906	MS16555-602	39	90
91547	LTCT692	E26	4	96906	MS16555-628	47	32
91547	LTCT6940	E7	9	96906	MS16555-629	39	105
91547	LTCT696	E15	2	96906	MS16562-150	41	59
91547	LTCT6961	F6	8	96906	MS16562-152	37	150
91547	LTCT6962	E6	9	96906	MS16562-152	38	148
91547	LTCT6987	E5	2	96906	MS16562-152	41	47
91547	LTCT713	E16	8	96906	MS16562-152	45	11
91547	LTCT716	E48	4	96906	MS16562-152	46	11
91547	LTCT718	E14	7	96906	MS16562-152	49	5
91547	LTCT722	E29	1	96906	MS16562-154	37	63
91547	LTCT733	E18	1	96906	MS16562-154	38	62
91547	LTCT752	E15	3	96906	MS16562-154	41	49
91547	LTCT773	E56	2	96906	MS16562-223	9	21
91547	LTCT780	E9	2	96906	MS16624-1106	59	8
91547	LTCT791	E7	2	96906	MS16625-1062	65	2
91547	LTCT818	E48	2	96906	MS16625-1102	7	12
91547	LTCT843	E4	1	96906	MS16625-3068	7	15
91547	LTCT859	E11	7	96906	MS16625-3068	32	5
91547	LTCT862	E56	1	96906	MS16625-3181	32	8
91547	LTCT865	E48	3	96906	MS16625-3185	27	45
91547	LTCT87	F4	4	96906	MS16625-4037	49	2
91547	LTCT8702	E52		96906	MS16625-4077	37	188
91547	LTCT8704	E52		96906	MS16625-4077	38	185
91547	LTCT8705	E52		96906	MS16627-4137	35	45
91547	LTCT899	E15	6	96906	MS16633-4012	56	5
91547	LTCT9043-C1	E18	2	96906	MS16995-11	24	17

FSCM	PART NUMBER	FIGURE NO.	ITEM NO.	FSCM	PART NUMBER	FIGURE NO.	ITEM NO.
96906	MS16955-11	25	8	96906	MS24392C4	13	37
96906	MS171433	37	150	96906	MS24392C4	14	3
96906	MS171522	20	2	96906	MS24392C4	34	2
96906	MS171522	21	2	96906	MS24392C4	52	19
96906	MS172203	9	39	96906	MS24392C4	53	2
96906	MS172237	32	26	96906	MS24392C4	62	11
96906	MS172238	9	38	96906	MS24392C4	64	3
96906	MS172238	32	34	96906	MS24392C6	11	1
96906	MS172241	30	31				
96906	MS172272	9	6	96906	MS24392C6	50	11
96906	MS172322	9	5	96906	MS24392C6	63	8
96906	MS17826-3	14	21	96906	MS24392J6	12	8
96906	MS19060-17	37	27	96906	MS24394C4	11	4
96906	MS19060-17	39	24	96906	MS24394C4	33	6
96906	MS19060-18	54	2	96906	MS24394C4	53	3
96906	MS19060-23	62	12	96906	MS24394J4	36	4
96906	MS20427F3-4	24	5	96906	MS24396C4	37	9
96906	MS20500-428	57	2	96906	MS24396C4	38	6
96906	MS20613-3C3	18	18	96906	MS24399C13	13	29
96906	MS20613-3C4	22	11	96906	MS24399C3	14	6
96906	MS20995C32	BULK		96906	MS24400C4	11	6
96906	MS20995NC32	BULK		96906	MS24400C4	33	7
96906	MS21042-2	69		96906	MS24400C4	53	4
96906	MS21042-3	3	3	96906	MS24621-2	35	10
96906	MS21042-3	11	9	96906	MS24621-2	36	3
96906	MS21042-3	12	6	96906	MS24621-2	35	3
96906	MS21042-3	14	7	96906	MS24630-1	60	17
96906	MS21042-3	15	4	96906	MS24665-151	41	109
96906	MS21042-3	16	28	96906	MS24665-155	14	22
96906	MS21042-3	19	85	96906	MS24665-22	38	22
96906	MS21042-3	33	1	96906	MS24665-22	41	2
96906	MS21042-3	34	24	96906	MS24665-22	44	31
96906	MS21042-3	52	10	96906	MS24673-1	66	20
96906	MS21042-3	53	7	96906	MS24673-2	66	21
96906	MS21042-3	55	4	96906	MS24673-5	15	9
96906	MS21042-3	56	14	96906	MS24673-5	27	91
96906	MS21042-3	57	4	96906	MS24674-8	41	146
96906	MS21042-3	58	9	96906	MS24678-5	27	19
96906	MS21042-3	63	3	96906	MS24693C265	31	24
96906	MS21042-3	64	9	96906	MS25177-10	BULK	
96906	MS21042-4	3	2	96906	MS25178-22	BULK	
96906	MS21042-4	4	4	96906	MS28034-3	57	12
96906	MS21042-4	14	15	96906	MS28034-3	58	3
96906	MS21042-4	27	37	96906	MS28778-4	7	23
96906	MS21042-4	29	8	96906	MS28778-4	11	7
96906	MS21042-5	13	16	96906	MS29512-C2	29	53
96906	MS21042-5	33	32	96906	MS29512-C2	51	3
96906	MS21042-5	34	29	96906	MS29512-C3	37	51
96906	MS21042L3	13	15	96906	MS29512-C3	38	50
96906	MS21043-4	58	15	96906	MS29512-C4	14	4
96906	MS21044N04	57	16	96906	MS29512-C4	33	8
96906	MS21044N04	58	14	96906	MS29512-C4	34	5
96906	MS21044N6	27	14	96906	MS29512-C4	35	8
96906	MS21045L4	27	98	96906	MS29512-C4	36	4
96906	MS21045L6	18	24	96906	MS29512-C4	37	6
96906	MS21046C4	23	11	96906	MS29512-C4	38	3
96906	MS21046C4	60	10	96906	MS29512-C4	39	5
96906	MS21208F1-15	3	12	96906	MS29512-C4	52	18
96906	MS21208F1-15	7	35	96906	MS29512-C4	53	8
96906	MS21208F1-15	9	58	96906	MS29512-C6	37	3
96906	MS21208F1-15	13	3	96906	MS29512-C6	48	13
96906	MS21208F1-15	28	9	96906	MS29512-C6	50	12
96906	MS21208F4-15	3	10	96906	MS29512-10	KITS	
96906	MS21208F4-15	59	22	96906	MS29512-10	37	126
96906	MS21208F5-10	7	39	96906	MS29512-10	38	121
96906	MS21208F5-10	47	38	96906	MS29512-10	50	18
96906	MS21208F5-10	48	72	96906	MS29513-CC5	37	53
96906	MS21208F6-10	28	18	96906	MS29513-CC5	38	52
96906	MS21208F6-15	3	11	96906	MS29513-CC6	39	37
96906	MS21208F6-15	7	28	96906	MS29513-CC6	47	6
96906	MS21208F7-20	7	26	96906	MS29513-CC6	66	18
96906	MS21208F8-10	7	30	96906	MS29513-CC7	37	54
96906	MS21208F8-20	7	24	96906	MS29513-CC7	38	53
96906	MS21209C0815	41	183	96906	MS29513-CC7	43	21
96906	MS21209C1-15	47	37	96906	MS29513-CC7	44	25
96906	MS21209C1-15	49	71	96906	MS29513-CC7	47	17
96906	MS21318-1	62	35	96906	MS29513-CC7	48	28
96906	MS21318-15	29	55	96906	MS29513-CC8	35	46
96906	MS24391C4L	67	5	96906	MS29513-CC8	36	30
96906	MS2439204	11	4	96906	MS29513-CC8	37	64

FSCM	PART NUMBER	FIGURE NO.	ITEM NO.	FSCM	PART NUMBER	FIGURE NO.	ITEM NO.
96906	MS29513-008	38	63	96906	MS29513-027	KITS	
96906	MS29513-010	KITS		96906	MS29513-027	35	28
96906	MS29513-010	36	42	96906	MS29513-027	36	25
96906	MS29513-010	37	72	96906	MS29513-027	37	73
96906	MS29513-010	38	71	96906	MS29513-027	38	72
96906	MS29513-010	39	18	96906	MS29513-110	37	46
96906	MS29513-010	39	91	96906	MS29513-110	38	44
96906	MS29513-010	39	103	96906	MS29513-111	37	95
96906	MS29513-010	41	175	96906	MS29513-111	38	94
96906	MS29513-010	42	7	96906	MS29513-115	43	22
96906	MS29513-010	43	16	96906	MS29513-115	44	24
96906	MS29513-010	44	18	96906	MS29513-119	43	34
96906	MS29513-010	48	8	96906	MS29513-119	44	36
96906	MS29513-011	35	58	96906	MS29513-121	KITS	
96906	MS29513-011	36	47	96906	MS29513-126	37	86
96906	MS29513-011	37	135	96906	MS29513-126	38	85
96906	MS29513-011	38	133	96906	MS29513-127	37	87
96906	MS29513-011	39	75	96906	MS29513-127	38	86
96906	MS29513-011	41	80	96906	MS29513-128	39	55
96906	MS29513-011	48	65	96906	MS29513-133	39	59
96906	MS29513-012	KITS		96906	MS29513-223	15	21
96906	MS29513-012	37	69	96906	MS29561-008	27	73
96906	MS29513-012	38	68	96906	MS29561-008	32	17
96906	MS29513-012	39	76	96906	MS29561-008	68	
96906	MS29513-012	40	7	96906	MS29561-008	68	
96906	MS29513-012	41	79	96906	MS29561-009	30	22
96906	MS29513-012	42	16	96906	MS29561-010	KITS	
96906	MS29513-012	48	64	96906	MS29561-010	9	53
96906	MS29513-012	49	28	96906	MS29561-010	18	10
96906	MS29513-013	37	31	96906	MS29561-010	27	93
96906	MS29513-013	38	31	96906	MS29561-010	29	41
96906	MS29513-013	39	22	96906	MS29561-010	65	14
96906	MS29513-013	41	78	96906	MS29561-013	KITS	
96906	MS29513-013	43	26	96906	MS29561-013	29	6
96906	MS29513-013	44	29	96906	MS29561-013	65	4
96906	MS29513-013	47	24	96906	MS29561-013	68	
96906	MS29513-013	48	35	96906	MS29561-013	68	
96906	MS29513-013	49	12	96906	MS29561-014	KITS	
96906	MS29513-014	37	32	96906	MS29561-014	9	10
96906	MS29513-014	38	30	96906	MS29561-014	29	5
96906	MS29513-014	39	77	96906	MS29561-014	62	11
96906	MS29513-014	41	77	96906	MS29561-014	68	
96906	MS29513-014	43	49	96906	MS29561-015	29	23
96906	MS29513-014	44	55	96906	MS29561-015	62	5
96906	MS29513-014	49	63	96906	MS29561-015	68	
96906	MS29513-014	66	8	96906	MS29561-015	68	
96906	MS29513-015	37	33	96906	MS29561-020	7	14
96906	MS29513-015	38	29	96906	MS29561-024	27	40
96906	MS29513-015	39	74	96906	MS29561-025	27	25
96906	MS29513-015	49	19	96906	MS29561-113	KITS	
96906	MS29513-016	KITS		96906	MS29561-113	33	29
96906	MS29513-016	35	32	96906	MS29561-113	34	10
96906	MS29513-016	37	34	96906	MS29561-113	68	
96906	MS29513-016	38	28	96906	MS29561-114	26	7
96906	MS29513-016	51	18	96906	MS29561-114	67	10
96906	MS29513-016	66	5	96906	MS29561-114	68	
96906	MS29513-017	37	122	96906	MS29561-115	27	12
96906	MS29513-017	38	119	96906	MS29561-115	67	11
96906	MS29513-017	41	87	96906	MS29561-115	68	
96906	MS29513-017	66	17	96906	MS29561-122	26	9
96906	MS29513-018	35	49	96906	MS29561-122	27	11
96906	MS29513-018	37	187	96906	MS29561-122	68	
96906	MS29513-018	38	185	96906	MS29561-123	27	104
96906	MS29513-018	39	92	96906	MS29561-126	29	14
96906	MS29513-018	41	144	96906	MS29561-128	29	14
96906	MS29513-019	35	56	96906	MS29561-128	68	
96906	MS29513-019	36	48	96906	MS29561-131	26	11
96906	MS29513-019	37	215	96906	MS29561-131	68	
96906	MS29513-019	38	204	96906	MS29561-135	27	34
96906	MS29513-019	48	57	96906	MS29561-138	27	44
96906	MS29513-020	35	57	96906	MS29561-144	KITS	
96906	MS29513-020	36	53	96906	MS29561-144	8	8
96906	MS29513-020	37	100	96906	MS29561-144	68	
96906	MS29513-020	38	99	96906	MS29561-146	KITS	
96906	MS29513-021	37	174	96906	MS29561-146	65	15
96906	MS29513-021	38	172	96906	MS29561-222	30	39
96906	MS29513-024	BULK		96906	MS29561-230	KITS	
96906	MS29513-024	KITS		96906	MS29561-230	67	4
96906	MS29513-024	37	10	96906	MS29561-230	68	
96906	MS29513-024	38	13	96906	MS29561-235	7	5

FSCM	PART NUMBER	FIGURE NO.	ITEM NO.	FSCM	PART NUMBER	FIGURE NO.	ITEM NO.
96906	MS25561-237	7	10	96906	MS51923-168	39	84
96906	MS35190-215	BULK		96906	MS51923-168	41	28
96906	MS35265-84	39	111	96906	MS51923-169	41	169
96906	MS35266-59	52	21	96906	MS51923-169	45	8
96906	MS35266-59	52	27	96906	MS51923-169	46	8
96906	MS35266-59	56	10	96906	MS51923-169	48	49
96906	MS35266-59	64	7	96906	MS51923-425	41	157
96906	MS35266-61	37	17	96906	MS51923-425	43	19
96906	MS35266-61	39	14	96906	MS51923-425	44	21
96906	MS35266-61	52	33	96906	MS51923-426	39	37
96906	MS35266-68	13	20	96906	MS51959-60	39	21
96906	MS35266-68	55	10	96906	MS51959-61	39	67
96906	MS35266-68	56	20	96906	MS51959-64	37	39
96906	MS35266-71	13	19	96906	MS51959-64	38	36
96906	MS35275-213	61	6	96906	MS51960-63	19	39
96906	MS35275-214	37	147	96906	MS51960-63	24	3
96906	MS35275-214	38	146	96906	MS51960-63	30	19
96906	MS35275-215	60	3	96906	MS51967-2	39	112
96906	MS35275-226	35	40	96906	MS51990-105	6	29
96906	MS35275-226	47	9	96906	MS51991E2C6	BULK	
96906	MS35275-226	48	20	96906	MS51991E2C8	BULK	
96906	MS35275-227	41	149	96906	MS90078-10	BULK	
96906	MS35275-228	43	25	96906	MS90078-7	BULK	
96906	MS35275-228	44	28	96906	MS9015-02	29	52
96906	MS35275-228	48	5	96906	MS9015-04	7	22
96906	MS35275-236	47	21	96906	MS9021-006	37	83
96906	MS35275-241	41	69	96906	MS9021-006	38	82
96906	MS35275-241	48	38	96906	MS9021-006	48	17
96906	MS35275-242	39	28	96906	MS9021-008	35	47
96906	MS35275-242	44	43	96906	MS9021-008	36	38
96906	MS35275-243	16	1	96906	MS9021-010	38	136
96906	MS35275-243	17	24	96906	MS9021-011	38	139
96906	MS35275-243	41	7	96906	MS9021-014	15	19
96906	MS35275-243	43	7	96906	MS9021-015	36	41
96906	MS35275-243	44	10	96906	MS9021-016	36	29
96906	MS35275-243	47	27	96906	MS9021-018	BULK	
96906	MS35275-243	61	15	96906	MS9021-030	15	17
96906	MS35275-245	37	161A	96906	MS9021-034	39	6
96906	MS35275-245	38	159	96906	MS9024-03	33	9
96906	MS35275-245	39	88	96906	MS9024-03	34	26
96906	MS35275-262	41	121	96906	MS90376-10Y	BULK	
96906	MS35275-263	35	30	96906	MS9047-100	28	5
96906	MS35275-263	36	27	96906	MS9089-06	59	17
96906	MS35275-263	37	11	96906	MS9089-14	8	5
96906	MS35275-263	38	7	96906	MS9089-25	4	8
96906	MS35275-264	37	20	96906	MS9089-25	10	13
96906	MS35275-264	38	17	96906	MS9105-01	18	9
96906	MS35275-264	41	92	96906	MS9105-52	32	24
96906	MS35275-264	48	3	96906	MS9105-58	32	32
96906	MS35275-264	49	7	96906	MS9105-59	27	8
96906	MS35275-265	39	9	96906	MS9105-60	32	39
96906	MS35275-267	41	93	96906	MS9134-01	27	39
96906	MS35275-268	39	42	96906	MS9147-35	14	12
96906	MS35275-260	35	19	96906	MS9171-10	17	37
96906	MS35275-260	36	12	96906	MS9202-015	16	41
96906	MS35275-281	35	12	96906	MS9202-015	17	45
96906	MS35275-281	36	8	96906	MS9202-015	68	
96906	MS35275-281	37	74	96906	MS9202-015	68	
96906	MS35275-281	38	73	96906	MS9205-013	19	47
96906	MS35275-284	39	111	96906	MS9241-012	KITS	
96906	MS35275-287	34	18	96906	MS9241-012	8	9
96906	MS35275-287	35	13	96906	MS9241-012	32	15
96906	MS35275-287	36	22	96906	MS9241-012	68	
96906	MS35276-255	52	14	96906	MS9241-017	7	11
96906	MS35276-260	53	6	96906	MS9244-01	BULK	
96906	MS35276-260	55	1	96906	MS9245-03	39	93
96906	MS35276-260	57	10	96906	MS9314-03	19	83
96906	MS35276-260	63	12	96906	MS9314-04	19	81
96906	MS35276-261	52	9	96906	MS9356-11	21	3
96906	MS35276-263	53	24	96906	MS9371-07	17	56
96906	MS35276-261	35	43	96906	MS9371-07	68	
96906	MS35276-264	36	36	96906	MS9373-017	17	46
96906	MS35276-266	35	44	96906	MS9373-017	68	
96906	MS35276-266	36	35	96906	MS9388-045	30	6
96906	MS51923-167	35	33	96906	MS9388-141	30	4
96906	MS51923-167	41	152	96906	MS9390-57	10	4
96906	MS51923-167	43	44	96906	MS9404-02	8	2
96906	MS51923-167	44	49	96906	MS9404-02	51	2
96906	MS51923-167	47	2	96906	MS9404-03	27	94
96906	MS51923-167	49	12	96906	MS9404-04	11	12

FSCM	PART NUMBER	FIGURE NO.	ITEM NO.	FSCM	PART NUMBER	FIGURE NO.	ITEM NO.
96906	MS9404-04	27	96	80205	NAS618-10	BULK	
96906	MS9404-04	53	23	80205	NAS618-12	BULK	
96906	MS9404-04	63	22	80205	NAS618-2	BULK	
96906	MS9404-06	27	53	80205	NAS618-3	BULK	
96906	MS9486-03	9	31	80205	NAS618-4	BULK	
96906	MS9486-03	9	55	80205	NAS618-6	BULK	
96906	MS9486-24	16	40	30891	PC2501	F5	9
96906	MS9486-24	17	48	30891	PC2545	F5	11
96906	MS9486-47	29	37	30891	PC2546	F5	12
96906	MS9486-51	29	38	30891	PC2547-8	F5	13
96906	MS9490-08	29	1	92059	PC2555	F5	10
96906	MS9490-28	29	33	81348	PPPC843	BULK	
96906	MS9518-08	19	84	81348	PPPT60	BULK	
96906	MS9519-15	3	14	81348	PPPT63	BULK	
96906	MS9519-17	3	6	81348	PPPT66	BULK	
96906	MS9519-22	4	2	81348	CQA225-6	BULK	
96906	MS9530-09	3	38	81348	CQA250-1	BULK	
96906	MS9530-09	13	11	81348	CQA250-13	BULK	
96906	MS9530-09	56	24	81348	CQA250-4	BULK	
96906	MS9530-09	59	5	81348	CQS571	BULK	
96906	MS9530-09	64	19	51663	RA16219	62	8
96906	MS9530-13	59		51663	RA16223-2	62	6
96906	MS9530-18	8	3	51663	RA16224	62	7
96906	MS9532-14	26	5	51663	RA16226	62	3
96906	MS9565-05	19		51663	RA17196-1	62	24
96906	MS9584-06	29	29	51663	RA17196-2	62	31
96906	MS9584-19	29	22	51663	RA17197-1	62	14
96906	MS9705-08	23	9	51663	RA17359	62	27
96906	MS9915-11	3	6	51663	RA17361	62	13
96906	MS9924-25	10	13	51663	RA8183	62	34
96906	MS9924-32	10	13	51663	RB16227	62	4
96906	MS9944-27	10	9	51663	RB17354	62	18
81349	M83248-1-144	30	4	51663	RB17356	62	28
81349	M83248-1-149	13	9	51663	RB17357	62	26
81349	M83248-1-159	5	6	51663	RB17358	62	33
81349	M83248-1-159	6	6	51663	RB17362	62	21
81349	M83248-1-159	29	42	51663	RB17363-1	62	17
81349	M83248-1-232	13	8	51663	RB17363-2	62	17
81349	M83248-2-110	BULK		51663	RB17363-3	62	17
81349	M83248-2-112	BULK		51663	RB17363-4	62	17
81349	M83248/1-139	30	9	51663	RB17365	62	2
80205	NAS1351C4H14	19	21	83324	RCAEC28-312	F35	9
80205	NAS1594-010	BULK		83324	RCAEC39-484	E35	9
80205	NAS1594-119	BULK		83324	RCAEC56-6419	E40	7
80205	NAS1595-6	11	2	83324	RCAE38-453	F2	12
80205	NAS1595-6	12	9	83324	RCAE47-562	F40	5
80205	NAS1595-6	18	3	83324	RCAE56-687	F40	5
80205	NAS1595-6	19	7	55719	RC400	F35	8
80205	NAS1595-6	19	19	51663	RC17352	62	30
80205	NAS1595-6	63	10	51663	RC17353	62	23
80205	NAS1595-61595-6	KITS		51663	RC17355	62	10
80205	NAS1595-8	13	30	51663	RC17366	62	9
80205	NAS561C3-11	27	77	83324	RJ210SU16	BULK	
80205	NAS617-2	9	3	83324	RLRR28SU8	BULK	
80205	NAS617-3	27	95	83324	RLRR38SU7	BULK	
80205	NAS617-4	27	97	83324	RLRR38SU9	BULK	
80205	NAS617-4	57	13	83324	RLRR47SU8	BULK	
80205	NAS617-4	58	3	83324	RLRR56SU11	BULK	
80205	NAS617-4	63	9	83324	RLRR56SU8	BULK	
80205	NAS617-4	63	23	51663	RR17351	62	36
80205	NAS617-4	64	6	80756	RR181	62	16
80205	NAS617-4	67	6	51663	RS26005-58	62	25
80205	NAS617-5	9	51	51663	RS26005-54	62	32
80205	NAS617-5	63	19	51663	RS26038-3	62	20
80205	NAS617-5	64	15	51663	RS26113-C3CC4C	62	19
80205	NAS617-6	27	51	51663	RS26149-58	62	22
80205	NAS617-6	27	88	51663	RS26149-54	62	29
80205	NAS617-8	64	4	83324	RZA12112	BULK	
80205	NAS815-12A	BULK		83324	RZA12112PT	F40	6
80205	NAS816-11	BULK		76699	R1106W	F40	3
80205	NAS816-17	BULK		83324	R1108W	F2	11
80205	NAS816-23	BULK		83324	R1110W	F40	3
80205	NAS816-42	BULK		83324	R1111W	F2	11
80205	NAS816-72	BULK		83324	R1707C	E2	10
80205	NAS816-75	BULK		83324	R1707SX8	BULK	
80205	NAS816-82	BULK		83324	R1709SX9	BULK	
80205	NAS816-91	BULK		83324	R1711C	F2	10
80205	NAS816-98	BULK		83324	R1711SX9	BULK	
80205	NAS817-10	BULK		83324	R2060	E41	1
80205	NAS817-4	BULK		83324	R2060	F41	1

FSCM	PART NUMBER	FIGURE NO.	ITEM NO.	FSCM	PART NUMBER	FIGURE NO.	ITEM NO.
83324	R2C5D	E41	1	91547	STC3053-45	27	69
83324	R2100	E2	10	91547	STC3053-5C	16	37
50595	R23100-3	BULK		91547	STC3053-5C	68	
50595	R23100-4	BULK		91547	STC3057-2	6	41
70854	SFR2-5K	42	12	91547	STC3059-C67	31	17
70854	SFR2-5K	43	52	91547	STC3061-C8	16	61
70854	SFR2-5K	44	58	91547	STC3061-C8	17	69
95760	SIZE6	35	2	91547	STC3064-4	3	7
94592	SP754	65	6	91547	STC3064-6	10	
94592	SP755	65	5	11599	STC62454	F36	6
94592	SP756	65	3	11599	STC62467	F31	4
94592	SP799	65	7	11599	STC62469	E31	5
94592	SP801	65	9	11599	STC6247C	F31	6
94592	SP8C3	65	16	11599	STC62473	E31	7
94592	SP8C5	65	13	11599	STC6248C	F43	8
94592	SP8C6	65	12	11599	STC62493	E30	2
94592	SP8C9	65	10	11599	STC62494	F3	1
83324	SRW25D	E35	9	11599	STC62497	E45	4
83324	SRW25SA	E41	4	11599	STC6251C	E16	5
83324	SRW258	BULK		11599	STC6252E	F8	4
83324	SR25W4A	E40	4	11599	STC62527	F44	2
91547	STD3000B15	59	9	11599	STC62528	F30	6
91547	STD3000B15	68		11599	STC62532	E11	8
91547	STD3000B2C	59	10	11599	STC62533	F39	8
91547	STD3000B2C	68		11599	STC62536	F17	1
91547	STD3000E1	25	17	11599	STC62614	F6	10
91547	STD3000E4E	16	33	11599	STC63428	F5	8
91547	STD3001B121N	7	31	11599	STC63426	F6	2
91547	STD3001B121P	7	31	11599	STC63455	F10	2
91547	STD3001B15N	28	13	11599	STC63465	E30	4
91547	STD3001B15P	28	13	11599	STC6346E	F48	8
91547	STD3007B8N	28	2	11599	STC63469	F48	5
91547	STD3007B8P	28	2	11599	STC63493	F48	6
91547	STD3007B8R	28	2	11599	STC63511	F48	7
91547	STD3017E4	11	13	11599	STC63515	E8	3
91547	STD3017E4	13	34	11599	STC6355E	E8	11
91547	STD3017E4	34	3	11599	STC63557	F22	1
91547	STD3017E8	9	12	11599	STC6359P	F22	5
91547	STD3018K11	29	36	11599	STC63669	E31	3
91547	STD3018K11	32	23	11599	STC63671	F8	10
91547	STD3018K11	67	9	11599	STC63703	E46	3
91547	STD3018K11	68		11599	STC63704	E46	6
91547	STD3019B72	6	14	11599	STC63705	E46	7
91547	STD3019B72	68		11599	STC63743	E46	8
91547	STD3019C166	29	20	11599	STC63931	E45	1
91547	STD3019C163	68		11599	STC63973	E45	2
91547	STD3019C163	68		11599	STC6400E	F47	2
91547	STD3019C46	27	21	11599	STC64085	E45	3
91547	STD3019C52	27	20	11599	STC64369	F13	3
91547	STD3019C62	30	15	11599	STC64395	F44	6
91547	STD3019E54	5	16	11599	STC6450C	F44	7
91547	STD3019E54	6	20	11599	STC64501	F6	5
91547	STD3019E54	24	29	11599	STC64504	F44	9
91547	STD3019E54	68		11599	STC64505	E43	1
91547	STD3019E54	68		11599	STC64527	F17	6
91547	STD3019E58	25	16	11599	STC6453C	E43	10
91547	STD3019E63	16	35	11599	STC64535	F42	3
91547	STD3C19E63	68		11599	STC64541	E42	8
91547	STD3022-123	29	35	11599	STC64545	F42	9
91547	STD3022-123	68		11599	STC64546	F42	10
91547	STD3023K1	9	16	11599	STC6455C	F42	11
91547	STD3023K1	27	28	11599	STC64555	F9	3
91547	STD3023K2	18	32	11599	STC64557	E36	1
91547	STD3023K2	29	2	11599	STC64559	F9	4
91547	STD3024C25	24	40	11599	STC64564	E17	2
91547	STD3024C25	25	28	11599	STC6456E	F9	6
91547	STD3027C5	19	79	11599	STC64567	F20	9
91547	STD3027C6	18	29	11599	STC6456E	F33	3
91547	STD3033B1C1	30	41	11599	STC64570	E19	1
91547	STD3033B7	27	7	11599	STC64572	F20	4
91547	STD3033C15	33	28	11599	STC64576	E20	5
91547	STD3033C15	34	9	11599	STC64577	F20	2
91547	STD3036-31	27	61	11599	STC64578	E38	1
91547	STD3036-31	27	78	11599	STC64582	F38	6
91547	STD3053-11	32	22	11599	STC6459C	E38	7
91547	STD3053-11	68		11599	STC64779	E37	7
91547	STD3053-25	32	10	11599	STC64814	E37	8
91547	STD3053-25	68		11599	STC64825	E37	9
91547	STD3053-3	27	27	11599	STC6484C	E37	10
91547	STD3053-41	18	34	11599	STC64841	E37	11

FSCM	PART NUMBER	FIGURE NO.	ITEM NO.	FSCM	PART NUMBER	FIGURE NO.	ITEM NO.
11595	STD64843	E2	4	91547	1-030-185-C1	30	37
11595	STD64847	E37	1	91547	1-030-187-C3	30	14
11595	STD64861	E1	4	91547	1-030-191-C6	30	32
11595	STD64863	E1	4	91547	1-030-192-C4	29	15
11595	STD64864	E37	2	91547	1-030-192-C6	29	15
11595	STD64877	E37	5	91547	1-C30-193-C1	30	28
11595	STD64917	E3	5	91547	1-030-194-C2	30	28
11595	STD64934	E37	6	91547	1-030-195-C1	30	27
11595	STD64954	E32	3	91547	1-030-203-C1	30	44
11595	STD64967	E22	4	91547	1-030-211-C1	30	30
11595	STD64996	E10	4	91547	1-030-212-C1	30	7
11595	STD65043	E13	7	91547	1-030-212-C2	30	7
11595	STD65054	E35	2	91547	1-030-212-C3	30	7
11595	STD65073	E35	3	91547	1-030-212-C4	30	7
11595	STD65177	E30	3	91547	1-030-213-C1	29	18
11595	STD65178	E30	7	91547	1-030-214-C1	29	19
11595	STD65303	E13	10	91547	1-030-217-C1	30	13
11595	STD65321	E35	4	91547	1-030-225-C1	30	2
11595	STD65332	E21	2	91547	1-030-225-C3	30	2
11595	STD65561	E1	3	91547	1-030-234-C1	30	39
11595	STD65571	E3	6	91547	1-030-234-C2	30	38
11595	STD65582	E30	8	91547	1-030-240-C2	30	18
11595	STD65590	E7	6	91547	1-030-260-C1	29	6
11595	STD65607	E16	7	91547	1-030-330-C3	29	3
11595	STD65608	E13	11	91547	1-030-340-C4	30	42
11595	STD65622	E12	1	91547	1-030-350-C8	29	7
11595	STD65688	E12	6	91547	1-030-350-C8	30	1
11595	STD65693	E7	7	91547	1-030-390-C9	30	17
11595	STD65655	E12	7	91547	1-030-400-C1	29	17
11595	STD657C0	E12	9	91547	1-030-450-C2	30	53
11595	STD65846	E12	8	91547	1-030-460-C1	30	21
11595	STD670C4	E10	1	91547	1-C60-002-C1	29	43
11595	STD670C5	E2	9	91547	1-060-CC2-C1	68	
11595	STD67C82	E3	11	91547	1-060-003-C1	29	51
11595	STD67086	E2	8	91547	1-060-007-C1	31	18
11595	STD67087	E46	9	91547	1-060-010-C1	29	46
11595	STD67131	E43	11	91547	1-060-013-C1	7	25
87641	SWF13852-151C	E43	12	91547	1-060-015-C1	29	48
83086	S16	41	37	91547	1-060-C27-C6	29	54
94581	TS521054-5	18	15	91547	1-060-030-C1	29	50
94581	TS521054-5	19	3	91547	1-060-C37-C1	7	37
98568	T1C3-78	52	17	91547	1-060-040-C2	29	49
98568	T1C3-78	53	16	91547	1-060-080-C3	29	36
12757	T53L0T0095-1	16	47	91547	1-060-C82-C1	29	30
12757	T53L0T0095-3	16	47	91547	1-060-082-C2	29	30
72962	Z1200-048	65	8	91547	1-060-082-C3	29	30
72962	Z1200-054	18	12	91547	1-060-C82-C4	29	30
72962	Z1200-054	19	4	91547	1-060-082-C5	29	30
81348	OF499	BULK		91547	1-060-088-C3	31	16
81348	OF506	BULK		91547	1-060-090-C3	29	36
71468	025-0478-CCC	BULK		91547	1-060-091-C4	31	3
91547	1-00C-060-1C	2	2	91547	1-060-092-C3	31	4
				91547	1-060-093-C3	31	11
91547	1-CC0-080-12	2	1	91547	1-C60-095-C1	31	12
91547	1-000-080-13	2	1	91547	1-060-096-C2	31	13
91547	1-C10-C21-C2	BULK		91547	1-060-097-C1	31	14
91547	1-C10-C86-C1	16	63	91547	1-060-098-C2	7	41
91547	1-C10-C88-C1	16	64	91547	1-060-C99-C2	31	6
91547	1-C10-C92-C1	BULK		91547	1-060-100-C1	7	1
91547	1-020-015-C1	30	36	91547	1-060-100-C7	29	56
91547	1-020-C17-C1	KITS		91547	1-060-1C1-1C	7	40
91547	1-C20-C17-C1	29	25	91547	1-060-102-C3	7	40
91547	1-020-C17-C1	30	16	91547	1-060-106-C3	7	13
91547	1-020-154-C1	30	23	91547	1-060-106-C4	7	13
91547	1-020-155-C1	30	24	91547	1-060-107-C1	7	16
91547	1-C30-023-C2	30	10	91547	1-060-109-C3	7	4
91547	1-030-040-C8	29	26	91547	1-060-112-C3	7	7
91547	1-030-067-C1	30	8	91547	1-060-115-C1	7	38
91547	1-C30-C67-C2	30	8	91547	1-060-118-C1	7	3
91547	1-030-C69-C1	29	10	91547	1-060-119-C1	7	6
91547	1-C30-C73-C1	29	27	91547	1-060-119-C2	7	6
91547	1-C30-125-C1	30	43	91547	1-060-121-C3	29	28
91547	1-030-138-C4	29	13	91547	1-060-122-C1	8	8
91547	1-C30-139-C2	29	11	91547	1-060-122-C1	6	8
91547	1-030-141-C3	29	12	91547	1-060-124-C1	5	7
91547	1-C30-165-C2	30	11	91547	1-060-124-C1	6	7
91547	1-030-165-C3	30	11	91547	1-060-124-C1	68	
91547	1-030-172-C1	30	49	91547	1-060-124-C2	5	7
91547	1-C30-182-C3	30	45	91547	1-060-124-C2	6	7
91547	1-030-183-C3	30	46	91547	1-060-124-C2	68	

FSCM	PART NUMBER	FIGURE NO.	ITEM NO.	FSCM	PART NUMBER	FIGURE NO.	ITEM NO.
91547	1-060-124-03	5	7	91547	1-070-061-03	32	31
91547	1-060-124-03	6	7	91547	1-070-061-04	32	31
91547	1-060-124-03	68		91547	1-070-061-05	32	31
91547	1-060-124-04	5	7	91547	1-070-061-06	32	31
91547	1-060-124-04	6	7	91547	1-070-061-07	32	31
91547	1-060-124-05	5	7	91547	1-070-062-04	32	28
91547	1-060-124-05	6	7	91547	1-070-063-02	32	33
91547	1-060-124-06	5	7	91547	1-070-064-04	32	36
91547	1-060-124-06	6	7	91547	1-070-065-01	32	35
91547	1-060-124-07	5	7	91547	1-070-066-01	32	27
91547	1-060-124-07	6	7	91547	1-070-067-01	32	40
91547	1-060-124-08	5	7	91547	1-070-072-02	29	32
91547	1-060-124-08	6	7	91547	1-070-072-03	28	32
91547	1-060-124-09	5	7	91547	1-070-073-01	32	14
91547	1-060-124-09	6	7	91547	1-070-102-01	32	9
91547	1-060-124-10	5	7	91547	1-070-103-01	32	11
91547	1-060-124-10	6	7	91547	1-070-140-01	32	4
91547	1-060-125-01	5	11	91547	1-070-210-01	32	19
91547	1-060-125-01	6	11	91547	1-070-220-02	29	24
91547	1-060-125-01	68		91547	1-070-220-03	32	1
91547	1-060-126-01	5	12	91547	1-080-014-01	27	47
91547	1-060-126-01	6	12	91547	1-080-021-01	27	100
91547	1-060-127-03	5	14	91547	1-080-022-01	27	101
91547	1-060-127-04	6	17	91547	1-080-025-01	33	34
91547	1-060-128-01	32	18	91547	1-080-025-01	34	27
91547	1-060-135-02	31	21	91547	1-080-026-01	27	16
91547	1-060-138-01	31	20	91547	1-080-028-02	8	19
91547	1-060-139-01	6	16	91547	1-080-028-02	6	24
91547	1-060-141-01	6	15	91547	1-080-028-03	3	25
91547	1-060-141-02	6	15	91547	1-080-031-01	28	7
91547	1-060-141-03	6	15	91547	1-080-032-01	28	8
91547	1-060-141-04	6	15	91547	1-080-034-01	28	16
91547	1-060-141-05	6	15	91547	1-080-037-01	5	46
91547	1-060-141-06	6	15	91547	1-080-037-01	27	57
91547	1-060-141-07	6	15	91547	1-080-044-03	27	81
91547	1-060-141-08	6	15	91547	1-080-046-01	27	80
91547	1-060-141-09	6	15	91547	1-080-051-01	26	4
91547	1-060-141-10	6	15	91547	1-080-051-02	26	6
91547	1-060-142-01	31	23	91547	1-080-077-01	28	17
91547	1-060-143-01	7	39	91547	1-080-081-01	26	2
91547	1-060-151-01	31	25	91547	1-080-083-02	27	23
91547	1-060-152-02	29	39	91547	1-080-084-01	27	22
91547	1-060-153-01	29	40	91547	1-080-086-01	28	6
91547	1-060-154-01	7	33	91547	1-080-088-01	28	18
91547	1-060-162-01	6	18	91547	1-080-087-01	28	12
91547	1-060-162-02	6	18	91547	1-080-100-03	27	17
91547	1-060-162-03	6	18	91547	1-080-153-03	27	67
91547	1-060-162-04	6	18	91547	1-080-154-04	27	63
91547	1-060-162-05	6	18	91547	1-080-156-02	27	84
91547	1-060-162-06	6	18	91547	1-080-159-01	27	66
91547	1-060-190-01	5	9	91547	1-080-185-01	4	3
91547	1-060-190-01	6	9	91547	1-080-186-01	4	7
91547	1-060-220-03	7	1	91547	1-080-250-13	26	1
91547	1-060-220-03	29	56	91547	1-080-250-13	27	1
91547	1-060-250-03	31	2	91547	1-080-250-16	26	1
91547	1-060-260-07	31	7	91547	1-080-250-16	27	1
91547	1-060-270-05	29	45	91547	1-080-251-01	27	79
91547	1-060-270-05	31	1	91547	1-080-252-06	27	85
91547	1-060-300-03	31	22	91547	1-080-253-01	27	62
91547	1-060-310-01	31	19	91547	1-080-256-01	27	39
91547	1-060-330-03	31	8	91547	1-080-259-01	27	42
91547	1-060-340-01	31	10	91547	1-080-260-01	27	76
91547	1-070-002-01	32	12	91547	1-080-261-01	27	46
91547	1-070-002-01	68		91547	1-080-262-01	27	103
91547	1-070-006-01	32	3	91547	1-080-264-10	28	10
91547	1-070-007-01	32	2	91547	1-080-265-15	28	21
91547	1-070-011-01	32	6	91547	1-080-266-01	27	33
91547	1-070-016-02	32	13	91547	1-080-267-01	27	63
91547	1-070-021-01	32	16	91547	1-080-268-01	27	31
91547	1-070-023-01	32	25	91547	1-080-269-01	27	26
91547	1-070-056-01	32	21	91547	1-080-270-04	27	83
91547	1-070-057-01	32	20	91547	1-080-271-01	27	29
91547	1-070-058-01	32	21	91547	1-080-273-01	27	53
91547	1-070-059-01	32	38	91547	1-080-274-01	27	18
91547	1-070-059-02	32	38	91547	1-080-275-02	27	24
91547	1-070-059-03	32	38	91547	1-080-276-03	27	10
91547	1-070-059-04	32	38	91547	1-080-279-02	27	9
91547	1-070-059-05	32	38	91547	1-080-280-02	27	60
91547	1-070-061-01	32	31	91547	1-080-282-01	26	13
91547	1-070-061-02	32	31	91547	1-080-283-01N	28	4

FSCM	PART NUMBER	FIGURE NO.	ITEM NO.	FSCM	PART NUMBER	FIGURE NO.	ITEM NO.
91547	1-080-283-C1P	28	4	91547	1-100-213-13	6	5
91547	1-080-283-C1R	28	4	91547	1-100-213-14	5	5
91547	1-080-284-C1N	29	14	91547	1-100-213-14	6	5
91547	1-080-284-C1P	29	14	91547	1-100-213-15	5	5
91547	1-080-284-C1R	29	14	91547	1-100-213-15	6	5
91547	1-080-285-C1N	28	3	91547	1-100-213-16	5	5
91547	1-080-285-C1P	28	3	91547	1-100-213-16	6	5
91547	1-080-285-C1R	28	3	91547	1-100-213-17	5	5
91547	1-080-295-C1	27	58	91547	1-100-213-17	6	5
91547	1-080-296-C1	27	68	91547	1-100-213-18	5	5
91547	1-080-297-C1	27	72	91547	1-100-213-18	6	5
91547	1-080-298-C1	27	70	91547	1-100-213-19	5	5
91547	1-080-299-C1	27	71	91547	1-100-213-19	6	5
91547	1-080-310-C1	27	65	91547	1-100-213-20	5	5
91547	1-080-320-C1	27	49	91547	1-100-213-20	6	5
91547	1-080-330-C7	27	52	91547	1-100-213-21	5	5
91547	1-080-330-C7	29	1	91547	1-100-213-21	6	5
91547	1-080-330-C9	27	52	91547	1-100-214-C3	3	24
91547	1-080-330-C9	28	1	91547	1-100-214-C8	5	18
91547	1-080-340-C8	27	89	91547	1-100-220-C3	5	27
91547	1-080-340-C8	28	11	91547	1-100-227-C1	24	24
91547	1-080-350-C4	27	6	91547	1-100-227-C1	25	24
91547	1-080-370-C1	27	56	91547	1-100-227-C2	24	24
91547	1-080-430-C1	26	8	91547	1-100-227-C2	25	24
91547	1-080-460-C1	65	1	91547	1-100-227-C3	24	24
91547	1-080-460-C1	67	13	91547	1-100-227-C3	25	24
91547	1-100-034-C1	5	65	91547	1-100-227-C4	24	24
91547	1-100-034-C1	23	13	91547	1-100-227-C4	25	24
91547	1-100-063-C5	23	22	91547	1-100-227-C5	24	24
91547	1-100-069-C1	30	52	91547	1-100-227-C5	25	24
91547	1-100-078-C7	6	51	91547	1-100-227-C6	24	24
91547	1-100-080-C8	3	15	91547	1-100-227-C6	25	24
91547	1-100-080-C6	10	12	91547	1-100-227-C7	25	24
91547	1-100-080-C5	68		91547	1-100-227-C8	25	24
91547	1-100-090-C7	68		91547	1-100-227-C9	25	24
91547	1-100-118-C7	23	21	91547	1-100-227-10	25	24
91547	1-100-120-C3	5	20	91547	1-100-227-11	25	24
91547	1-100-131-C1	23	17	91547	1-100-227-12	25	24
91547	1-100-132-C6	23	4	91547	1-100-227-13	25	24
91547	1-100-133-C1	23	28	91547	1-100-227-14	25	24
91547	1-100-135-C3	23	2	91547	1-100-227-15	25	24
91547	1-100-140-C9	3	15	91547	1-100-227-16	25	24
91547	1-100-140-C9	10	12	91547	1-100-227-17	25	24
91547	1-100-144-C1	23	20	91547	1-100-227-18	25	24
91547	1-100-146-C4	17	39	91547	1-100-227-19	25	24
91547	1-100-147-C2	17	55	91547	1-100-227-20	25	24
91547	1-100-148-C1	6	50	91547	1-100-227-21	25	24
91547	1-100-148-C1	6	53	91547	1-100-227-22	25	24
91547	1-100-186-C1	3	8	91547	1-100-227-23	25	24
91547	1-100-186-C1	68		91547	1-100-227-24	25	24
91547	1-100-201-C1	5	26	91547	1-100-227-25	25	24
91547	1-100-202-C3	5	31	91547	1-100-227-26	25	24
91547	1-100-203-C3	5	36	91547	1-100-227-27	25	24
91547	1-100-204-C3	5	41	91547	1-100-227-28	25	24
91547	1-100-207-C4	5	51	91547	1-100-227-29	25	24
91547	1-100-212-C1	5	4	91547	1-100-227-30	25	24
91547	1-100-212-C1	6	4	91547	1-100-227-31	25	24
91547	1-100-213-C2	5	5	91547	1-100-227-32	25	24
91547	1-100-213-C2	6	5	91547	1-100-230-C7	5	32
91547	1-100-213-C3	5	5	91547	1-100-237-C1	5	23
91547	1-100-213-C3	6	5	91547	1-100-237-C2	5	23
91547	1-100-213-C4	5	5	91547	1-100-237-C3	5	23
91547	1-100-213-C4	6	5	91547	1-100-237-C4	5	23
91547	1-100-213-C5	5	5	91547	1-100-237-C5	5	23
91547	1-100-213-C5	6	5	91547	1-100-237-C6	5	23
91547	1-100-213-C6	5	5	91547	1-100-237-C7	5	23
91547	1-100-213-C6	6	5	91547	1-100-237-C8	5	23
91547	1-100-213-C7	5	5	91547	1-100-237-C9	5	23
91547	1-100-213-C7	6	5	91547	1-100-237-10	5	23
91547	1-100-213-C8	5	5	91547	1-100-237-11	5	23
91547	1-100-213-C8	6	5	91547	1-100-237-12	5	23
91547	1-100-213-C9	5	5	91547	1-100-237-13	5	23
91547	1-100-213-C9	6	5	91547	1-100-239-C4	5	30
91547	1-100-213-10	5	5	91547	1-100-240-19	5	37
91547	1-100-213-10	6	5	91547	1-100-242-C9	5	35
91547	1-100-213-11	5	5	91547	1-100-244-C8	5	43
91547	1-100-213-11	6	5	91547	1-100-251-C1	5	49
91547	1-100-213-12	5	5	91547	1-100-275-C2	5	25
91547	1-100-213-12	6	5	91547	1-100-276-C1	5	3
91547	1-100-213-13	5	5	91547	1-100-276-C1	6	3

FSCM	PART NUMBER	FIGURE NO.	ITEM NO.	FSCM	PART NUMBER	FIGURE NO.	ITEM NO.
91547	1-100-276-C1	68		91547	1-100-526-C1	3	37
91547	1-100-286-C8	6	41	91547	1-100-527-C1	3	36
91547	1-100-286-C9	6	40	91547	1-100-534-C1	6	37
91547	1-100-289-C1	17	62	91547	1-100-535-C1	6	39
91547	1-100-289-C2	17	62	91547	1-100-538-C1	3	8A
91547	1-100-289-C3	17	62	91547	1-100-560-C5	4	13
91547	1-100-292-C2	23	5	91547	1-100-560-C5	5	1
91547	1-100-293-C1	23	16	91547	1-100-560-C8	68	
91547	1-100-294-C3	23	31	91547	1-100-580-C1	5	2
91547	1-100-331-13	29	30	91547	1-100-620-C1	5	53
91547	1-100-331-14	29	30	91547	1-100-630-C8	4	1
91547	1-100-331-15	29	30	91547	1-100-630-C8	10	1
91547	1-100-331-16	29	30	91547	1-100-640-C6	4	1
91547	1-100-331-17	29	30	91547	1-100-640-C6	10	1
91547	1-100-334-C5	59	11	91547	1-100-720-40	4	13
91547	1-100-344-C1	5	52	91547	1-100-720-40	6	1
91547	1-100-344-C1	6	54	91547	1-100-720-40	68	
91547	1-100-346-C1	29	16	91547	1-100-720-45	4	13
91547	1-100-346-C1	68		91547	1-100-720-45	6	1
91547	1-100-346-C2	29	16	91547	1-100-720-45	68	
91547	1-100-361-C5	6	27	91547	1-100-800-C4	6	55
91547	1-100-361-C6	6	26	91547	1-100-880-12	23	1
91547	1-100-374-C1	3	34	91547	1-100-850-C3	23	3
91547	1-100-375-C1	6	35	91547	1-101-000-C1	3	18
91547	1-100-381-C1	5	21	91547	1-101-010-C1	3	19
91547	1-100-381-C2	5	22	91547	1-101-020-C1	3	20
91547	1-100-382-C1	5	28	91547	1-101-020-C1	68	
91547	1-100-382-C2	5	29	91547	1-101-030-C1	3	21
91547	1-100-383-C1	5	33	91547	1-101-030-C1	68	
91547	1-100-383-C2	5	34	91547	1-101-040-C1	3	23
91547	1-100-383-C4	6	43	91547	1-101-040-C1	68	
91547	1-100-383-C5	6	42	91547	1-101-080-C1	6	25
91547	1-100-384-C1	5	38	81547	1-101-080-C4	6	25
91547	1-100-384-C2	5	39	91547	1-101-090-C1	6	31
91547	1-100-384-C4	6	45	91547	1-101-110-C7	3	18
91547	1-100-384-C5	6	44	91547	1-101-110-C7	68	
91547	1-100-385-C1	5	43	91547	1-101-120-C3	3	19
91547	1-100-385-C2	5	44	91547	1-101-120-C3	68	
91547	1-100-385-C4	6	47	91547	1-101-210-C4	3	26
91547	1-100-385-C5	6	46	91547	1-101-250-C3	6	32
91547	1-100-405-C3	5	54	91547	1-101-260-C2	6	22
91547	1-100-406-C3	5	55	91547	1-101-260-C8	6	22
91547	1-100-407-C3	5	57	91547	1-101-360-C4	23	18
91547	1-100-408-C5	5	58	91547	1-101-370-C3	3	1
91547	1-100-409-C2	5	59	91547	1-110-011-C3	16	16
91547	1-100-411-C4	E51	15	91547	1-110-011-C4	17	17
91547	1-100-411-C4	5	67	91547	1-110-023-C2	17	2
91547	1-100-413-C8	5	13	91547	1-110-030-34	16	47
91547	1-100-413-12	6	13	91547	1-110-051-C1	16	9
91547	1-100-414-C4	5	48	91547	1-110-051-C2	17	3
91547	1-100-415-C1	5	50	91547	1-110-052-C2	17	5
91547	1-100-416-C7	5	46	91547	1-110-055-C4	16	49
91547	1-100-417-C5	5	45	91547	1-110-061-16	16	49
91547	1-100-423-C1	5	66	91547	1-110-072-C1	16	3
91547	1-100-423-C1	23	14	91547	1-110-072-C1	17	26
91547	1-100-427-C1	5	61	91547	1-110-073-C1	16	2
91547	1-100-428-18	5	62	91547	1-110-073-C1	17	25
91547	1-100-429-C3	5	63	91547	1-110-089-C1	16	13
91547	1-100-440-C7	5	47	91547	1-110-089-02	17	19
91547	1-100-450-C9	5	42	91547	1-110-093-C1	16	11
91547	1-100-454-C6	3	27	91547	1-110-093-C3	17	16
91547	1-100-454-C7	3	28	91547	1-110-100-C5	16	24
91547	1-100-454-C8	3	29	91547	1-110-100-C7	17	22
91547	1-100-454-C9	3	30	91547	1-110-101-C3	16	50
91547	1-100-454-10	3	31	91547	1-110-103-C2	16	26
91547	1-100-462-C1	3	32	91547	1-110-103-C4	17	7
91547	1-100-462-C2	3	32	91547	1-110-108-C1	16	27
91547	1-100-463-C1	3	33	91547	1-110-109-C1	16	25
91547	1-100-490-C8	5	60	91547	1-110-109-C3	17	6
91547	1-100-495-C3	6	30	91547	1-110-110-C4	16	19
91547	1-100-495-C7	6	30	91547	1-110-110-C6	17	10
91547	1-100-496-C3	6	33	91547	1-110-114-C1	16	4
91547	1-100-497-C1	6	34	91547	1-110-114-C8	17	27
91547	1-100-498-C1	6	36	91547	1-110-120-C2	16	15
91547	1-100-499-C3	6	38	91547	1-110-120-C3	17	21
91547	1-100-501-C1	6	48	91547	1-110-121-C1	16	9
91547	1-100-502-C2	6	49	91547	1-110-121-C2	17	4
91547	1-100-502-C2	6	52	91547	1-110-124-C1	16	14
91547	1-100-505-C2	6	28	91547	1-110-130-C3	16	23
91547	1-100-506-C2	6	23	91547	1-110-130-C4	17	20

FSCM	PART NUMBER	FIGURE NO.	ITEM NO.	FSCM	PART NUMBER	FIGURE NO.	ITEM NO.
91547	1-110-131-C4	17	52	91547	1-130-122-C2	20	21
91547	1-110-132-C1	17	63	91547	1-130-136-C1	20	22
91547	1-110-134-C1	17	38	91547	1-130-141-C1	20	9
91547	1-110-137-C1	23	6	91547	1-130-151-C1	20	24
91547	1-110-141-C2	23	15	91547	1-130-160-C8	16	56
91547	1-110-151-C1	16	52	91547	1-130-163-C8	18	1
91547	1-110-161-C3	23	7	91547	1-130-176-C1	20	6
91547	1-110-175-C2	17	51	91547	1-130-218-C1	20	13
91547	1-110-179-C3	17	51	91547	1-130-218-C2	21	5
91547	1-110-181-C6	17	54	91547	1-130-219-C1	20	16
91547	1-110-194-C4	17	60	91547	1-130-220-C2	20	29
91547	1-110-197-C1	KITS		91547	1-130-225-C1	21	4
91547	1-110-197-C1	16	5	91547	1-130-226-C3	19	25
91547	1-110-197-C1	17	28	91547	1-130-245-C1	19	48
91547	1-110-211-C1	17	41	91547	1-130-248-C2	21	11
91547	1-110-213-C1	17	49	91547	1-130-255-C1	21	13
91547	1-110-213-C2	17	50	91547	1-130-256-C1	21	8
91547	1-110-214-C1	17	11	91547	1-130-256-C2	21	9
91547	1-110-215-C1	17	15	91547	1-130-257-C1	21	7
91547	1-110-216-C1	17	23	91547	1-130-258-C2	21	15
91547	1-110-217-C1	64	5	91547	1-130-258-C4	21	21
91547	1-110-218-C1	17	13	91547	1-130-259-C2	21	14
91547	1-110-219-C1	17	12	91547	1-130-260-C2	18	35
91547	1-110-230-C1	16	6	91547	1-130-260-C3	20	1
91547	1-110-230-C2	16	7	91547	1-130-261-C1	21	19
91547	1-110-230-C9	17		91547	1-130-262-C2	21	19
91547	1-110-230-19	17	1	91547	1-130-264-C1	21	16
91547	1-110-250-C1	16	12	91547	1-130-265-C1	21	17
91547	1-110-250-C2	17	18	91547	1-130-266-C1	21	13
91547	1-110-301-C2	16	17	91547	1-130-268-C1	19	78
91547	1-110-301-C3	17	8	91547	1-130-380-C1	20	24
91547	1-110-303-C2	16	20	91547	1-130-580-C2	20	8
91547	1-110-304-C1	16	21	91547	1-130-590-C2	20	5
91547	1-110-305-C2	16	22	91547	1-130-600-C3	20	12
91547	1-110-309-C1	16	18	91547	1-130-610-C5	21	22
91547	1-110-309-C2	17	9	91547	1-130-620-C5	19	80
91547	1-110-310-C7	16	38	91547	1-130-620-C5	21	1
91547	1-110-313-C5	16	39	91547	1-130-630-C8	19	1
91547	1-110-314-C6	16	36	91547	1-130-710-C1	21	26
91547	1-110-315-C4	16	32	91547	1-130-720-C2	19	24
91547	1-110-316-C3	16	51	91547	1-130-730-C2	19	23
91547	1-110-321-C1	16	34	91547	1-130-780-C1	21	6
91547	1-110-321-C2	16	46	91547	1-130-790-C1	21	12
91547	1-110-334-C5	16	53	91547	1-130-900-C1	21	20
91547	1-110-375-C1	17	35	91547	1-140-009-C2	24	25
91547	1-110-420-C2	16	10	91547	1-140-009-C2	25	26
91547	1-110-440-C2	16	45	91547	1-140-011-C1	24	42
91547	1-110-500-C3	17	29	91547	1-140-011-C1	25	29
91547	1-110-520-19	17	30	91547	1-140-016-C1	24	41
91547	1-110-590-C2	17	47	91547	1-140-023-C6	19	41
91547	1-110-600-C5	17	57	91547	1-140-025-C5	25	11
91547	1-110-610-C1	17	14	91547	1-140-029-C2	22	7
91547	1-120-000-14	23	25	91547	1-140-030-11	16	58
91547	1-120-026-C3	23	28	91547	1-140-050-11	24	38
91547	1-120-027-C2	23	29	91547	1-140-056-C7	22	9
91547	1-120-028-C1	23	27	91547	1-140-059-C1	16	61
91547	1-120-029-C1	23	32	91547	1-140-061-C1	24	13
91547	1-120-029-C2	23	32	91547	1-140-061-C1	25	2
91547	1-120-029-C3	23	32	91547	1-140-062-C1	24	14
91547	1-120-031-C1	23	30	91547	1-140-062-C2	25	3
91547	1-120-032-C1	23	12	91547	1-140-067-14	17	65
91547	1-120-033-C1	23	11	91547	1-140-070-C1	24	26
91547	1-120-034-C1	23	10	91547	1-140-073-C2	24	39
91547	1-120-035-C2	23	23	91547	1-140-102-C2	19	72
91547	1-120-038-C2	23	24	91547	1-140-111-C1	24	33
91547	1-120-039-14	23	26	91547	1-140-111-C2	24	33
91547	1-130-001-C2	20	3	91547	1-140-111-C3	24	33
91547	1-130-003-C1	18	28	91547	1-140-111-C4	24	33
91547	1-130-015-C3	21	24	91547	1-140-111-C5	24	33
91547	1-130-020-C8	20	26	91547	1-140-111-C6	24	33
91547	1-130-091-C1	20	14	91547	1-140-111-C7	24	33
91547	1-130-094-C5	20	18	91547	1-140-111-C8	24	33
91547	1-130-096-C2	20	13	91547	1-140-111-C9	24	33
91547	1-130-096-C3	20	13	91547	1-140-111-10	24	33
91547	1-130-097-C3	20	15	91547	1-140-111-11	24	33
91547	1-130-098-C1	20	23	91547	1-140-111-12	24	33
91547	1-130-109-C2	20	30	91547	1-140-111-13	24	33
91547	1-130-112-C1	20	7	91547	1-140-111-14	24	33
91547	1-130-119-C2	20	20	91547	1-140-111-15	24	33
91547	1-130-121-C2	20	19	91547	1-140-111-16	24	33

FSCM	PART NUMBER	FIGURE NO.	ITEM NO.	FSCM	PART NUMBER	FIGURE NO.	ITEM NO.
91547	1-140-111-17	24	33	91547	1-140-285-C1	24	19
91547	1-140-130-C6	16	62	91547	1-140-285-C1	25	33
91547	1-140-142-C2	19	61	91547	1-140-290-C2	22	9
91547	1-140-144-C2	25	31	91547	1-140-420-C4	22	13
91547	1-140-157-C2	17	61	91547	1-140-470-C5	19	71
91547	1-140-157-C2	25	30	91547	1-140-520-14	25	1
91547	1-140-161-C1	25	7	91547	1-140-550-C7	25	32
91547	1-140-162-C2	25	22	91547	1-140-590-C7	25	27
91547	1-140-168-C3	19	60	91547	1-140-640-C3	17	68
91547	1-140-169-C3	19	68	91547	1-140-660-C2	25	19
91547	1-140-176-C2	19	73	91547	1-140-670-C2	25	9
91547	1-140-182-C1	17	70	91547	1-150-002-C1	18	6
91547	1-140-189-C2	25	13	91547	1-150-003-C2	18	4
91547	1-140-190-C3	25	12	91547	1-150-004-C3	18	5
91547	1-140-191-C2	25	6	91547	1-150-005-C2	18	27
91547	1-140-192-C2	25	5	91547	1-150-005-C2	19	38
91547	1-140-197-C1	19	75	91547	1-150-006-C1	18	2
91547	1-140-198-C1	19	76	91547	1-150-006-C1	19	70
91547	1-140-200-25	24	12	91547	1-150-007-C1	24	8
91547	1-140-202-C1	24	31	91547	1-150-007-C2	19	42
91547	1-140-205-C6	24	22	91547	1-150-030-C6	18	25
91547	1-140-208-C4	24	15	91547	1-150-031-C2	18	26
91547	1-140-209-C4	24	34	91547	1-150-040-C1	18	8
91547	1-140-210-18	24	18	91547	1-150-042-C2	18	19
91547	1-140-211-15	24	20	91547	1-150-044-C2	18	21
91547	1-140-211-16	24	21	91547	1-150-044-C2	20	4
91547	1-140-212-C9	24	36	91547	1-150-050-C5	18	23
91547	1-140-213-C8	24	16	91547	1-150-059-C1	17	72
91547	1-140-217-C1	16	57	91547	1-150-077-C3	58	5
91547	1-140-217-C1	17	64	91547	1-150-086-C1	19	44
91547	1-140-217-C2	16	57	91547	1-150-086-C1	24	10
91547	1-140-217-C2	17	64	91547	1-150-100-C1	18	17
91547	1-140-217-C3	16	57	91547	1-150-107-C3	19	18
91547	1-140-217-C3	17	64	91547	1-150-108-C1	19	17
91547	1-140-217-C4	16	57	91547	1-150-119-C1	19	10
91547	1-140-217-C4	17	64	91547	1-150-122-C1	19	11
91547	1-140-222-C2	22	3	91547	1-150-123-C2	19	12
91547	1-140-223-C1	22	5	91547	1-150-126-C1	56	18
91547	1-140-225-C1	22	2	91547	1-150-137-C1	19	36
91547	1-140-233-C1	KITS		91547	1-150-138-C1	19	37
91547	1-140-233-C2	16	59	91547	1-150-190-C1	24	9
91547	1-140-233-C2	17	66	91547	1-150-200-C1	24	3
91547	1-140-242-C1	16	54	91547	1-150-240-C3	19	40
91547	1-140-244-C1	22	6	91547	1-150-250-C2	19	33
91547	1-140-245-C1	16	55	91547	1-150-260-C2	19	8
91547	1-140-248-C3	22	12	91547	1-150-280-C3	19	16
91547	1-140-253-C1	22	13	91547	1-150-280-C5	19	14
91547	1-140-256-C1	24	32	91547	1-150-280-C6	19	13
91547	1-140-256-C2	24	32	91547	1-150-280-C7	19	15
91547	1-140-256-C3	24	32	91547	1-150-350-C1	18	30
91547	1-140-256-C4	24	32	91547	1-150-350-C1	24	1
91547	1-140-256-C5	24	32	91547	1-150-390-C1	19	34
91547	1-140-256-C6	24	32	91547	1-160-033-C1	59	13
91547	1-140-256-C7	24	32	91547	1-160-040-C3	33	20
91547	1-140-256-C8	24	32	91547	1-160-040-C3	34	14
91547	1-140-256-C9	24	32	91547	1-160-045-C1	50	7
91547	1-140-256-10	24	32	91547	1-160-045-C1	52	40
91547	1-140-256-11	24	32	91547	1-160-047-C2	59	7
91547	1-140-256-12	24	32	91547	1-160-054-C1	13	13
91547	1-140-256-13	24	32	91547	1-160-054-C1	57	6
91547	1-140-256-14	24	32	91547	1-160-074-C1	53	13
91547	1-140-256-15	24	32	91547	1-160-095-C1	51	8
91547	1-140-256-16	24	32	91547	1-160-095-C1	51	15
91547	1-140-256-17	24	32	91547	1-160-096-C1	51	9
91547	1-140-258-C4	19	74	91547	1-160-096-C1	51	16
91547	1-140-268-C1	25	21	91547	1-160-122-C1	51	11
91547	1-140-270-11	18	33	91547	1-160-123-C1	51	12
91547	1-140-270-11	22	1	91547	1-160-124-C1	50	6
91547	1-140-271-C1	25	18	91547	1-160-124-C3	52	38
91547	1-140-272-C4	25	36	91547	1-160-125-C1	50	4
91547	1-140-273-C3	25	34	91547	1-160-125-C1	52	36
91547	1-140-274-C2	25	35	91547	1-160-126-C1	50	5
91547	1-140-275-C1	19	77	91547	1-160-126-C1	52	37
91547	1-140-276-C1	19	70	91547	1-160-135-C1	19	87
91547	1-140-276-C2	19	70	91547	1-160-135-C1	55	6
91547	1-140-276-C3	19	70	91547	1-160-135-C1	63	13
91547	1-140-285-C1	5	64	91547	1-160-136-C1	19	86
91547	1-140-285-C1	19	64	91547	1-160-136-C1	53	10
91547	1-140-285-C1	23	19	91547	1-160-136-C1	55	5
91547	1-140-285-C1	24	7	91547	1-160-140-C9	50	27

FSCM	PART NUMBER	FIGURE NO.	ITEM NO.
91547	1-160-160-C9	51	10
91547	1-160-160-1C	50	21
91547	1-160-160-1C	51	1
91547	1-160-178-C1	50	3
91547	1-160-178-C1	52	39
91547	1-160-189-C2	53	23
91547	1-160-220-C2	50	2
91547	1-160-220-C3	52	35
91547	1-160-244-C1	10	21
91547	1-160-245-C1	10	20
91547	1-160-253-C1	10	14
91547	1-160-254-C1	10	7
91547	1-160-258-C2	55	11
91547	1-160-258-C2	56	21
91547	1-160-265-C1	10	18
91547	1-160-268-C2	13	5
91547	1-160-272-C1	10	5
91547	1-160-292-C1	29	57
91547	1-160-299-C2	59	18
91547	1-160-304-C1	59	19
91547	1-160-306-C1	10	22
91547	1-160-306-C1	11	15
91547	1-160-309-C1	4	11
91547	1-160-309-C1	33	12
91547	1-160-311-C1	33	11
91547	1-160-312-C1	57	9
91547	1-160-319-C1	33	14
91547	1-160-322-C1	52	26
91547	1-160-325-C1	KITS	
91547	1-160-325-C1	50	19
91547	1-160-341-C1	13	4
91547	1-160-342-C1	13	6
91547	1-160-343-C1	10	19
91547	1-160-362-C3	52	32
91547	1-160-403-C1	9	14
91547	1-160-404-C1	9	13
91547	1-160-409-C1	29	59
91547	1-160-409-C1	68	
91547	1-160-410-C5	9	49
91547	1-160-411-C1	8	9
91547	1-160-412-C1	9	22
91547	1-160-414-C2	9	19
91547	1-160-415-C1	9	17
91547	1-160-416-C2	9	18
91547	1-160-417-C1	9	47
91547	1-160-418-C1	9	48
91547	1-160-418-C2	9	24
91547	1-160-419-C2	9	40
91547	1-160-420-C1	9	4
91547	1-160-421-C1	9	44
91547	1-160-422-C2	9	36
91547	1-160-423-C2	9	37
91547	1-160-424-C1	9	11
91547	1-160-425-C1	9	7
91547	1-160-427-C1	9	9
91547	1-160-429-C1	9	32
91547	1-160-429-C1	9	56
91547	1-160-432-C2	9	50
91547	1-160-439-C1	9	43
91547	1-160-441-C1	9	33
91547	1-160-443-C1	9	3[illegible]
91547	1-160-444-C1	33	26
91547	1-160-444-C1	34	8
91547	1-160-446-C3	33	23
91547	1-160-446-C3	34	15
91547	1-160-448-C1	9	42
91547	1-160-450-C1	9	28
91547	1-160-451-C1	9	15
91547	1-160-452-C1	9	8
91547	1-160-454-C1	33	19
91547	1-160-454-C1	34	17
91547	1-160-457-C2	57	17
91547	1-160-464-C1	33	30
91547	1-160-464-C1	34	11
91547	1-160-468-C1	13	14
91547	1-160-468-C1	57	7
91547	1-160-468-C1	63	5
91547	1-160-469-C1	63	17
91547	1-160-469-C1	64	14
91547	1-160-480-C1	9	20
91547	1-160-482-C2	67	12
91547	1-160-490-C1	9	45
91547	1-160-500-C4	8	1
91547	1-160-500-C4	9	1
91547	1-160-509-C2	55	14
91547	1-160-509-C3	56	25
91547	1-160-510-C5	9	56
91547	1-160-512-C1	53	12
91547	1-160-525-C1	55	16
91547	1-160-560-C1	63	19
91547	1-160-560-C1	64	13
91547	1-160-566-C1	8	6
91547	1-160-576-C1	51	17
91547	1-160-582-C3	51	19
91547	1-160-583-C2	51	5
91547	1-160-584-C1	50	18
91547	1-160-585-C1	50	14
91547	1-160-586-C2	50	16
91547	1-160-589-C2	33	27
91547	1-160-589-C2	34	7
91547	1-160-591-C3	13	10
91547	1-160-591-C7	13	10
91547	1-160-592-C3	13	21
91547	1-160-593-C1	13	22
91547	1-160-596-C1	13	27
91547	1-160-596-C3	13	27
91547	1-160-597-C1	13	29
91547	1-160-598-C1	13	26
91547	1-160-605-C1	13	18
91547	1-160-607-C1	4	12
91547	1-160-607-C1	33	10
91547	1-160-607-C2	14	15
91547	1-160-617-C2	13	26
91547	1-160-619-C1	58	15
91547	1-160-622-C1	56	15
91547	1-160-623-C1	4	9
91547	1-160-624-C1	4	10
91547	1-160-625-C1	27	90
91547	1-160-626-C1	27	92
91547	1-160-629-C2	51	7
91547	1-160-679-C2	51	14
91547	1-160-635-C1	17	71
91547	1-160-660-C2	63	21
91547	1-160-760-C4	13	2
91547	1-160-820-C4	10	15
91547	1-160-870-C2	55	12
91547	1-160-870-C2	56	22
91547	1-160-880-C1	51	4
91547	1-160-890-C1	52	2
91547	1-160-850-C1	53	17
91547	1-160-970-C1	10	6
91547	1-170-050-C8	10	9
91547	1-170-050-C8	13	1
91547	1-170-050-C9	10	8
91547	1-170-050-C9	13	1
91547	1-170-120-C1	33	24
91547	1-170-120-C1	34	16
91547	1-170-130-C1	59	12
91547	1-170-140-C2	53	21
91547	1-170-210-C1	59	20
91547	1-170-220-C1	59	21
91547	1-170-230-C2	50	13
91547	1-170-410-C2	64	17
91547	1-170-420-C1	52	24
91547	1-170-430-C1	52	23
91547	1-170-490-C2	52	8
91547	1-170-500-C1	52	11
91547	1-170-710-C2	59	21
91547	1-180-004-C1	13	25
91547	1-180-017-C1	13	23
91547	1-180-049-C1	13	17
91547	1-180-101-C1	15	11
91547	1-180-103-C3	15	7
91547	1-180-104-C1	15	6
91547	1-180-105-C2	15	5
91547	1-180-106-C1	15	23
91547	1-180-107-C1	15	16
91547	1-180-108-C1	15	18
91547	1-180-109-C2	15	10
91547	1-180-111-C1	15	14

FSCM	PART NUMBER	FIGURE NO.	ITEM NO.
91547	1-180-114-C1	15	13
91547	1-180-115-C1	66	19
91547	1-180-115-C3	66	12
91547	1-180-121-C1	66	7
91547	1-180-122-C3	66	3
91547	1-180-125-C1	66	9
91547	1-180-126-C1	66	4
91547	1-180-127-C2	66	13
91547	1-180-128-C1	66	14
91547	1-180-131-C1	66	22
91547	1-180-134-C1	66	10
91547	1-180-135-C1	15	9
91547	1-180-150-C1	14	11
91547	1-180-150-C1	15	1
91547	1-180-160-C1	14	23
91547	1-180-170-C1	66	16
91547	1-180-180-C1	66	15
91547	1-180-190-C3	66	1
91547	1-180-200-C1	66	11
91547	1-180-210-C1	14	13
91547	1-190-000-C5	19	51
91547	1-190-004-C5	19	55
91547	1-190-007-C7	19	65
91547	1-190-008-C4	19	66
91547	1-190-009-C5	19	67
91547	1-190-010-C3	19	63
91547	1-190-013-C2	19	54
91547	1-190-014-C2	19	53
91547	1-190-015-C2	19	52
91547	1-190-016-C1	19	62
91547	1-190-019-C2	19	49
91547	1-190-019-C3	19	50
91547	1-190-021-C1	19	69
91547	1-190-021-C2	19	69
91547	1-190-021-C3	19	69
91547	1-190-021-C4	19	69
91547	1-190-027-C1	19	56
91547	1-190-028-C1	19	57
91547	1-190-029-C1	19	58
91547	1-190-031-C1	19	59
91547	1-190-037-C1	19	
91547	1-190-050-C6	19	51
91547	1-190-050-C7	19	51
91547	1-200-020-25	KITS	
91547	1-200-020-25	30	
91547	1-200-030-25	KITS	
91547	1-200-030-25	17	
91547	1-200-030-25	18	
91547	1-200-030-27	KITS	
91547	1-200-030-27	37	
91547	1-200-030-27	38	
91547	1-200-070-69	69	
91547	1-200-070-70	68	
91547	1-200-070-71	68	
91547	1-200-070-91	68	
91547	1-200-071-15	68	
91547	1-300-001	32	7
91547	1-300-002	27	48
91547	1-300-002	32	30
91547	1-300-003	9	35
91547	1-300-003	27	54
91547	1-300-003	27	75
91547	1-300-003	32	37
91547	1-300-004	9	23
91547	1-300-004	27	74
91547	1-300-005	27	55
91547	1-300-005	27	92
91547	1-300-006	27	30
91547	1-300-012	27	64
91547	1-300-015	5	10
91547	1-300-015	6	10
91547	1-300-015	24	23
91547	1-300-015	25	23
91547	1-300-016	29	31
91547	1-300-031	30	26
91547	1-300-032	30	29
91547	1-300-041	53	14
91547	1-300-046-C1	32	29
91547	1-300-047-C1	5	17
91547	1-300-047-C1	6	21

FSCM	PART NUMBER	FIGURE NO.	ITEM NO.
91547	1-300-047-C1	24	28
91547	1-300-054	63	15
91547	1-300-054	64	16
91547	1-300-073-C1	20	17
91547	1-300-077	6	2
91547	1-300-082	25	31
91547	1-300-085-C1	20	27
91547	1-300-085-C1	21	23
91547	1-300-086-C1	19	43
91547	1-300-116	31	15
91547	1-300-121	64	11
91547	1-300-123	31	9
91547	1-300-124	56	1
91547	1-300-134	64	1
91547	1-300-135	34	1
91547	1-300-136	14	2
91547	1-300-137	14	1
91547	1-300-138	12	2
91547	1-300-139	52	20
91547	1-300-141	66	24
91547	1-300-142	66	22
91547	1-300-143	66	25
91547	1-300-144	14	8
91547	1-300-151	19	22
91547	1-300-167-C1	66	6
91547	1-300-173	17	40
91547	1-300-174-C3	17	59
91547	1-300-176	5	56
91547	1-300-176	24	37
91547	1-300-177	58	4
91547	1-300-178	58	6
91547	1-300-182	59	14
91547	1-300-182-C1	68	
91547	1-300-191-C5	52	16
91547	1-300-191-C5	53	15
91547	1-300-192-C1	53	25
91547	1-300-192-C1	54	1
91547	1-300-194	55	1
91547	1-300-195-C1	55	7
91547	1-300-197	55	9
91547	1-300-201-C1	30	40
91547	1-300-202	11	11
91547	1-300-202	12	1
91547	1-300-203	33	13
91547	1-300-208-C1	50	9
91547	1-300-212	27	2
91547	1-300-212	62	1
91547	1-300-214	5	15
91547	1-300-214	6	19
91547	1-300-214	24	30
91547	1-300-215-C1	16	43
91547	1-300-215-C2	16	43
91547	1-300-216-C2	16	31
91547	1-300-221	67	1
91547	1-300-224	11	16
91547	1-300-225	63	16
91547	1-300-225	64	12
91547	1-300-227	63	7
91547	1-300-229	63	6
91547	1-300-231-C1	27	35
91547	1-300-232-C2	27	21A
91547	1-300-233	27	59
91547	1-300-234-C2	27	41
91547	1-300-235	9	25
91547	1-300-236	30	5
91547	1-300-237-C1	13	7
91547	1-300-239	18	11
91547	1-300-239	19	2
91547	1-300-242	57	14
91547	1-300-242	58	1
91547	1-300-243	27	86
91547	1-300-244	11	3
91547	1-300-244	52	1
91547	1-300-244	53	1
91547	1-300-245	55	13
91547	1-300-249-C1	16	42
91547	1-300-249-C1	17	44
91547	1-300-249-C1	68	
91547	1-300-259-C1	16	30
91547	1-300-266-C1	24	4

FSCM	PART NUMBER	FIGURE NO.	ITEM NO.	FSCM	PART NUMBER	FIGURE NO.	ITEM NO.
91547	1-300-267-C1	9	30	11599	103100A1	35	[illegible]
91547	1-300-268-C2	5	24	11599	10335	39	7
91547	1-300-268-C2	6	29	77820	11-4700-1	F49	1
91547	1-300-271-C1	56	11	77820	11-4737	F49	14
91547	1-300-315-C1	17	53	77820	11-4739	F49	15
91547	1-300-316-C1	25	14	77820	11-4740	F49	16
91547	1-300-326-C1	29	21	77820	11-6021	F49	17
91547	1-300-329	30	12	77820	11-6085	F49	18
91547	1-300-334-C2	30	5	77820	11-6086	F49	19
91547	1-300-335	30	33	77820	11-6105	F49	20
91547	1-300-336	25	15	77820	11-6277	F49	21
91547	1-300-337-C1	30	34	77820	11-6527	F49	22
91547	1-300-338-C1	30	35	77820	11-6530	F49	23
91547	1-300-339-C1	15	8	11599	12027-1	37	79
91547	1-300-341	14	18	11599	12027-1	38	78
91547	1-300-344-C1	15	15	11599	12027-2	37	79
91547	1-300-345	14	26	11599	12027-2	38	78
91547	1-300-347	19	30	11599	12027-3	37	79
91547	1-300-348	56	17	11599	12027-3	38	78
91547	1-300-354	15	22	71895	12128	51	6
91547	1-300-355	15	20	71895	12128	51	13
91547	1-300-358-C1	17	42	57163	1240	F15	7
91547	1-300-359-C1	17	58	11599	12558	41	129
91547	1-300-361	19	27	73370	126224	50	17
91547	1-300-362	19	28	11599	12738	37	173
91547	1-300-363	56	19	11599	12738	38	171
91547	1-300-366	19	32	11599	12738	39	11
91547	1-300-368-C1	33	35	71895	13682	54	9
91547	1-300-368-C1	34	21	11599	13809P002	39	109
91547	1-300-368-C1	68		99643	1478	61	18
91547	1-300-369	19	31	71895	15539	54	5
91547	1-300-371	19	29	71895	15542	54	3
91547	1-300-377	64	2	71895	15544	54	6
91547	1-300-398	52	5	71895	15726	54	8
91547	1-300-403	52	4	71895	17122	54	11
91547	1-300-405	52	31	71895	17123	54	4
91547	1-300-425	9	52	71895	17124	54	7
91547	1-300-462	16	60	71895	1893	54	10
91547	1-300-462	17	67	99643	19511	61	19
91547	1-300-462	19	45	99643	19758	61	14
91547	1-300-462	24	11	99643	19759	61	16
91547	1-300-462	24	35	99643	19763	61	17
91547	1-300-462	25	20	99643	19765	61	7
91547	1-300-487-C2	23	8	99643	19768	61	10
91547	1-300-582-C1	13	24	99643	19769	61	4
91547	1-300-584-C1	17	43	99643	19771	61	11
91547	1-300-584-C1	25	25	99643	19772	61	12
91547	1-300-585-C1	6	19	99643	19775	61	2
91547	1-300-588-C1	6	13	99643	19776	61	3
91547	1-300-647-C1	65	11	99643	19817	61	8
91547	1-300-648	65	18	99643	19818	61	9
77820	10-106078	KITS		99643	19865	61	5
77820	10-106078	56	3	91547	2-160-267-C1	13	32
77820	10-166519	KITS		91547	2-161-355-C1	14	24
77820	10-166711	KITS		91547	2-300-023	32	7
77820	10-166711	56	6	91547	2-300-123-C1	22	4
77820	10-166712	KITS		91547	2-300-186-C1	35	24
77820	10-166712	56	9	91547	2-300-186-C1	36	16
77820	10-166716	KITS		91547	2-300-186-C1	37	217
77820	10-166716	56	7	91547	2-300-186-C1	38	206
77820	10-166723-3	KITS		91547	2-300-322-C1	19	35
77820	10-166724-6	KITS		91547	2-300-361-C1	13	31
77820	10-166724-6	56	8	94581	20185-887	18	16
77820	10-319253	KITS		94581	20185-887	19	7
77820	10-319253	56	2	99643	20404	61	13
77820	10-70506-109	KITS		94581	214855-82	18	14
77820	10-70557-11	KITS		94581	214855-82	19	6
77820	10-70557-11	56	4	11599	23421	37	159
77820	10-88584-10	KITS		11599	23421	38	155
77820	10-88584-10	55		11599	23922	37	43
77820	10-88584-10	56		11599	23922	38	40
11599	100770A4	34	20	11599	23929	37	42
11599	100770A4	36	1	11599	23929	38	39
11599	10143	35	22	11599	24150	37	40
11599	10143	36	11	11599	24150	38	37
11599	102171	38	33	11599	24666	39	97
11599	102204	38	34	11599	24666	43	12
11599	102231	41	127	11599	24666	44	15
11599	102232	41	132	11599	25327	43	33
11599	103100A1	34	19	11599	25327	44	37

FSCM	PART NUMBER	FIGURE NO.	ITEM NO.	FSCM	PART NUMBER	FIGURE NO.	ITEM NO.
11595	25529	43	43	11599	28965-15-75	41	117
11595	25529	44	46	11599	28965-8-75	41	31
99167	25626545-01	60	5	11599	28970-6	37	67
11595	25634	43	13	11599	28970-6	38	66
11595	25634	44	16	11599	28985-4	39	4
99167	25716061	60	11	11599	28993-3	39	3
99167	25716068	60	4	11599	29266	37	82
11595	25745	41	134	11599	29266	38	81
11595	25785	43	41	11599	29269	37	81
11595	25785	44	47	11599	29269	38	80
99167	25816570	60	12	76381	360	BULK	
99167	25816571	60	13	95683	41C152	E40	2
99167	25816572	60	8	11599	41111	39	53
99167	25816578	60	7	11599	41116	39	52
99167	25820153	60	2	11599	41129	39	63
11595	25851	41	114	11599	41137	39	29
99167	25916207	60	9	11599	41152	39	26
99167	25926062	60	14	11599	41174	41	128
11595	26016	41	73	11599	41150SC	39	91
11595	26021	41	99	11599	41202	41	76
11595	26024	39	94	11599	41232-22	39	58
11595	26024	41	93	11599	41232-22	41	125
99167	26326083	60	6	11599	41232-25	39	58
99167	26326084	60	16	11599	41232-25	41	125
99167	26330053	60	1	11599	41232-28	39	58
99167	26336135	60	15	11599	41232-28	41	125
92003	2671182	52	6	11599	41232-31	39	58
92003	2671183	52	7	11599	41232-31	41	125
11595	27547	43	23	11599	41232-34	39	58
11595	27547	44	38	11599	41232-34	41	125
99643	28040	59	1	11599	41234	41	163
99643	28040	61	1	11599	41237	41	109
11595	28876	KITS		11599	41238	49	4
11595	28876	37	70	11599	41239	41	110
11595	28876	38	69	11599	41766	39	46
11595	28901-14	39	114	11599	41813	39	107
11595	28901-17	35	2	11599	41821	39	48
11595	28904-10	37	218	11599	41822	39	54
11595	28904-10	38	208	11599	41823	39	56
11595	28904-3	35	25	11599	41915	41	135
11595	28904-3	36	17	11599	42679	41	137
11595	28904-3	37	219	11599	43285	41	167
11595	28904-3	38	207	11599	43443	42	6
11595	28904-5	37	221	11599	43444	42	5
11595	28904-5	38	210	11599	43445	42	9
11595	28904-5	47	36	11599	43446	42	7
11595	28904-5	48	70	11599	43529	42	4
11595	28912-1	35	34	11599	43574	38	45
11595	28912-1	47	3	11599	43583	37	76
11595	28912-1	48	13	11599	43583	38	75
11595	28914-2	41	23	11599	43607	37	38
11595	28914-5	39	13	11599	43607	38	35
11595	28914-5	41	104	11599	43609	41	179
11595	28914-5	43	4	11599	43611	E34	4
11595	28914-5	44	6	11599	43611	41	115
11595	28914-5	45	4	11599	43672	43	29
11595	28914-5	46	4	11599	43672	44	31A
11595	28914-6	37	157	11599	43725	37	52
11595	28914-6	38	154	11599	43725	38	51
11595	28914-7	47	13	11599	43755	37	84
11595	28914-7	48	32	11599	43755	38	83
11595	28916-1	36	20	11599	43825	37	48
11595	28916-1	39	108	11599	43825	38	47
11595	28916-28	39	106	11599	44036	39	8
11595	28952-2	35	5	11599	44750	43	5
11595	28953-3	35	4	11599	44750	44	8
11595	28958-10-1	41	181	11599	44751	43	6
11595	28958-10-2	41	181	11599	44751	44	9
11595	28958-10-3	41	181	11599	45102	41	112
11595	28958-5-1	47	40	11599	45471	41	5
11595	28958-5-1	48	68	11599	45545	43	7
11595	28958-5-2	47	40	11599	45545	44	5
11595	28958-5-2	48	68	11599	45546	43	27
11595	28958-5-3	47	40	11599	45546	44	30
11595	28958-5-3	48	68	11599	45547	43	38
11595	28962-14	35	41	11599	45547	44	41
11595	28962-14	36	33	11599	45548	43	5
11595	28963-6	37	96	11599	45548	44	7
11595	28963-6	38	95	11599	45548	44	39
11595	28965-10-75	41	72	11599	45550	43	23

FSCM	PART NUMBER	FIGURE NO.	ITEM NO.	FSCM	PART NUMBER	FIGURE NO.	ITEM NO.
11595	45550	44	26	11599	46589	35	59
11595	45554	41	30	11599	46782	37	156
11595	45605	49	20	11599	46782	37	156
11595	45610	49	3	11599	46782	38	152
11595	45765	37	113	11599	46782	38	153
11595	45765	38	112	11599	46791	39	43
11595	45766	37	112	11599	46791	41	122
11595	45766	38	111	11599	46791	49	8
11595	45769	37	107	11599	46803	37	118
11595	45769	39	106	11599	46803	39	116
11595	46216	41	166	11599	46822	35	20
11595	46221	41	84	11599	46822	36	13
11595	46238	41	96	11599	46855	49	21
11595	46252	37	180	11599	46901	37	104
11599	46252	38	178	11599	46901	38	103
11595	46255	37	179	11599	47013	45	9
11595	46255	38	177	11599	47013	46	9
11595	46256	37	176	11599	47182	43	9
11595	46256	38	174	11599	47182	44	12
11595	46257	37	181	11599	47223	35	46
11595	46257	38	179	11599	47465	37	106
11599	46257	47	29	11599	47465	38	105
11595	46268	37	190	11599	47456	37	108
11595	46268	38	188	11599	47456	38	107
11595	46270	37	65	11599	47516	37	137
11595	46270	38	64	11599	47516	38	135
11599	46271	37	68	11599	47685	37	35
11595	46271	38	67				
11595	46283	37	182	11599	47687	37	37
11595	46283	38	160	11599	47687	38	32
11595	46284	37	175	11599	47776	43	11
11595	46284	38	173	11599	47776	44	14
11595	46286	37	61	11599	47791	41	182
11595	46286	38	60	11599	47830	43	16
11595	46296	37	132A	11599	47830	44	17
11595	46296	38	131	11599	48261	45	34
11595	46299	37	126	11599	48529	46	14
11595	46299	39	123	11599	48530	49	27
11595	46301	37	125	11599	48544	41	161
11595	46301	38	122	11599	48662	37	71
11595	46302	41	94	11599	48662	38	70
11595	46322	37	136	11599	48744	41	139
11595	46322	38	134	11599	48776	35	36
11595	46324	37	138	11599	48776	47	5
11595	46324	37	139	11599	48776	48	15
11595	46324	38	137	11599	48779	41	30
11595	46324	38	138	11599	48808	39	16
11595	46325	37	140	11599	48904	37	88
11595	46325	38	140	11599	48904	38	87
11595	46331	49	10	11599	48919	35	29
11599	46333	37	170	77445	490168	18	31
11599	46333	38	168	11599	49040	41	16
11595	46364	37	202	11599	49155	49	17
11595	46364	38	200	11599	49157	45	18
11599	46367	37	155	11599	49163	45	25
11595	46367	38	151	11599	49482	42	9
11595	46383	37	208	80201	500125	39	47
11595	46383	40	4	79136	5107-46N	35	57
11595	46385	41	54	79136	5107-46N	41	124
11595	46386	37	56	79136	5108-59N	39	49
11595	46386	38	55	81996	522CEC0C0-3	F5	5
11595	46389	41	100	81996	534CAC1-CC3	35	15
11595	46393	41	53	81996	534CA01-CC3	36	7
11595	46393	41	133	73471	539798	PLLK	
11595	46393	43	15	97424	5465097C5	57	1
11595	46396	41	55	39058	599-120-3	F14	9
11599	46398	49	31	09058	599-140-3	F15	6
11595	46403	37	200	66640	6085C14	19	13
11595	46403	38	198	66640	6085C14	19	6
11595	46414	45	10	00624	666203-15	50	10
11595	46414	46	10	10001	684C83	41	51
11595	46416	41	85	11599	70009	37	127
11595	46459	35	27	11599	70009	38	124
11595	46459	36	19	11599	70050	41	44
11595	46465	37	209	11599	70243	37	97
11595	46465	40	5	11599	70243	38	96
11595	46474	37	160	11599	70450	37	146
11599	46474	38	157	11599	70450	38	145
11595	46478	35	7	11599	70751	37	19
11595	46478	36	5	11599	70751	38	16

FSCM	PART NUMBER	FIGURE NO.	ITEM NO.	FSCM	PART NUMBER	FIGURE NO.	ITEM NO.
11595	70546	37	21	11599	74834	46	14
11595	70546	39	18	11599	74836	43	30
11595	70570	37	30	11599	74837	41	37
11595	70570	38	27	11599	74838	41	34
11595	71262	45	5	11599	74838	44	7
11595	71262	46	5	11599	74839	41	36
11595	71264	43	54	11599	74840	41	67
11595	71353	43	48	11599	74841	41	50
11595	71393	44	54	11599	74849	37	164
11595	71512	43	43	11599	74849	38	161
11595	71512	44	53	11599	74850	37	167
11595	71585	41	11	11599	74850	38	165
11595	71641	35	45	11599	74857	45	30
11595	71641	36	37	11599	74862	41	130
11595	71781	39	40	11599	74865	41	4
11595	71824	39	95	11599	74866	43	37
11595	71830	39	85	11599	74866	44	42
11595	71831	39	82	11599	74867	49	16
11595	71832	39	25	11599	74870	41	178
11595	71841	39	78	11599	74871	41	177
11595	71865	39	102	11599	74874	37	23
11595	71870	39	100	11599	74874	38	20
11595	72066	34	23	11599	74881	41	123
11595	72066	37	144	11599	74890	41	91
11595	72066	38	143	11599	74891	49	15
11595	72372	39	12	11599	74895	41	176
11595	72385	39	98	11599	74903	43	31
11595	72418-1	35	17	11599	74903	44	34
11595	72418-1	36	9	11599	74904	41	63
11595	72418-2	35	17	11599	74905	41	59
11595	72418-2	36	9	11599	74906	41	57
11595	72418-3	35	17	11599	74907	35	31
11595	72418-3	36	9	11599	74907	41	61
11595	72419-1	35	18	11599	74909	37	212
11595	72419-1	36	10	11599	74909	40	9
11599	72419-10	36	10	11599	74911	39	61
11595	72419-11	36	10	11599	74921	42	17
11595	72419-2	35	18	11599	74922	41	73
11595	72419-2	36	10	11599	74924	41	71
11595	72419-3	35	18	11599	74937	45	13
11595	72419-3	36	10	11599	74937	46	13
11595	72419-4	35	18	11599	74938	45	12
11595	72419-4	36	10	11599	74938	46	12
11595	72419-5	35	18	11599	74942	41	89
11595	72419-5	36	10	11599	74943	45	7
11595	72419-6	35	18	11599	74943	46	7
11595	72419-6	36	10	11599	74947	37	163
11595	72419-7	35	18	11599	74947	38	160
11595	72419-7	36	10	11599	74949	41	66
11595	72419-8	35	18	11599	74950	37	165
11595	72419-8	36	10	11599	74950	38	163
11595	72419-9	36	10	11599	74951	41	13
11595	72645	37	211	11599	74951	48	55
11595	72645	40	8	11599	74952	41	12
11595	73363	38	149	11599	74963	43	46
11595	73822	39	15	11599	74963	44	52
11595	73875	37	58	11599	74965	37	99
11595	73875	38	57	11599	74969	38	98
11595	73877	49	6	11599	74971	37	110
11595	74130	39	35	11599	74971	38	109
11595	74133	39	38	11599	74977	37	25
11595	74134	39	36	11599	74977	38	22
11595	74168	37	116	11599	74978	37	24
11595	74168	38	115	11599	74978	38	21
11595	74633	39	14	11599	74979	37	26
11595	74757	37	115	11599	74979	38	23
11595	74757	38	114	11599	74983	41	168
11595	74758	41	126	11599	74991	41	9
11595	74801	37	114	11599	74991	41	170
11595	74801	38	113	11599	75008	37	189
11595	74823	37	55	11599	75008	38	187
11595	74823	38	54	11599	75012	37	192
11595	74828	37	123	11599	75012	38	190
11595	74828	38	120	11599	75013	37	183
11595	74829	37	213	11599	75013	38	181
11595	74829	43	13	11599	75015	37	191
11595	74830	37	214	11599	75015	38	189
11595	74830	43	11	11599	75018	37	105
11595	74831	37	101	11599	75018	38	104
11595	74831	38	100	11599	75019	37	128

FSCM	PART NUMBER	FIGURE NO.	ITEM NO.	FSCM	PART NUMBER	FIGURE NO.	ITEM NO.
11595	75C19	39	125	11599	751C2	39	66
11595	75C20	37	129	11599	75117	37	201
11595	75C2C	38	126	11599	75117	38	199
11595	75C21	37	133	11599	75122	41	153
11595	75021	38	130	11599	75123	45	33
11595	75C22	37	130	11599	75126	45	20
11595	75022	38	127	11599	75144	37	172
11595	75023	37	132	11599	75144	38	170
11595	75C23	39	129	11599	75151	37	41
11595	75024	37	134	11599	75151	38	38
11595	75C24	38	132	11599	75154	37	44
11595	75025	37	131	11599	75154	38	41
11595	75C25	38	128	11599	75157	37	45
11595	75C35	39	80	11599	75157	38	42
11595	75035	39	83	11599	75167	45	13
11595	75036	43	50	11599	75168	45	26
11595	75036	44	56	11599	75175	35	48
11595	75C37	43	39	11599	75175	36	43
11595	75037	44	45	11599	75176	43	35
11595	75038	41	142	11599	75176	44	43
11595	75C39	41	123	11599	75178	37	205
11595	75046	37	171	11599	75178	38	203
11595	75C46	39	169	11599	75178	40	1
11595	75047	37	206	11599	75195	39	34
11599	75047	43	2	11599	752C3	45	11
11595	75C48	37	213	11599	752C8	37	103
11595	75C48	43	6	11599	752C8	38	102
11595	75C49	37	207	11599	75213	37	162
11595	75C49	43	3	11599	75213	38	162
11599	75C49	41	97	11599	75218	43	9
11595	75C5C	39	96	11599	7522C	41	42
11595	75C50	42	3	11599	75221	41	56
11595	75C5C	43	10	11599	75222	41	60
11595	75C5C	44	13	11599	75223	41	35
11595	75C51	41	101	11599	75242	37	49
11595	75C52	41	98	11599	75242	38	48
11595	75C53	41	88	11599	75242	35	38
11599	75C54	41	45	11599	75243	47	7
11595	75C55	41	46	11599	75243	48	16
11599	75056	41	43	11599	75371	41	147
11595	75C57	35	54	11599	75385	42	14
11595	75057	36	52	11599	75387	41	153
11595	75C58	37	166	11599	75388	41	156
11595	75C58	38	164	11599	75472	35	9
11595	75C59	37	142	11599	75472	36	2
11595	75C59	38	141	11599	75474	35	2
11595	7506C	37	117	11599	755C1	35	23
11595	75C6C	38	117	11599	755C1	36	15
11595	75063	41	86	11599	75502	35	26
11595	75064	42	13	11599	755C2	36	18
11595	75C65	41	116	11599	755C3	39	104
11595	75C70	41	119	11599	75529	41	95
11595	75C71	41	118	11599	75628	39	86
11595	75C72	45	6	11599	75620	39	79
11595	75073	41	10	11599	75645	30	99
11595	75C74	41	164	11599	75655	40	9
11595	75074	43	32	11599	75760	41	111
11595	75C74	44	35	11599	75779	47	29
11595	75075	41	65	11599	75787	43	38
11595	75076	41	30	11599	75787	44	44
11595	75C78	41	48	11599	75756	37	197
11595	75079	44	22	11599	75756	38	195
11595	75C8C	43	17	11599	75757	37	195
11595	75C82	44	23	11599	75757	38	193
11595	75083	41	174	11599	75758	37	198
11595	75C84	43	18	11599	75759	38	196
11595	75C84	44	23	11599	75759	37	196
11595	75C85	41	162	11599	75759	38	194
11595	75C85	39	27	11599	758C4	37	66
11595	75090	41	8	11599	758C4	38	65
11595	75C91	41	3	11599	758C5	37	193
11595	75092	39	32	11599	758C5	38	191
11595	75C92	41	64	11599	75854	35	41
11595	75C93	41	62	11599	75857	39	33
11595	75C94	43	24	11599	75858	41	141
11595	75C94	44	27	11599	75859	37	26
11595	75C95	41	137				
11595	75096	41	106	11599	75860	37	179
11595	75097	43	53	11599	75860	38	176
11595	75097	44	59	11599	75866	41	6

FSCM	PART NUMBER	FIGURE NO.	ITEM NO.	FSCM	PART NUMBER	FIGURE NO.	ITEM NO.
11599	75885	39	26	11599	76721	37	60
11599	75887	39	87	11599	76721	38	59
11599	75970	41	132	11599	76722	37	62
11599	75973	37	102	11599	76722	38	61
11599	75973	38	101	11599	76883	39	72
11599	75977	37	203	11599	76885	41	151
11599	75978	37	204	11599	76886	41	155
11599	75978	38	202	11599	77064	35	52
11599	75979	37	199	11599	77064	36	46
11599	75993	39	64	11599	77079	41	172
11599	76001	39	70	11599	77091	39	65
11599	76034	39	71	11599	77153	41	75
11599	76034	41	154	11599	77153	45	1
11599	76035	39	69	11599	77154	47	31
11599	76080	39	39	11599	77155	47	33
11599	76081	37	50	11599	77173	41	171
11599	76081	38	49	11599	77185	41	163
11599	76123	37	177	11599	77195	41	165
11599	76123	38	175	11599	77285	39	68
11599	76124	37	184	11599	77381	35	11
11599	76124	38	182	11599	77381	36	21
11599	76125	37	186	11599	77382	39	110
11599	76125	38	184	11599	77401	39	23
11599	76126	37	185	11599	77402	39	11
11599	76126	38	183	11599	77403	39	20
11599	76127	41	158	11599	77404	39	89
11599	76129	36	51	11599	77421	37	161
11599	76130	35	55	11599	77421	38	158
11599	76130	36	49	11599	77629	41	19
11599	76131	41	82	11599	77631	41	17
11599	76132	41	81	11599	77632	41	15
11599	76133	41	83	11599	77633	41	14
11599	76133	48	62	11599	77663	39	101
11599	76138	37	121	11599	77664	39	81
11599	76139	37	120	11599	77672	47	30
11599	76140	37	119	11599	77675	47	26
11599	76140	38	118	11599	77677	41	136
11599	76183	49	32	11599	77698	47	34
11599	76209	37	4	11599	77866	39	19
11599	76210	37	2	11599	77867	39	17
11599	76237	39	73	11599	77970	37	15
11599	76249	41	160	11599	77970	38	11
11599	76250	41	159	11599	78106-16	41	33
11599	76253	41	148	11599	78106-2	44	4
11599	76279	47	39	11599	78112-11	48	50
11599	76279	48	67	11599	78112-6	41	29
11599	76280	47	19	11599	78222	37	159
11599	76280	48	30	11599	78222	38	156
11599	76282	39	30	11599	78276	37	111
11599	76283	47	15	11599	78276	38	110
11599	76283	48	24	11599	78277	37	109
11599	76283	48	29	11599	78277	38	108
11599	76285	47	20	11599	78336	37	194
11599	76285	48	25	11599	78336	38	192
11599	76286	47	12	11599	78389	37	145
11599	76286	48	22	11599	78389	38	144
11599	76288	41	113	11599	78390	37	154
11599	76294	47	18	11599	78390	38	150
11599	76294	48	27	11599	78391	37	153
11599	76307	47	14	11599	78392	37	151
11599	76307	48	23	11599	78405	37	8
11599	76316	47	25	11599	78405	38	5
11599	76316	48	36	11599	78406	37	7
11599	76317	47	23	11599	78406	38	4
11599	76333	41	18	11599	78484	37	149
11599	76342	35	39	11599	78750	37	143
11599	76342	47	8	11599	78943	39	63
11599	76342	48	18	11599	78943	41	128
11599	76478	47	11	11599	78944	41	127
11599	76478	48	6	11599	78945	39	62
11599	76478	48	21	11599	78946	39	63
11599	76479	41	105	11599	78948	37	90
11599	76483	36	50	11599	78948	38	89
11599	76672	35	60	11599	78950	37	85
11599	76672	36	30	11599	78950	38	84
11599	76714	37	80	11599	78958	37	91
11599	76714	38	79	11599	78958	38	90
11599	76716	35	35	11599	78961	37	77
11599	76716	47	4	11599	78961	38	76
11599	76716	48	14	11599	78989	37	28

FSCM	PART NUMBER	FIGURE NO.	ITEM NO.	FSCM	PART NUMBER	FIGURE NO.	ITEM NO.
11599	78589	38	25	11599	83866	41	129
11599	79165	37	12	11599	83867	41	128
11599	79165	38	8	11599	83868	41	127
11599	79197	37	152				
11599	79246	37	22	11599	83870	42	15
11599	79246	38	19	11599	84019	48	37
11599	79247	37	29	11599	84019	48	43
11599	79247	38	26				
11599	79280	47	1				
11599	79288	37	13	11599	84226	42	10
11599	79288	38	9	11599	84227	41	148
11599	79293	37	14	11599	84227	42	1
11599	79293	38	10	11599	84230	44	60
11599	79296	37	16	11599	84232	41	176
11599	79296	38	12	11599	84256	48	41
83259	800-530-1-4C9	35	42	11599	84257	48	48
83259	800-530-1-4C9	36	34	11599	84353-002	42	11
11599	80152	41	173	11599	84353-002	43	51
11599	80153	36	26	11599	84353-002	44	57
19203	801560	BULK		11599	84353-005	42	11
11599	80641	41	140	11599	84353-005	43	51
				11599	84353-005	44	57
81996	8115CON024-3	2	3	11599	84353-010	42	11
11599	81196	38	201	11599	84353-010	43	51
11599	81700C6	33	31	11599	84353-010	44	57
11599	81700C6	35	1	11599	84353-020	42	11
11599	818CCA1	33	25	11599	84353-020	43	51
11599	81853	41	26	11599	84353-020	44	57
11599	81856	41	39	11599	84465	49	24
11599	81857	41	68	11599	84466	49	22
11599	81866	41	15	11599	84467	49	23
11599	81870	41	180	11599	84467P003	49	23
11599	82149	41	24	11599	84467P006	49	23
11599	82150	41	22	11599	84467P009	49	23
11599	82151	41	25	18876	8513770	41	74
11599	82152	41	21	11599	85686	47	16
11599	82282	48	44	11599	85686	48	26
11599	82449	37	93	11599	85984	48	61
11599	82449	38	92	11599	86002	48	66
11599	82576	37	92	11599	86003	48	73
11599	82576	38	91	11599	86014	35	16
11599	83401	37	94	11599	86014	36	24
11599	83401	38	93	11599	86722	48	4
11599	83402	37	89	11599	86724	48	2
11599	83402	38	88	11599	86725	36	32
11599	83474	48	9	11599	86725	48	1
11599	83475	36	43	11599	87239	39	46
11599	83479	48	42	11599	87352	37	57
11599	83481	48	11	11599	87352	38	56
11599	83482	48	53	11599	87352	49	1
11599	83483	48	47	11599	87373	41	35
11599	83484	48	51	11599	87429	BULK	
11599	83485	48	45				
11599	83485	48	52	19203	8783476	BULK	
11599	83486	48	58	11599	87890	37	216
11599	83489	48	59	11599	87890	38	205
11599	83490	48	56	11599	87891	37	222
11599	83492	48	60	11599	88953	38	197
				11599	89515	43	30
11599	83496	41	179	11599	89515	44	32
11599	83501	45	3	11599	90447	35	59
11599	83501	46	3	11599	90447	37	1
11599	83532	48	54	11599	91585	36	54
11599	83546	41	32	11599	91585	38	1
11599	83548	46	6	11599	91620	37	47
11599	83550	44	19	11599	91620	38	43
11599	83564	41	20	11599	91949	39	54
11599	83567	41	131	11599	91949	39	52
11599	83624	48	7	11599	91952	39	65
11599	83747	48	46	11599	92412	35	51
11599	83748	48	40	11599	92412	36	45
11599	83758	44	11	11599	93121	41	75
11599	83759	41	14	11599	93121	46	1
11599	83760	47	10	11599	93154	43	45
11599	83760	48	19	11599	93154	44	51
11599	83761	48	34	11599	93155	43	47
				11599	93155	44	50
				78570	94527	63	14
11599	83772	41	27	11599	94565	41	66
11599	83842	38	142	78570	94835-1	BULK	

FSCM	PART NUMBER	FIGURE NO.	ITEM NO.
11599	94965	43	42
11599	94965	44	48
11599	94983	41	102
11599	94983	43	1
11599	94984	41	102
11599	94984	44	1
11599	94987	35	50
11599	94987	41	1
11599	94988	36	44
11599	94988	41	1
11599	95105	41	81
80049	955-4	37	75
80049	955-4	38	74
11599	95857	41	113
11599	96634	44	3
11599	96770	41	60

SUPPLEMENTAL INDICES

NATIONAL STOCK NUMBER AND PART NUMBER INDEX

STOCK NUMBER	FIGURE NO.	ITEM NO.	PART NUMBER	FSCM	FIG NO.	ITEM NO.
2840-00-134-4803	2	2	AN123355	88044	19	
2945-00-893-5601	E57	1	SPT107	94592	E57	1
4810-00-906-2326	59	2	1-140-530-14	91547	19	46
2945-01-115-9547	65	11	26330053	99167	59	2

By Order of the Secretaries of the Army, the Navy, and the Air Force:

E. C. MEYER
General, United States Army
Chief of Staff

Official:

ROBERT M. JOYCE
Brigadier General, United States Army
The Adjutant General

H. D. ARNOLD
Rear Admiral, United States Navy
Commander, Naval Electronic
Systems Command

LEW ALLEN, JR., *General,*
USAF
Chief of Staff

Official:

BRYCE POE II
General, USAF, Commander, Air Force
Logistics Command

DISTRIBUTION:
To be distributed in accordance with DA Form 12-31, Organizational Maintenance Requirements for AH-1G, UH-1B, UH-1C/M, UH-1D/H, and EH-1H aircraft.

☆U.S. GOVERNMENT PRINTING OFFICE: 1989 242-451/03007

RECOMMENDED CHANGES TO EQUIPMENT TECHNICAL PUBLICATIONS

SOMETHING WRONG WITH THIS PUBLICATION?

FROM: (PRINT YOUR UNIT'S COMPLETE ADDRESS)
PFC JOHN DOE
COA, 3d ENGINEER BN
FT. LEONARDWOOD, MO 63108

DATE SENT

PUBLICATION NUMBER	PUBLICATION DATE	PUBLICATION TITLE
TM 55-2840-229-23P	9 Dec 81	RPSTL for Engine, Gas Turbine T53-L-11C, -11D, -13B

BE EXACT. . . PIN-POINT WHERE IT IS

PAGE NO	PARA-GRAPH	FIGURE NO	TABLE NO	IN THIS SPACE TELL WHAT IS WRONG AND WHAT SHOULD BE DONE ABOUT IT:
6	2-1 a			In line 6 of paragraph 2-1a the manual states the engine has 6 Cylinders. The engine on my set only has 4 Cylinders. Change the manual to show 4 Cylinders.
81		4-3		Callout 16 on figure 4-3 is pointing at a bolt. In key to figure 4-3, item 16 is called a shim - Please correct one or the other.
125	line 20			I ordered a gasket, item 19 on figure B-16 by NSN 2910-00-762-3001. I got a gasket but it doesn't fit. Supply says I got what I ordered, so the NSN is wrong. Please give me a good NSN

PRINTED NAME, GRADE OR TITLE, AND TELEPHONE NUMBER	SIGN HERE
JOHN DOE, PFC (268) 317-7111	John Doe JOHN DOE

DA FORM 1 JUL 79 2028-2

PREVIOUS EDITIONS ARE OBSOLETE.

DRSTS-M Overprint 1, 1 Nov 80

P.S.--IF YOUR OUTFIT WANTS TO KNOW ABOUT YOUR RECOMMENDATION MAKE A CARBON COPY OF THIS AND GIVE IT TO YOUR HEADQUARTERS.

FILL IN YOUR UNIT'S ADDRESS

FOLD BACK

DEPARTMENT OF THE ARMY

POSTAGE AND FEES P
DEPARTMENT OF THE A
DOD-314

OFFICIAL BUSINESS

PENALTY FOR PRIVATE USE, $300

Commander
US Army Troop Support and Aviation
Materiel Readiness Command
ATTN: DRSTS-MPSD
4300 Goodfellow Boulevard
St. Louis, MO 63120

FOLD BACK

RECOMMENDED CHANGES TO EQUIPMENT TECHNICAL PUBLICATIONS

SOMETHING WRONG WITH THIS PUBLICATION?

FROM: (PRINT YOUR UNIT'S COMPLETE ADDRESS)

DATE SENT

PUBLICATION NUMBER	PUBLICATION DATE	PUBLICATION TITLE
TM 55-2840-229-23P	9 Dec 81	RPSTL for Engine, Gas Turbine T53-L-11C, -11D, -13B

BE EXACT. . . PIN-POINT WHERE IT IS				IN THIS SPACE TELL WHAT IS WRONG AND WHAT SHOULD BE DONE ABOUT IT:
PAGE NO	PARA-GRAPH	FIGURE NO	TABLE NO	

PRINTED NAME, GRADE OR TITLE, AND TELEPHONE NUMBER

SIGN HERE:

DA FORM 1 JUL 79 2028-2

PREVIOUS EDITIONS ARE OBSOLETE.

DRSTS-M Overprint 2, 1 Nov 80.

P.S.--IF YOUR OUTFIT WANTS TO KNOW ABOUT YOUR RECOMMENDATION MAKE A CARBON COPY OF THIS AND GIVE IT TO YOUR HEADQUARTERS.

FILL IN YOUR UNIT'S ADDRESS

FOLD BACK

DEPARTMENT OF THE ARMY

POSTAGE AND FEES
DEPARTMENT OF THE
DOD-314

OFFICIAL BUSINESS

PENALTY FOR PRIVATE USE, $300

Commander
US Army Troop Support and Aviation
Materiel Readiness Command
ATTN: DRSTS-MPSD
4300 Goodfellow Boulevard
St. Louis, MO 63120

FOLD BACK

RECOMMENDED CHANGES TO EQUIPMENT TECHNICAL PUBLICATIONS

SOMETHING WRONG WITH THIS PUBLICATION?

FROM: (PRINT YOUR UNIT'S COMPLETE ADDRESS)

DATE SENT

PUBLICATION NUMBER	PUBLICATION DATE	PUBLICATION TITLE
TM 55-2840-229-23P	9 Dec 81	RPSTL for Engine, Gas Turbine T53-L-11C, -11D, -13B

BE EXACT . . PIN-POINT WHERE IT IS				IN THIS SPACE TELL WHAT IS WRONG AND WHAT SHOULD BE DONE ABOUT IT:
PAGE NO	PARA-GRAPH	FIGURE NO	TABLE NO	

PRINTED NAME, GRADE OR TITLE, AND TELEPHONE NUMBER	SIGN HERE

DA FORM 1 JUL 79 2028-2

PREVIOUS EDITIONS ARE OBSOLETE.

DRSTS-M Overprint 2, 1 Nov 80.

P.S.--IF YOUR OUTFIT WANTS TO KNOW ABOUT YOUR RECOMMENDATION MAKE A CARBON COPY OF THIS AND GIVE IT TO YOUR HEADQUARTERS

FILL IN YOUR UNIT'S ADDRESS

FOLD BACK

DEPARTMENT OF THE ARMY

POSTAGE AND FEES PAID
DEPARTMENT OF THE ARMY
DOD-314

OFFICIAL BUSINESS
PENALTY FOR PRIVATE USE, $300

Commander
US Army Troop Support and Aviation
Materiel Readiness Command
ATTN: DRSTS-MPSD
4300 Goodfellow Boulevard
St. Louis, MO 63120

FOLD BACK

RECOMMENDED CHANGES TO EQUIPMENT TECHNICAL PUBLICATIONS

SOMETHING WRONG WITH THIS PUBLICATION?

FROM: (PRINT YOUR UNIT'S COMPLETE ADDRESS)

DATE SENT

PUBLICATION NUMBER	PUBLICATION DATE	PUBLICATION TITLE
TM 55-2840-229-23P	9 Dec 81	RPSTL for Engine, Gas Turbine T53-L-11C, -11D, -13B

BE EXACT. . PIN-POINT WHERE IT IS				IN THIS SPACE TELL WHAT IS WRONG AND WHAT SHOULD BE DONE ABOUT IT:
PAGE NO	PARA-GRAPH	FIGURE NO	TABLE NO	

PRINTED NAME, GRADE OR TITLE, AND TELEPHONE NUMBER	SIGN HERE

DA FORM 1 JUL 79 2028-2

PREVIOUS EDITIONS ARE OBSOLETE.

DRSTS-M Overprint 2, 1 Nov 80.

P.S.—IF YOUR OUTFIT WANTS TO KNOW ABOUT YOUR RECOMMENDATION MAKE A CARBON COPY OF THIS AND GIVE IT TO YOUR HEADQUARTERS

FILL IN YOUR
UNIT'S ADDRESS

FOLD BACK

DEPARTMENT OF THE ARMY

POSTAGE AND FEES PAID
DEPARTMENT OF THE ARMY
DOD-314

OFFICIAL BUSINESS

PENALTY FOR PRIVATE USE, $300

Commander
US Army Troop Support and Aviation
Materiel Readiness Command
ATTN: DRSTS-MPSD
4300 Goodfellow Boulevard
St. Louis, MO 63120

FOLD BACK

The Metric System and Equivalents

Linear Measure

1 centimeter = 10 millimeters = .39 inch
1 decimeter = 10 centimeters = 3.94 inches
1 meter = 10 decimeters = 39.37 inches
1 dekameter = 10 meters = 32.8 feet
1 hectometer = 10 dekameters = 328.08 feet
1 kilometer = 10 hectometers = 3,280.8 feet

Weights

1 centigram = 10 milligrams = .15 grain
1 decigram = 10 centigrams = 1.54 grains
1 gram = 10 decigram = .035 ounce
1 dekagram = 10 grams = .35 ounce
1 hectogram = 10 dekagrams = 3.52 ounces
1 kilogram = 10 hectograms = 2.2 pounds
1 quintal = 100 kilograms = 220.46 pounds
1 metric = 10 quintals = 1.1 short tons

Liquid Measure

1 centiliter = 10 milliters = .34 fl. ounce
1 deciliter = 10 centiliters = 3.38 fl. ounces
1 liter = 10 deciliters = 33.81 fl. ounces
1 dekaliter = 10 liters = 2.64 gallons
1 hectoliter = 10 dekaliters = 26.42 gallons
1 kiloliter = 10 hectoliters = 264.18 gallons

Square Measure

1 sq. centimeter = 100 sq. millimeters = .155 sq. inch
1 sq. decimeter = 100 sq. centimeters = 15.5 sq. inches
1 sq. meter (centare) = 100 sq. decimeters = 10.76 sq. feet
1 sq. dekameter (are) = 100 sq. meters = 1,076.4 sq. feet
1 sq. hectometer (hectare) = 100 sq. dekameters = 2.47 acres
1 sq. kilometer = 100 sq. hectometers = .386 sq. mile

Cubic Measure

1 cu. centimeter = 1000 cu. millimeters = .06 cu. inch
1 cu. decimeter = 1000 cu. centimeters = 61.02 cu. inches
1 cu. meter = 1000 cu. decimeters = 35.31 cu. feet

Approximate Conversion Factors

To change	*To*	*Multiply by*
inches	centimeters	2.540
feet	meters	.305
yards	meters	.914
miles	kilometers	1.609
square inches	square centimeters	6.451
square feet	square meters	.093
square yards	square meters	.836
square miles	square kilometers	2.590
acres	square hectometers	.405
cubic feet	cubic meters	.028
cubic yards	cubic meters	.765
fluid ounces	milliliters	29,573
pints	liters	.473
quarts	liters	.946
gallons	liters	3.785
ounces	grams	28.349
pounds	kilograms	.454
short tons	metric tons	.907
pound-feet	newton-meters	1.365
pound-inches	newton-meters	.11375

To change	*To*	*Multiply by*
ounce-inches	newton-meters	.007062
centimeters	inches	.394
meters	feet	3.280
meters	yards	1.094
kilometers	miles	.621
square centimeters	square inches	.155
square meters	square feet	10.764
square meters	square yards	1.196
square kilometers	square miles	.386
square hectometers	acres	2.471
cubic meters	cubic feet	35.315
cubic meters	cubic yards	1.308
milliliters	fluid ounces	.034
liters	pints	2.113
liters	quarts	1.057
liters	gallons	.264
grams	ounces	.035
kilograms	pounds	2.205
metric tons	short tons	1.102

Temperature (Exact)

°F	Fahrenheit temperature	5/9 (after subtracting 32)	Celsius temperature	°C

PIN: 017691-000